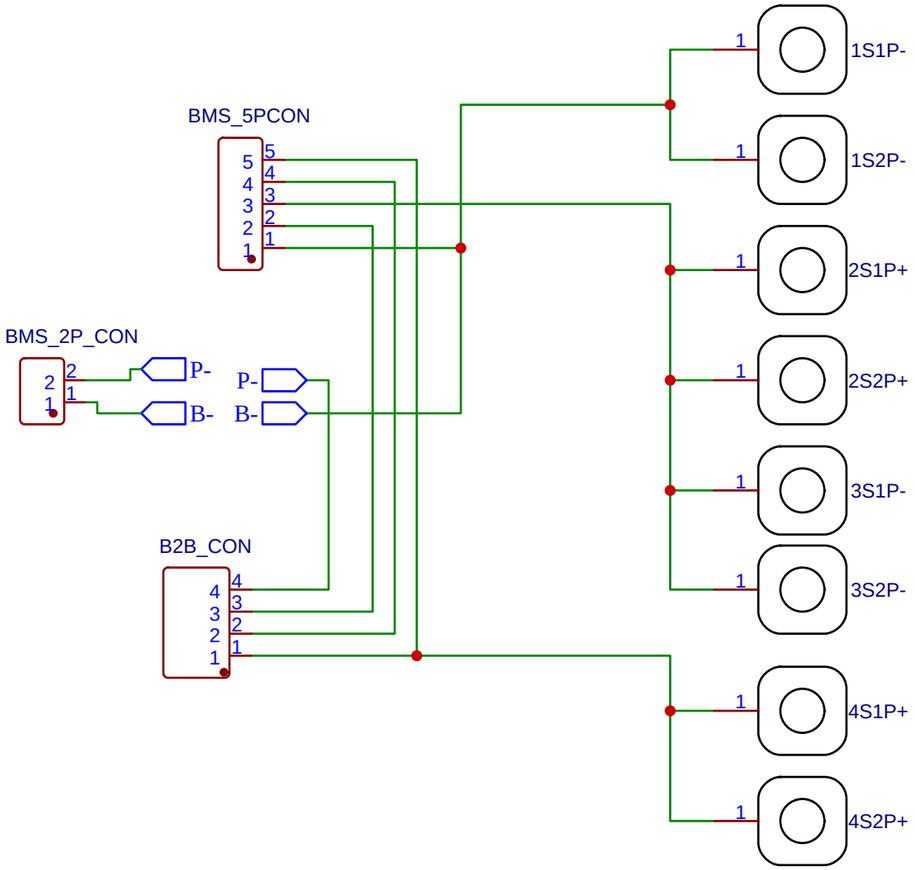

TITLE: Bottom Battery PCB		REV: 1.0
EasyEDA	Company: Sailowtech	Sheet: 1/1
	Date: 2023-11-07 Drawn By:	