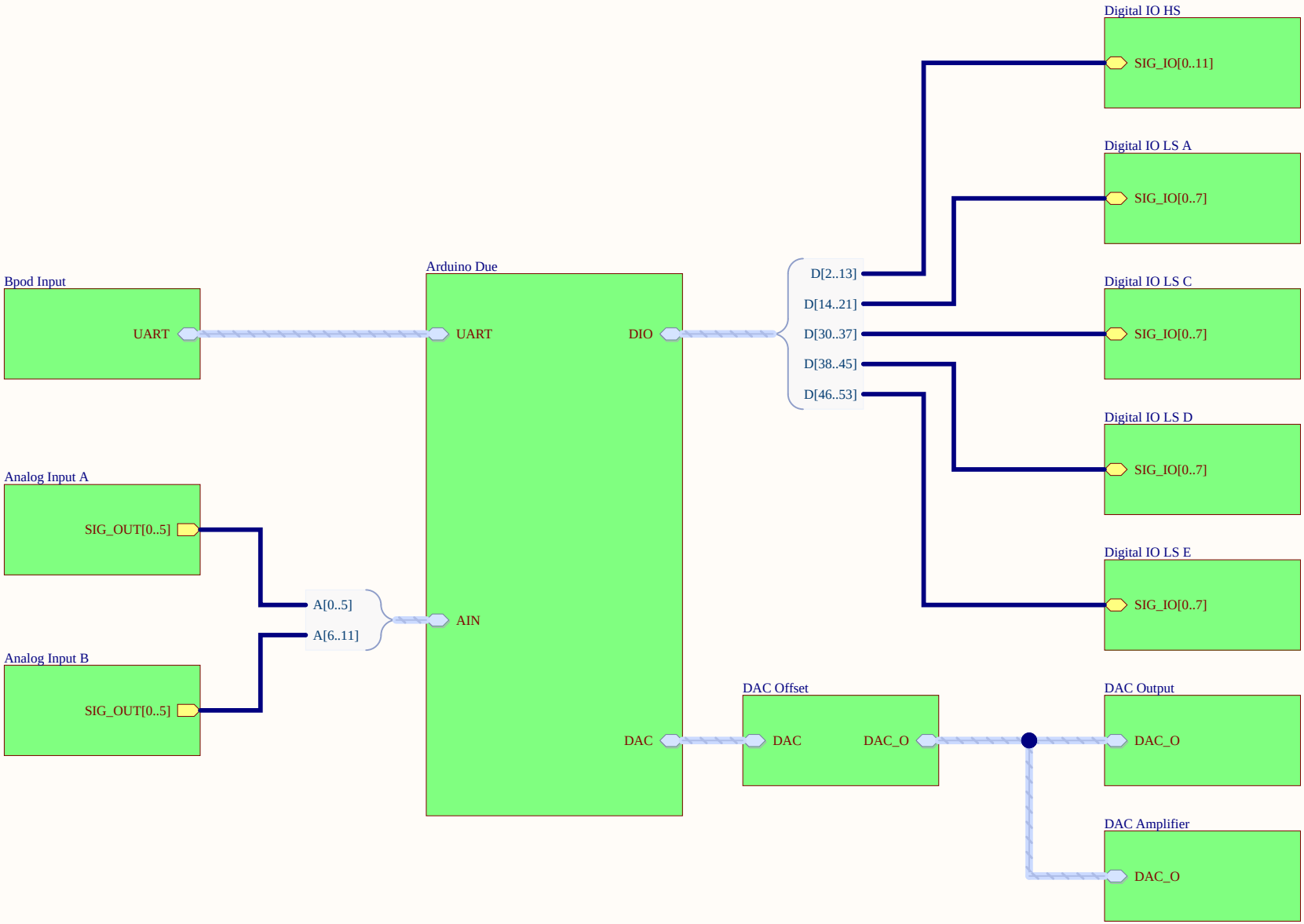

BPod Panel Due

FILE BPod Panel Due.SchDoc		REVISION *	
VARIANT [No Variations]	DATE 28/10/2025	SHEET 1/ 12	
PROJECT BPod Panel Due		SIZE A4	

FabLab
Sainsbury Wellcome Centre
25 Howland Street W1T 4JG
London
www.sainsburywellcome.org

Sainsbury Wellcome Centre

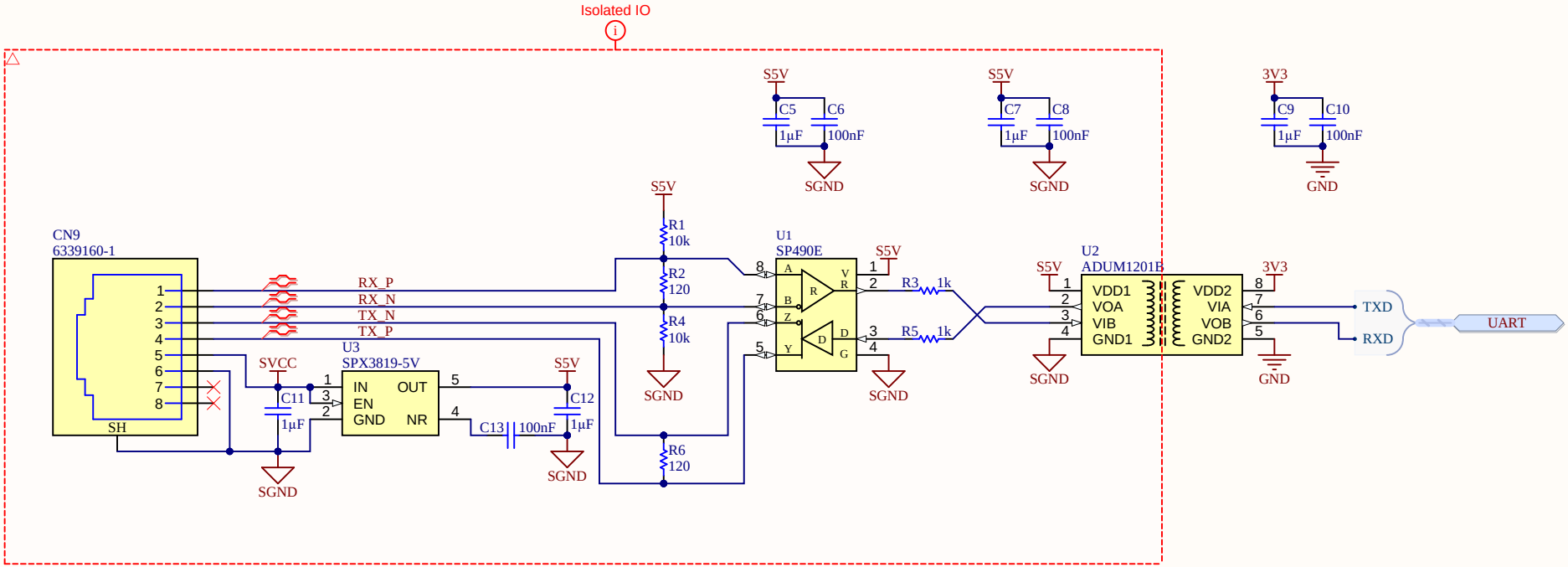

Level Shifter

FILE Bpod Input.SchDoc		REVISION *	
VARIANT [No Variations]	DATE 28/10/2025	SHEET 2 / 12	
PROJECT BPod Panel Due		SIZE A4	

FabLab
Sainsbury Wellcome Centre
25 Howland Street W1T 4JG
London
www.sainsburywellcome.org

Sainsbury Wellcome Centre

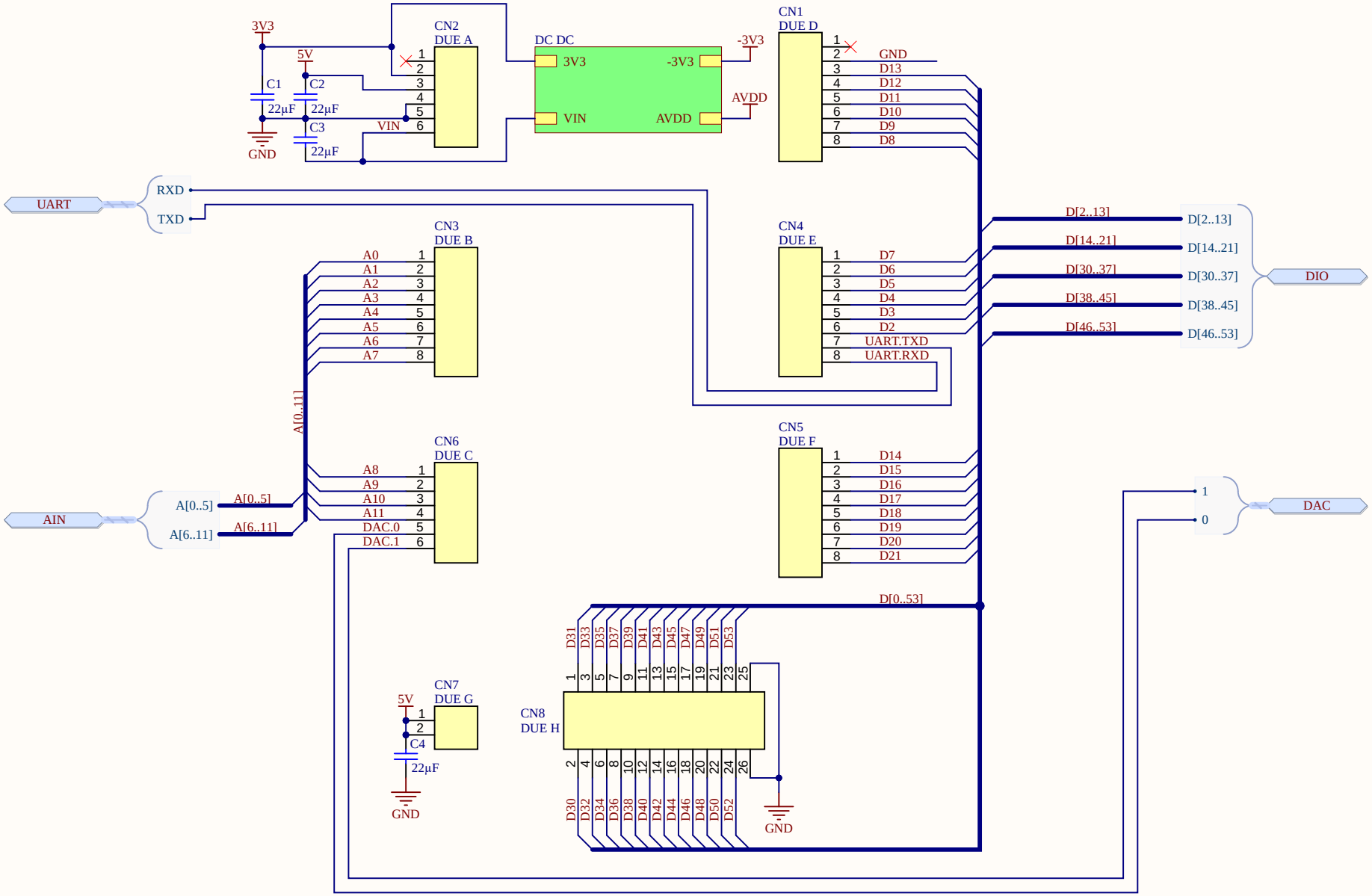

Arduino Due

FILE Arduino Due.SchDoc		REVISION *	
VARIANT [No Variations]	DATE 28/10/2025	SHEET 3 / 12	
PROJECT BPod Panel Due		SIZE A4	

FabLab
Sainsbury Wellcome Centre
25 Howland Street W1T 4JG
London
www.sainsburywellcome.org

Sainsbury Wellcome Centre

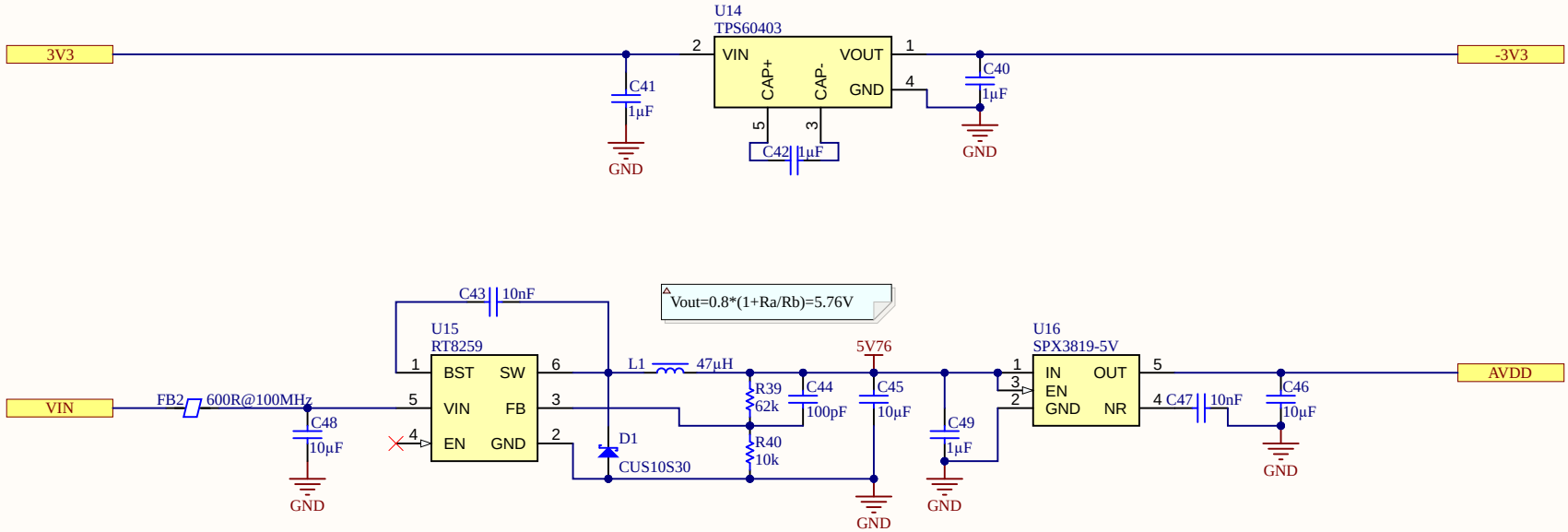

Level Shifter

FILE DC DC.SchDoc		REVISION *	
VARIANT [No Variations]	DATE 28/10/2025	SHEET 4 / 12	
PROJECT BPod Panel Due		SIZE A4	

FabLab
Sainsbury Wellcome Centre
25 Howland Street W1T 4JG
London
www.sainsburywellcome.org

Sainsbury Wellcome Centre

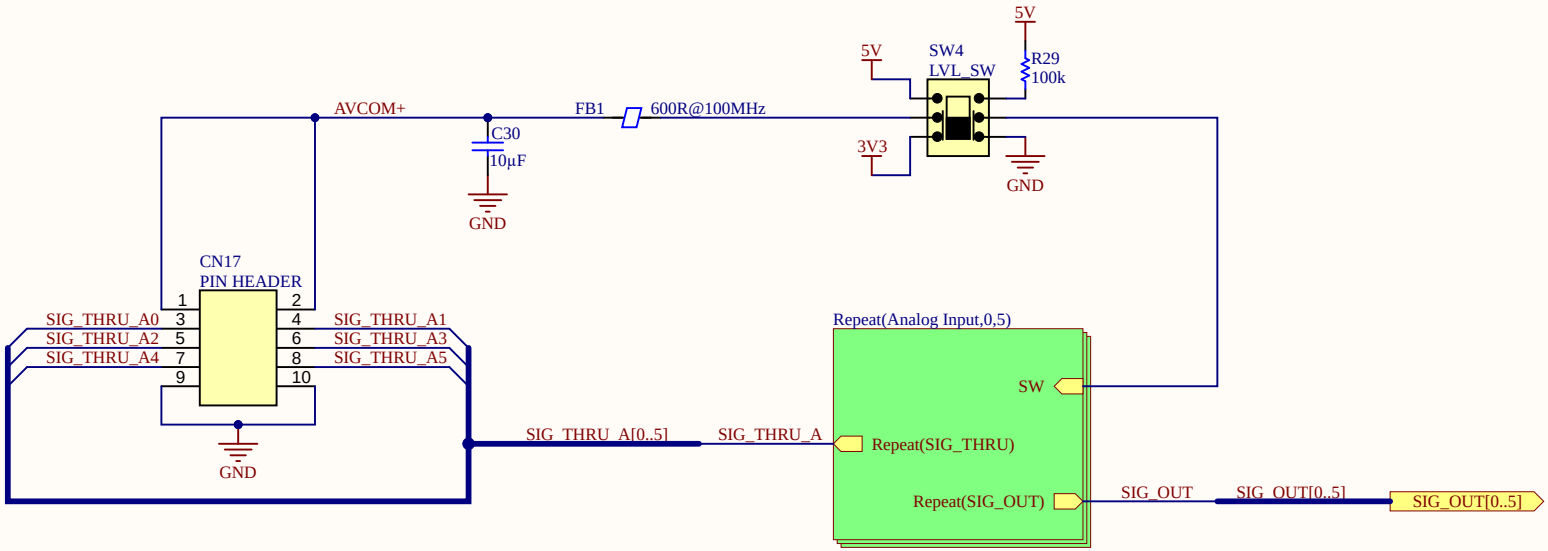

Analog Input A

FILE Analog Input.SchDoc		REVISION *	
VARIANT [No Variations]	DATE 28/10/2025	SHEET 5 / 12	
PROJECT BPod Panel Due		SIZE A4	

FabLab
Sainsbury Wellcome Centre
25 Howland Street W1T 4JG
London
www.sainsburywellcome.org

Sainsbury Wellcome Centre

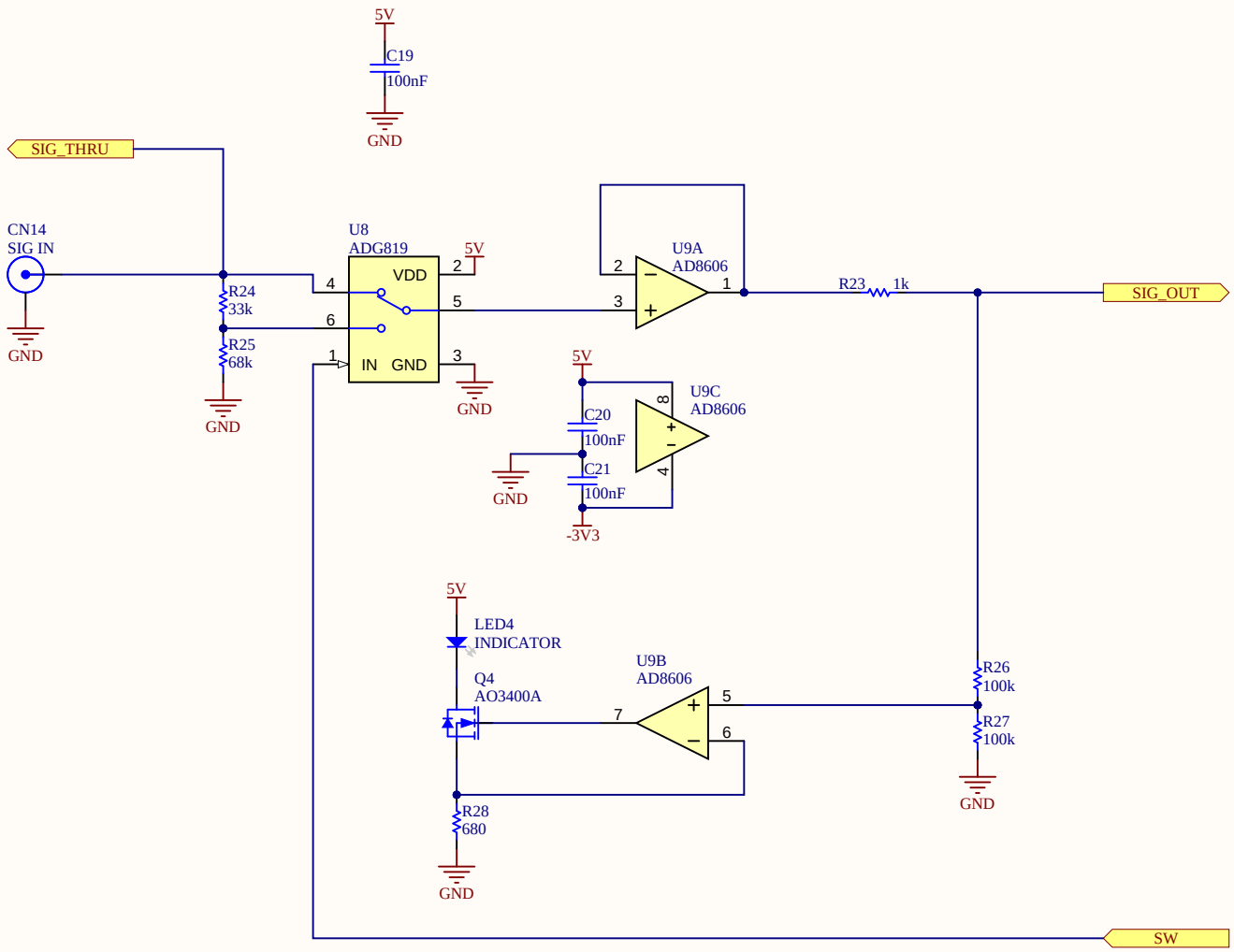

Analog Input A

FILE Analog Input Connector.SchDoc		REVISION *	
VARIANT [No Variations]	DATE 28/10/2025	SHEET 6 / 12	
PROJECT BPod Panel Due		SIZE A4	

FabLab
Sainsbury Wellcome Centre
25 Howland Street W1T 4JG
London
www.sainsburywellcome.org

Sainsbury Wellcome Centre

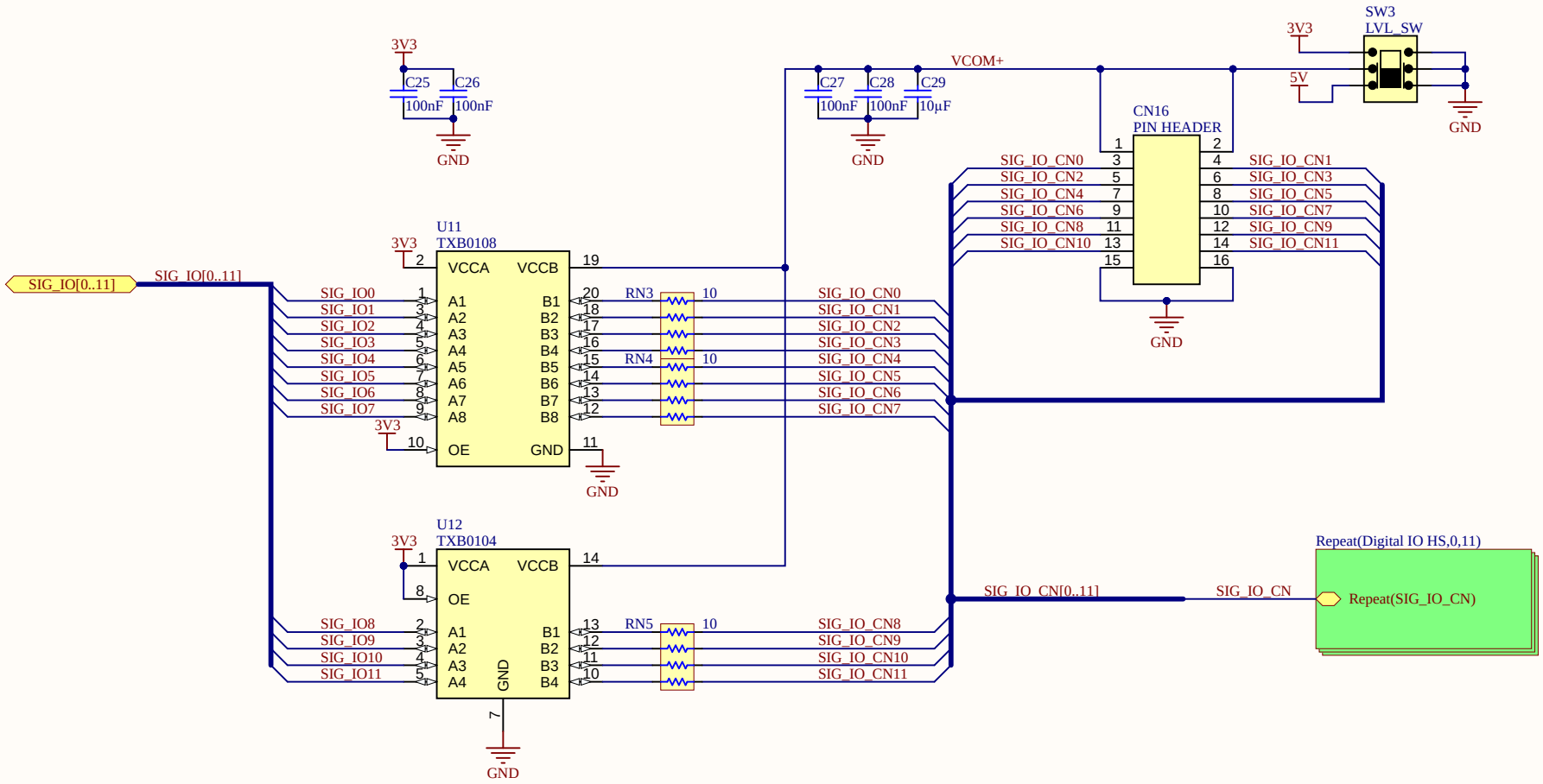

Level Shifter

FILE Digital IO HS.SchDoc		REVISION *	
VARIANT [No Variations]	DATE 28/10/2025	SHEET 7 / 12	
PROJECT BPod Panel Due		SIZE A4	

FabLab
Sainsbury Wellcome Centre
25 Howland Street W1T 4JG
London
www.sainsburywellcome.org

Sainsbury Wellcome Centre

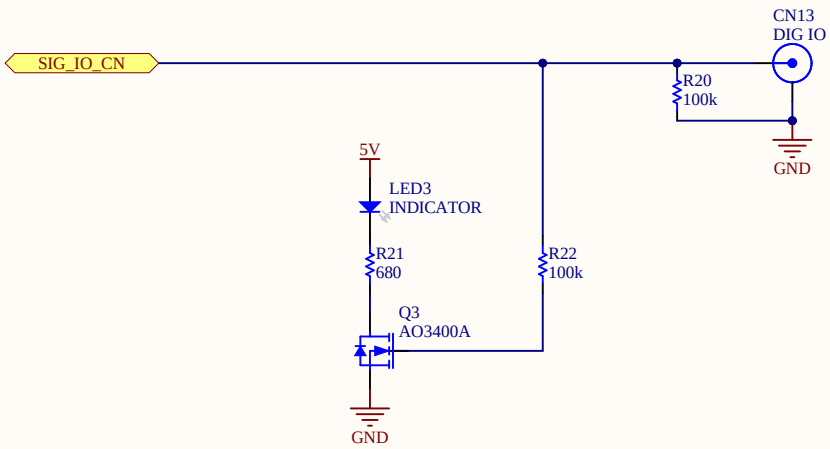

Analog Input A

FILE Digital IO Connector.SchDoc		REVISION *	
VARIANT [No Variations]	DATE 28/10/2025	SHEET 8 / 12	
PROJECT BPod Panel Due		SIZE A4	

FabLab
Sainsbury Wellcome Centre
25 Howland Street W1T 4JG
London
www.sainsburywellcome.org

Sainsbury Wellcome Centre

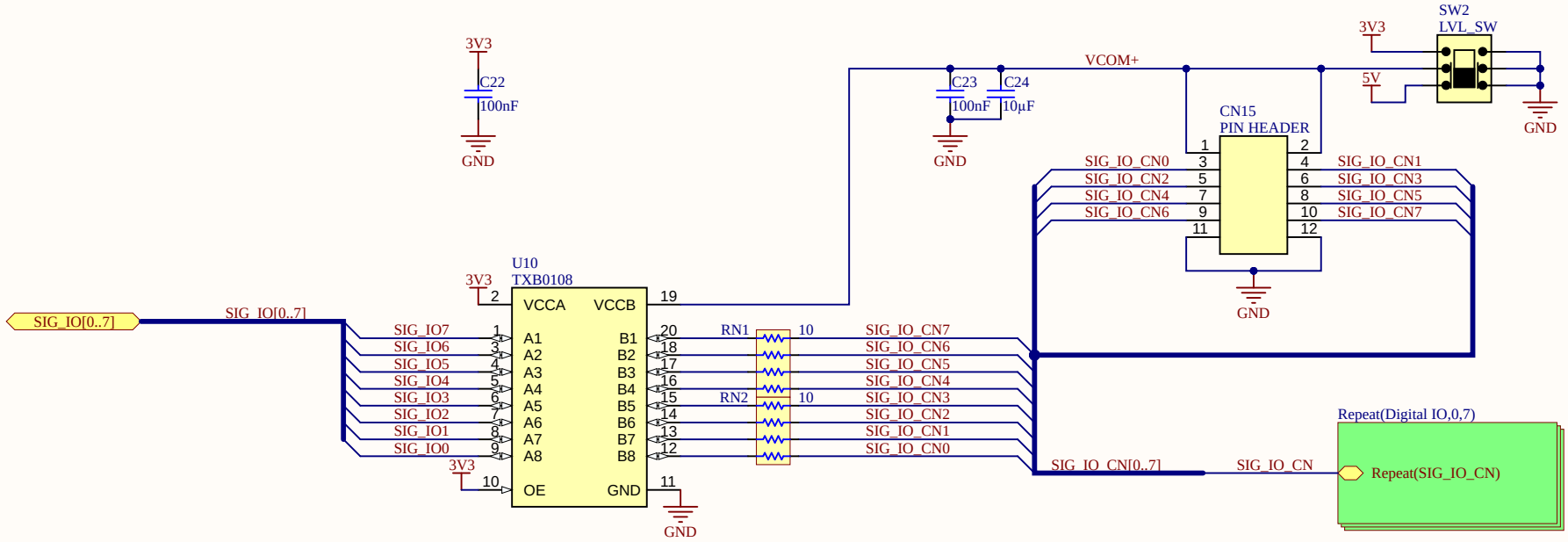

Level Shifter

FILE Digital IO LS.SchDoc		REVISION *	
VARIANT [No Variations]	DATE 28/10/2025	SHEET 9 / 12	
PROJECT BPod Panel Due		SIZE A4	

FabLab
Sainsbury Wellcome Centre
25 Howland Street W1T 4JG
London
www.sainsburywellcome.org

Sainsbury Wellcome Centre

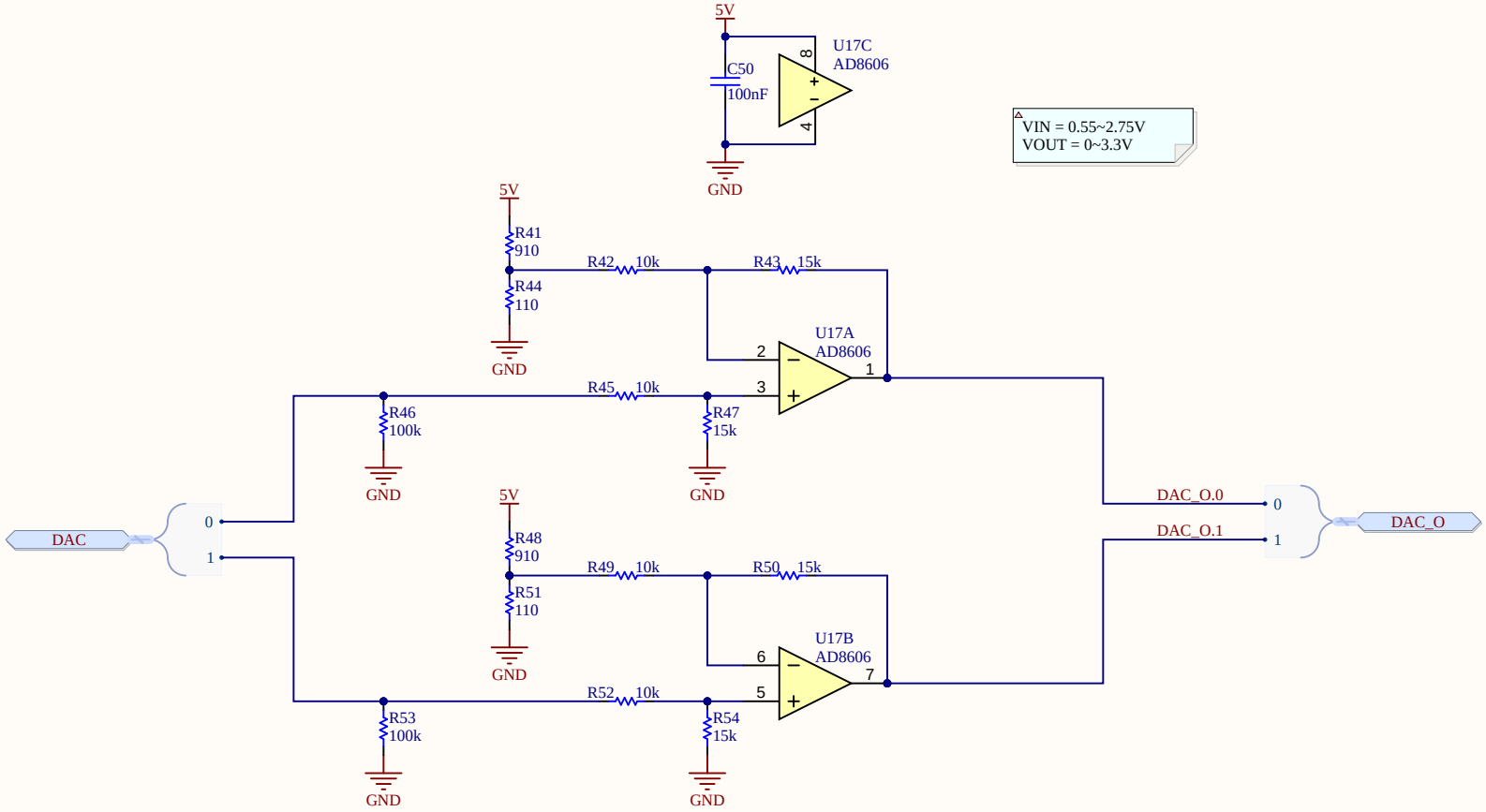

Level Shifter

FILE DAC Offset.SchDoc		REVISION *	
VARIANT [No Variations]	DATE 28/10/2025	SHEET 10 / 12	
PROJECT BPod Panel Due		SIZE A4	

FabLab
Sainsbury Wellcome Centre
25 Howland Street W1T 4JG
London
www.sainsburywellcome.org

Sainsbury Wellcome Centre

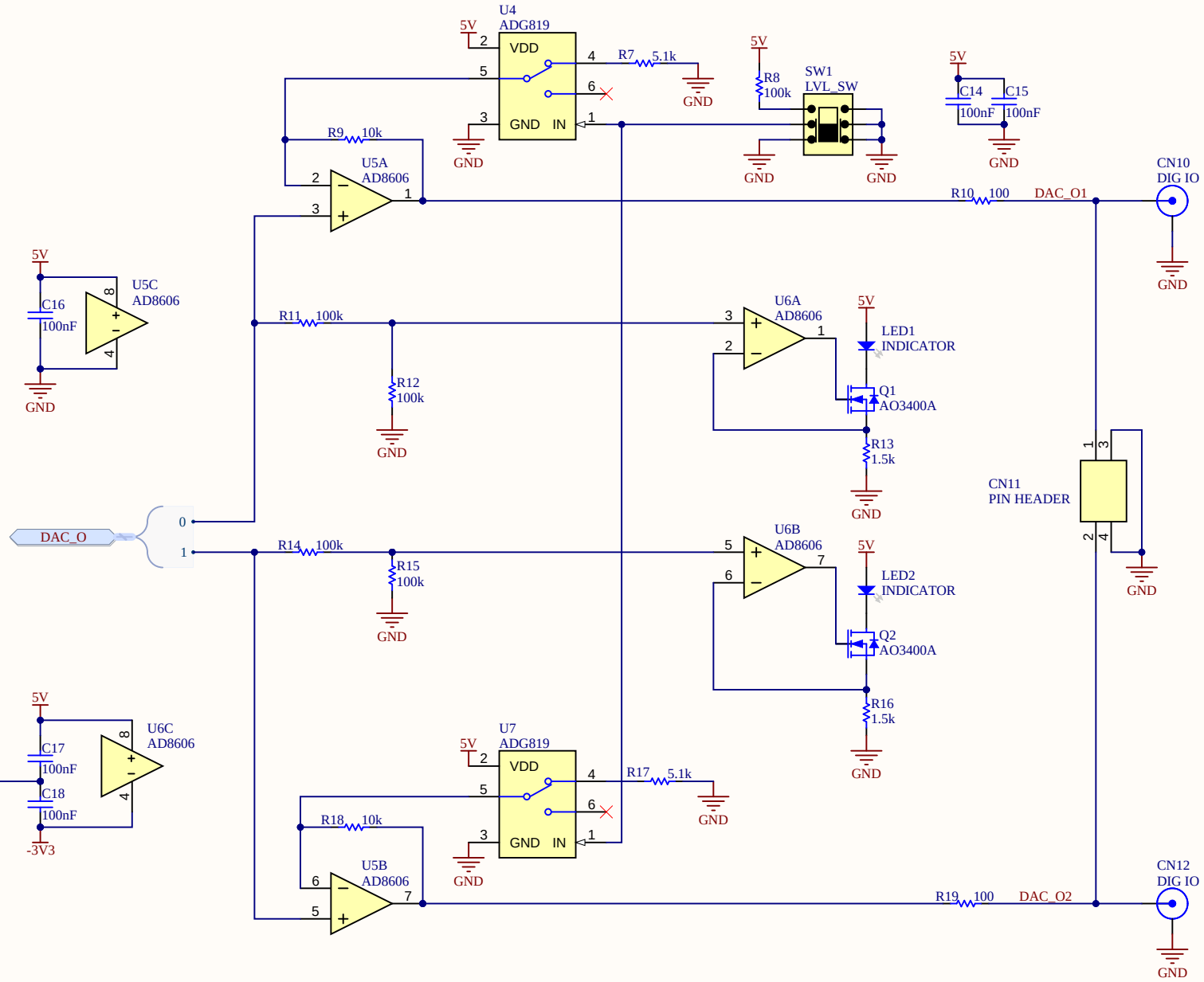

Level Shifter

FILE DAC Output.SchDoc		REVISION *	
VARIANT [No Variations]	DATE 28/10/2025	SHEET 11/ 12	
PROJECT BPod Panel Due		SIZE A4	

FabLab
Sainsbury Wellcome Centre
25 Howland Street W1T 4JG
London
www.sainsburywellcome.org

Sainsbury Wellcome Centre

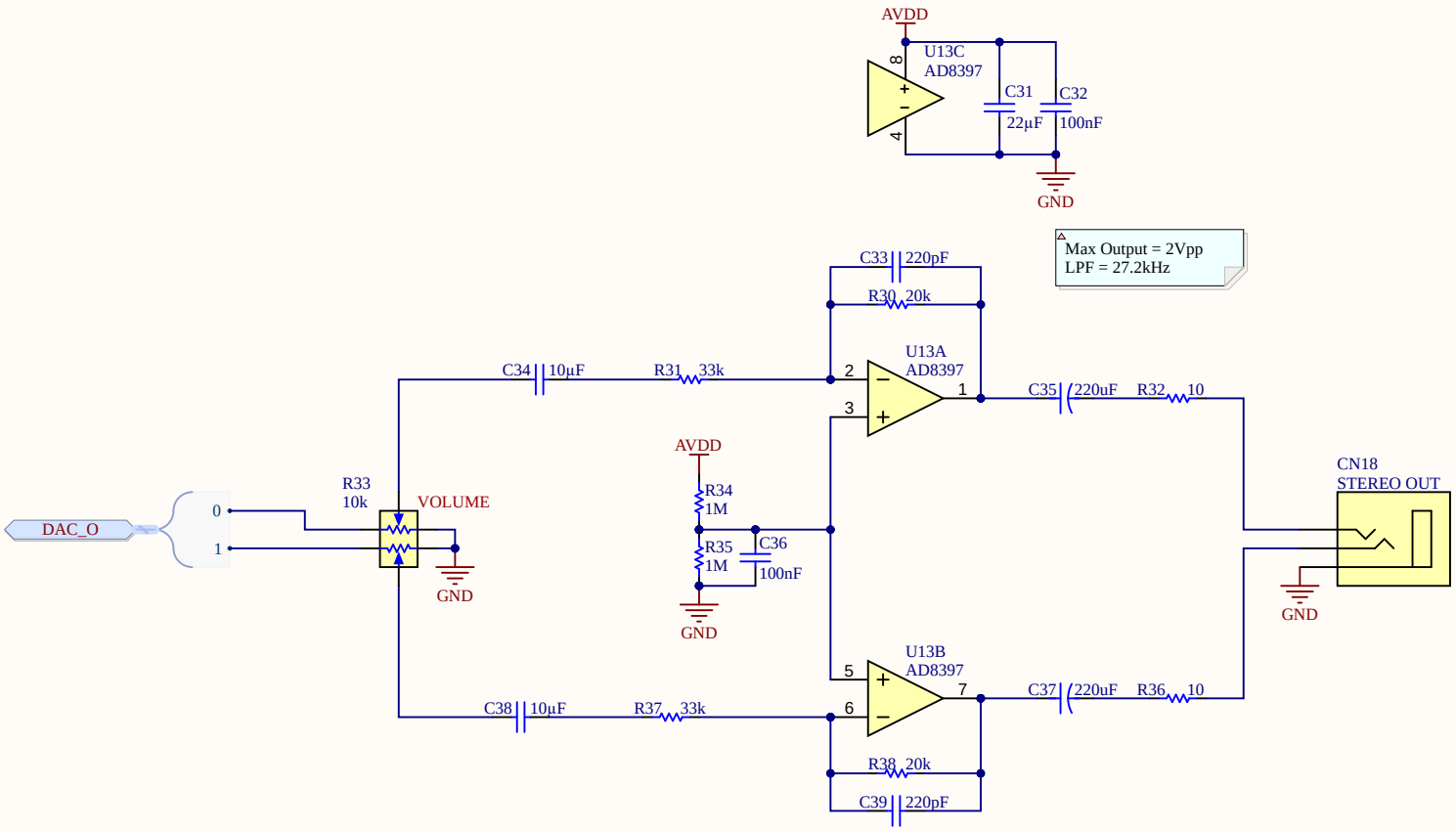

Level Shifter

FILE DAC Amplifier.SchDoc		REVISION *	
VARIANT [No Variations]	DATE 28/10/2025	SHEET 12 / 12	
PROJECT BPod Panel Due		SIZE A4	

FabLab
Sainsbury Wellcome Centre
25 Howland Street W1T 4JG
London
www.sainsburywellcome.org

Sainsbury Wellcome Centre

Top side (Scale 1:1.05)

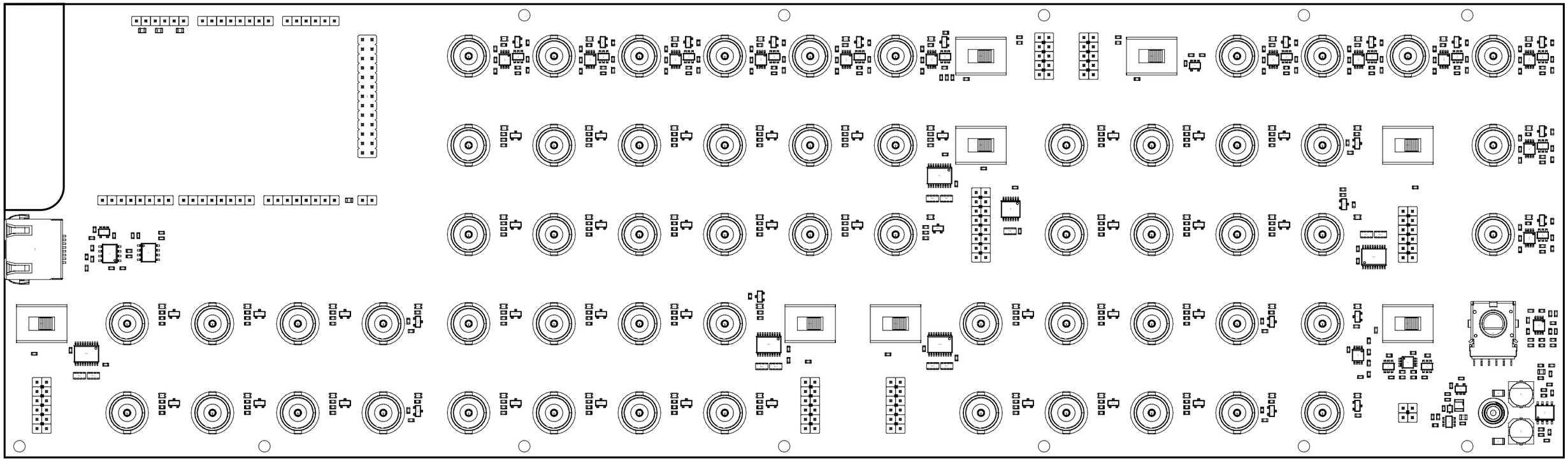

Bill Of Materials (Top)

Designator	Quantity	PartNumber	Value
C1, C2, C3, C4, C31	5	CL21A226MAQNNNE	22µF
C5, C7, C9, C11, C12, C40, C41, C42, C49	9	CL10A105KB8NNNC	1µF
C6, C8, C10, C13, C14, C15, C16, C17, C18, C19_1, C19_2, C19_3, C19_4, C19_5, C19_6, C19_7, C19_8, C19_9, C19_10, C19_11, C19_12, C20_1, C20_2, C20_3, C20_4, C20_5, C20_6, C20_7, C20_8, C20_9, C20_10, C20_11, C20_12, C21_1, C21_2, C21_3, C21_4, C21_5, C21_6, C21_7, C21_8, C21_9, C21_10, C21_11, C21_12, C22_1, C22_2, C22_3, C22_4, C23_1, C23_2, C23_3, C23_4, C25, C26, C27, C28, C32, C36, C50	60	CC0603KRX7R9BB104	100nF
C24_1, C24_2, C24_3, C24_4, C29, C30_1, C30_2, C45, C48	9	GRM188R6YA106MA73D	10µF
C33, C39	2	CL10B221KB8NNNC	220pF
C34, C38, C46	3	CL10A106MA8NRNC	10µF
C35, C37	2	CK1A221M-CRE54	220uF
C43, C47	2	0603B103K500NT	10nF
C44	1	CL10C101JB8NNNC	100pF
CN1, CN3, CN4, CN5	4	PZ254V-11-08P	
CN2, CN6	2	PZ254V-11-06P	
CN7	1	PZ254V-11-02P	
CN8	1	PZ254-2-13-Z-8.5	
CN9	1	6339160-1	

Bill Of Materials (Top)

Designator	Quantity	PartNumber	Value
CN10, CN12, CN13_1, CN13_2, CN13_3, CN13_4, CN13_5, CN13_6, CN13_7, CN13_8, CN13_9, CN13_10, CN13_11, CN13_12, CN13_13, CN13_14, CN13_15, CN13_16, CN13_17, CN13_18, CN13_19, CN13_20, CN13_21, CN13_22, CN13_23, CN13_24, CN13_25, CN13_26, CN13_27, CN13_28, CN13_29, CN13_30, CN13_31, CN13_32, CN13_33, CN13_34, CN13_35, CN13_36, CN13_37, CN13_38, CN13_39, CN13_40, CN13_41, CN13_42, CN13_43, CN13_44, CN14_1, CN14_2, CN14_3, CN14_4, CN14_5, CN14_6, CN14_7, CN14_8, CN14_9, CN14_10, CN14_11, CN14_12	58	112515	
CN11	1	PZ254V-12-4P	
CN15_1, CN15_2, CN15_3, CN15_4	4	PZ254V-12-12P	
CN16	1	PZ254V-12-16P	
CN17_1, CN17_2	2	PZ254V-12-10P	
CN18	1	PJ-3920-3A	
D1	1	CUS10S30,H3F	
FB1_1, FB1_2	2	GZ1608D601TF	600R@100MHz
FB2	1	GZ2012D601TF	600R@100MHz
L1	1	LQW32FT470M0HL	47µH

Bill Of Materials (Top)

Designator	Quantity	PartNumber	Value
CN10, CN12, CN13_1, CN13_2, CN13_3, CN13_4, CN13_5, CN13_6, CN13_7, CN13_8, CN13_9, CN13_10, CN13_11, CN13_12, CN13_13, CN13_14, CN13_15, CN13_16, CN13_17, CN13_18, CN13_19, CN13_20, CN13_21, CN13_22, CN13_23, CN13_24, CN13_25, CN13_26, CN13_27, CN13_28, CN13_29, CN13_30, CN13_31, CN13_32, CN13_33, CN13_34, CN13_35, CN13_36, CN13_37, CN13_38, CN13_39, CN13_40, CN13_41, CN13_42, CN13_43, CN13_44, CN14_1, CN14_2, CN14_3, CN14_4, CN14_5, CN14_6, CN14_7, CN14_8, CN14_9, CN14_10, CN14_11, CN14_12	58	112515	
CN11	1	PZ254V-12-4P	
CN15_1, CN15_2, CN15_3, CN15_4	4	PZ254V-12-12P	
CN16	1	PZ254V-12-16P	
CN17_1, CN17_2	2	PZ254V-12-10P	
CN18	1	PJ-3920-3A	
D1	1	CUS10S30,H3F	
FB1_1, FB1_2	2	GZ1608D601TF	600R@100MHz
FB2	1	GZ2012D601TF	600R@100MHz
L1	1	LQW32FT470M0HL	47µH

BPod Panel Due			Innovation and Research Sainsbury Wellcome Centre 25 Howland Street London W1T 4JG www.sainsburywellcome.org
VARIANT [No Variations]		REVISION 1	
FILE Assembly.PCBDwf		SHEET 1 / 2	
APPR *	DATE 21/08/2025	SIZE A4	
PROJECT BPod Panel Due		SCALE 1:1	

Sainsbury Wellcome Centre

Bill Of Materials (Top)

Designator	Quantity	PartNumber	Value
LED1, LED2, LED3_1, LED3_2, LED3_3, LED3_4, LED3_5, LED3_6, LED3_7, LED3_8, LED3_9, LED3_10, LED3_11, LED3_12, LED3_13, LED3_14, LED3_15, LED3_16, LED3_17, LED3_18, LED3_19, LED3_20, LED3_21, LED3_22, LED3_23, LED3_24, LED3_25, LED3_26, LED3_27, LED3_28, LED3_29, LED3_30, LED3_31, LED3_32, LED3_33, LED3_34, LED3_35, LED3_36, LED3_37, LED3_38, LED3_39, LED3_40, LED3_41, LED3_42, LED3_43, LED3_44, LED4_1, LED4_2, LED4_3, LED4_4, LED4_5, LED4_6, LED4_7, LED4_8, LED4_9, LED4_10, LED4_11, LED4_12	58	KT-0805W	
Q1, Q2, Q3_1, Q3_2, Q3_3, Q3_4, Q3_5, Q3_6, Q3_7, Q3_8, Q3_9, Q3_10, Q3_11, Q3_12, Q3_13, Q3_14, Q3_15, Q3_16, Q3_17, Q3_18, Q3_19, Q3_20, Q3_21, Q3_22, Q3_23, Q3_24, Q3_25, Q3_26, Q3_27, Q3_28, Q3_29, Q3_30, Q3_31, Q3_32, Q3_33, Q3_34, Q3_35, Q3_36, Q3_37, Q3_38, Q3_39, Q3_40, Q3_41, Q3_42, Q3_43, Q3_44, Q4_1, Q4_2, Q4_3, Q4_4, Q4_5, Q4_6, Q4_7, Q4_8, Q4_9, Q4_10, Q4_11, Q4_12	58	AO3400A	
R1, R4, R9, R18, R40, R42, R45, R49, R52	9	0603WAF1002T5E	10k
R2, R6	2	0603WAF1200T5E	120
R3, R5, R23_1, R23_2, R23_3, R23_4, R23_5, R23_6, R23_7, R23_8, R23_9, R23_10, R23_11, R23_12	14	0603WAF1001T5E	1k
R7, R17	2	0603WAF5101T5E	5.1k

Bill Of Materials (Top)

Designator	Quantity	PartNumber	Value
C1, C2, C3, C4, C31	5	CL21A226MAQNNNE	22µF
C5, C7, C9, C11, C12, C40, C41, C42, C49	9	CL10A105KB8NNNC	1µF
C6, C8, C10, C13, C14, C15, C16, C17, C18, C19_1, C19_2, C19_3, C19_4, C19_5, C19_6, C19_7, C19_8, C19_9, C19_10, C19_11, C19_12, C20_1, C20_2, C20_3, C20_4, C20_5, C20_6, C20_7, C20_8, C20_9, C20_10, C20_11, C20_12, C21_1, C21_2, C21_3, C21_4, C21_5, C21_6, C21_7, C21_8, C21_9, C21_10, C21_11, C21_12, C22_1, C22_2, C22_3, C22_4, C23_1, C23_2, C23_3, C23_4, C25, C26, C27, C28, C32, C36, C50	60	CC0603KRX7R9BB104	100nF
C24_1, C24_2, C24_3, C24_4, C29, C30_1, C30_2, C45, C48	9	GRM188R6YA106MA73D	10µF
C33, C39	2	CL10B221KB8NNNC	220pF
C34, C38, C46	3	CL10A106MA8NRNC	10µF
C35, C37	2	CK1A221M-CRE54	220uF
C43, C47	2	0603B103K500NT	10nF
C44	1	CL10C101JB8NNNC	100pF
CN1, CN3, CN4, CN5	4	PZ254V-11-08P	
CN2, CN6	2	PZ254V-11-06P	
CN7	1	PZ254V-11-02P	
CN8	1	PZ254-2-13-Z-8.5	
CN9	1	6339160-1	

BPod Panel Due			
VARIANT [No Variations]		REVISION 1	
FILE Assembly.PCBDwf		SHEET 2 / 2	
APPR *	DATE 21/08/2025	SIZE A4	
PROJECT BPod Panel Due		SCALE 1:1	

Innovation and Research
Sainsbury Wellcome Centre
25 Howland Street
London
W1T 4JG
www.sainsburywellcome.org

Sainsbury Wellcome Centre

Layer Stack Legend

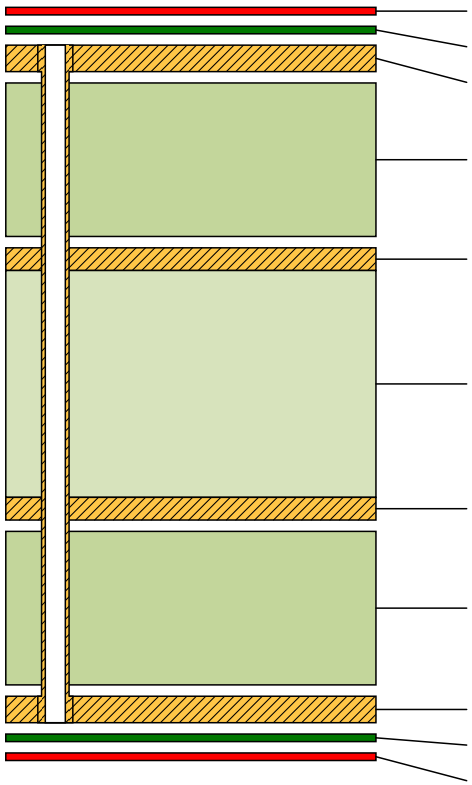

Material	Layer	Thickness	Dielectric Material	Type	Gerber
	Top Overlay			Legend	GTO
Surface Material	Top Solder	0.0046mm	Solder Resist	Solder Mask	GTS
Copper	Top Layer	0.0350mm		Signal	GTL
Prepreg		*0.2030mm*	*7628*	*Dielectric*	
Copper	Layer 2	0.0300mm		Signal	G1
Core		*1.0350mm*	*FR-4*	*Dielectric*	
Copper	Layer 3	0.0300mm		Signal	G2
Prepreg		*0.2030mm*	*7628*	*Dielectric*	
Copper	Bottom Layer	0.0350mm		Signal	GBL
Surface Material	Bottom Solder	0.0046mm	Solder Resist	Solder Mask	GBS
	Bottom Overlay			Legend	GBO

Total thickness: 1.5801mm

BPod Panel Due			Innovation and Research Sainsbury Wellcome Centre 25 Howland Street London W1T 4JG www.sainsburywellcome.org
VARIANT [No Variations]		REVISION 1	
FILE Fabrication.PCBDwf		SHEET 1 / 2	
APPR *	DATE 21/08/2025	SIZE A4	
PROJECT BPod Panel Due		SCALE 5:2	

Sainsbury Wellcome Centre

Drill Table (Top - Bot)

Symbol	Count	Hole Size	Plated	Hole Tolerance
	6	0.2000mm	Plated	
	522	0.3048mm	Plated	
	169	0.8000mm	Plated	
	58	1.0000mm	Plated	
	48	1.1000mm	Plated	
	232	1.5000mm	Plated	
	2	2.1000mm	Plated	
	12	3.2000mm	Non-Plated	
	2	3.2000mm	Plated	
	1051 Total			

Drill Drawing View (Top - Bot)

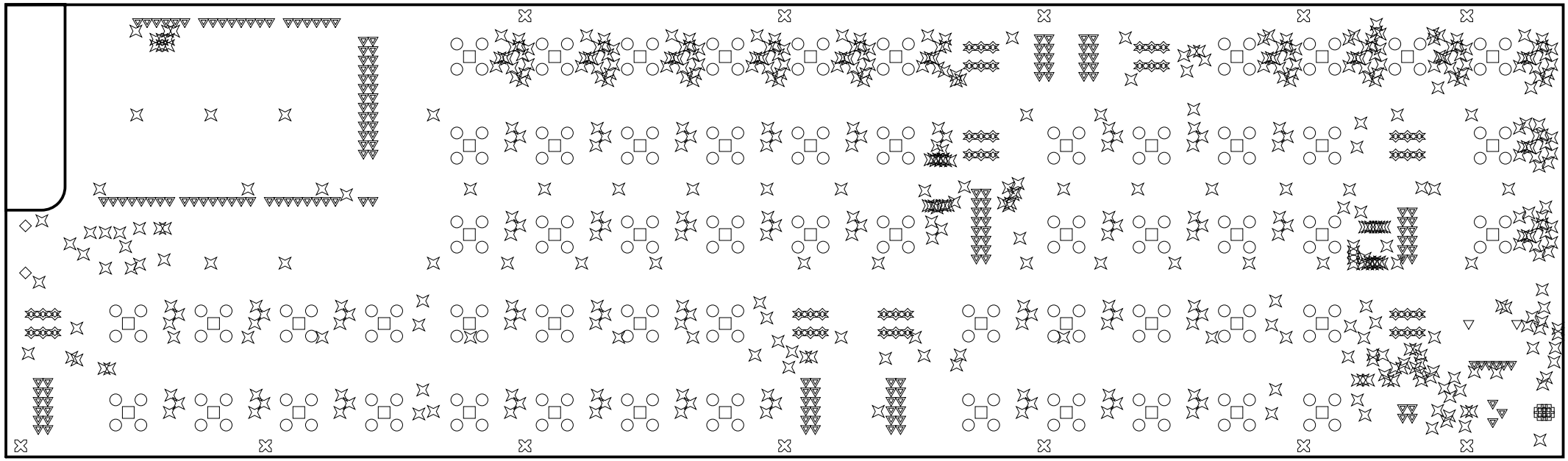

BPod Panel Due		
VARIANT [No Variations]		REVISION 1
FILE Fabrication.PCBDwf		SHEET 2 / 2
APPR *	DATE 21/08/2025	SIZE A4
PROJECT BPod Panel Due		SCALE 5:2

Sainsbury Wellcome Centre

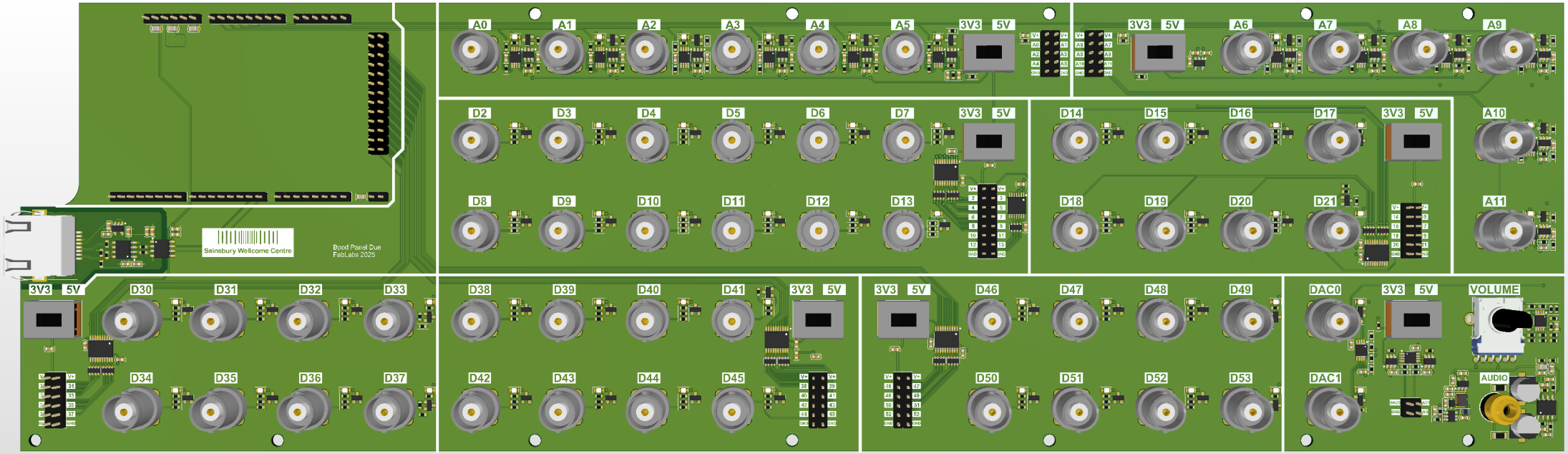
A0
A1
A2
A3
A4
A5
3V3
5V
A6
A7
A8
A9
D2
D3
D4
D5
D6
D7
D8
D9
D10
D11
D12
D13
D14
D15
D16
D17
D18
D19
D20
D21
A10
A11
Sainsbury Wellcome Centre
Bpod Panel Due
FabLabs 2025
D30
D31
D32
D33
D34
D35
D36
D37
D38
D39
D40
D41
D42
D43
D44
D45
D46
D47
D48
D49
D50
D51
D52
D53
DAC0
DAC1
VOLUME
AUDIO

Designator	Quantity	Value	PartNumber	Description	Footprint	LCSC Part N.
C1, C2, C3, C4, C31	5	22uF	CL21A226MAQNNNE	0805 Multilayer Ceramic Capacitors MLCC	CAP_CHIP_0805	C45783
C5, C7, C9, C11, C12, C40, C41, C42, C49	9	1uF	CL10A105KB8NNNC	0603 Multilayer Ceramic Capacitors MLCC	CAP_CHIP_0603	C15849
C6, C8, C10, C13, C14, C15, C16, C17, C18, C19_1, C19_2, C19_3, C19_4, C19_5, C19_6, C19_7, C19_8, C19_9, C19_10, C19_11, C19_12, C20_1, C20_2, C20_3, C20_4, C20_5, C20_6, C20_7, C20_8, C20_9, C20_10, C20_11, C20_12, C21_1, C21_2, C21_3, C21_4, C21_5, C21_6, C21_7, C21_8, C21_9, C21_10, C21_11, C21_12, C22_1, C22_2, C22_3, C22_4, C23_1, C23_2, C23_3, C23_4, C25, C26, C27, C28, C32, C36, C50	60	100nF	CC0603KRX7R9BB104	0603 Multilayer Ceramic Capacitors MLCC	CAP_CHIP_0603	C14663
C24_1, C24_2, C24_3, C24_4, C29, C30_1, C30_2, C45, C48	9	10uF	GRM188R61YA106MA73D	Ceramic Capacitor, Multilayer, Ceramic, 35V, 20%+Tol, 20%-Tol, X5R, 15%TC, 10uF, Surface Mount, 0603	CAP_CHIP_0603	C194427
C33, C39	2	220pF	CL10B221KB8NNNC	0603 Multilayer Ceramic Capacitors MLCC	CAP_CHIP_0603	C1603
C34, C38, C46	3	10uF	CL10A106MA8NRNC	0603 Multilayer Ceramic Capacitors MLCC	CAP_CHIP_0603	C96446
C35, C37	2	220uF	CK1A221M-CRE54	10µF±20%50VSMD Aluminum Electrolytic Capacitor Surface Mount D	ECAP_SMD_6.3X5.4	C18214277
C43, C47	2	10nF	0603B103K500NT	0603 Multilayer Ceramic Capacitors MLCC	CAP_CHIP_0603	C57112
C44	1	100pF	CL10C101JB8NNNC	0603 Multilayer Ceramic Capacitors MLCC	CAP_CHIP_0603	C14858
CN1, CN3, CN4, CN5	4		PZ254V-11-08P	Straight Policy 2.5mm 8P 6mm -40°C~+105°C 3mm 2.54mm Single Row Black Brass 1x10P Plugin,P=2.54mm Pin Headers ROHS	PIN_2.54_1X8P	C492407
CN2, CN6	2		PZ254V-11-06P	Straight Policy 2.5mm 6P 6mm -40°C~+105°C 3mm 2.54mm Single Row Black Brass 1x10P Plugin,P=2.54mm Pin Headers ROHS	PIN_2.54_1X6P	C492405
CN7	1		PZ254V-11-02P	Straight Policy 2.5mm 6P 6mm -40°C~+105°C 3mm 2.54mm Single Row Black Brass 1x10P Plugin,P=2.54mm Pin Headers ROHS	PIN_2.54_1X2P	C492401
CN8	1		PZ254-2-13-Z-8.5	Straight Policy 2.5mm 6mm -40°C~+105°C 3mm 2.54mm Double Row Black Brass 2.54mm Plugin,P=2.54mm Pin Headers	PIN_2.54_2X13P	C2894974
CN9	1		6339160-1	CONN MOD JACK 8P8C RA SHIELDED	6339160-1	C125076
CN10, CN12, CN13_1, CN13_2, CN13_3, CN13_4, CN13_5, CN13_6, CN13_7, CN13_8, CN13_9, CN13_10, CN13_11, CN13_12, CN13_13, CN13_14, CN13_15, CN13_16, CN13_17, CN13_18, CN13_19, CN13_20, CN13_21, CN13_22, CN13_23, CN13_24, CN13_25, CN13_26, CN13_27, CN13_28, CN13_29, CN13_30, CN13_31, CN13_32, CN13_33, CN13_34, CN13_35, CN13_36, CN13_37, CN13_38, CN13_39, CN13_40, CN13_41, CN13_42, CN13_43, CN13_44, CN14_1, CN14_2, CN14_3, CN14_4, CN14_5, CN14_6, CN14_7, CN14_8, CN14_9, CN14_10, CN14_11, CN14_12	58		112515	RF BNC Connector, Female, Board Mount, Solder Terminal, Jack	BNC-AMP-112515	C3176191
CN11	1		PZ254V-12-4P	Straight Policy 2.5mm 6mm -40°C~+105°C 3mm 2.54mm Double Row Black Brass 2.54mm Plugin,P=2.54mm Pin Headers	PIN_2.54_2X2P	C492419
CN15_1, CN15_2, CN15_3, CN15_4	4		PZ254V-12-12P	Straight Policy 2.5mm 6mm -40°C~+105°C 3mm 2.54mm Double Row Black Brass 2.54mm Plugin,P=2.54mm Pin Headers	PIN_2.54_2X6P	C492423
CN16	1		PZ254V-12-16P	Straight Policy 2.5mm 6mm -40°C~+105°C 3mm 2.54mm Double Row Black Brass 2.54mm Plugin,P=2.54mm Pin Headers	PIN_2.54_2X8P	C492425
CN17_1, CN17_2	2		PZ254V-12-10P	Straight Policy 2.5mm 6mm -40°C~+105°C 3mm 2.54mm Double Row Black Brass 2.54mm Plugin,P=2.54mm Pin Headers	PIN_2.54_2X5P	C492422
CN18	1		PJ-3920-3A	3.5mm Headphone Jack 30V 500mA Plugin Audio Connectors	PJ-3920	C707259
D1	1		CUS10S30,H3F	Rectifier Diode, Schottky, 1 Phase, 1 Element, 1A, 30V V(RRM), Silicon	SOD323	C146335
FB1_1, FB1_2	2	600R@100MHz	GZ1608D601TF	Ferrite Chip, 1 Function(s), 0.2A, 2 Pin(s)	FB_CHIP_0603	C1002
FB2	1	600R@100MHz	GZ2012D601TF	Ferrite Chip, 1 Function(s), 0.5A, 2 Pin(s)	FB_CHIP_0805	C1017
L1	1	47uH	LQW32FT470M0HL	Inductor Power Chip Shielded Wirewound 47uH 20% 1MHz Ferrite 0.5A 0.9Ohm DCR 1210 Automotive T/R	IND_PWR_1210	C907956
LED1, LED2, LED3_1, LED3_2, LED3_3, LED3_4, LED3_5, LED3_6, LED3_7, LED3_8, LED3_9, LED3_10, LED3_11, LED3_12, LED3_13, LED3_14, LED3_15, LED3_16, LED3_17, LED3_18, LED3_19, LED3_20, LED3_21, LED3_22, LED3_23, LED3_24, LED3_25, LED3_26, LED3_27, LED3_28, LED3_29, LED3_30, LED3_31, LED3_32, LED3_33, LED3_34, LED3_35, LED3_36, LED3_37, LED3_38, LED3_39, LED3_40, LED3_41, LED3_42, LED3_43, LED3_44, LED4_1, LED4_2, LED4_3, LED4_4, LED4_5, LED4_6, LED4_7, LED4_8, LED4_9, LED4_10, LED4_11, LED4_12	58		KT-0805W	White 0805 Light Emitting Diodes (LED) ROHS	LED_CHIP_0805	C34499
Q1, Q2, Q3_1, Q3_2, Q3_3, Q3_4, Q3_5, Q3_6, Q3_7, Q3_8, Q3_9, Q3_10, Q3_11, Q3_12, Q3_13, Q3_14, Q3_15, Q3_16, Q3_17, Q3_18, Q3_19, Q3_20, Q3_21, Q3_22, Q3_23, Q3_24, Q3_25, Q3_26, Q3_27, Q3_28, Q3_29, Q3_30, Q3_31, Q3_32, Q3_33, Q3_34, Q3_35, Q3_36, Q3_37, Q3_38, Q3_39, Q3_40, Q3_41, Q3_42, Q3_43, Q3_44, Q4_1, Q4_2, Q4_3, Q4_4, Q4_5, Q4_6, Q4_7, Q4_8, Q4_9, Q4_10, Q4_11, Q4_12	58		AO3400A	30V 5.7A 26.5mΩ@±10V,5.7A 1.4W 1.5V@250uA 1 N Channel SOT-23-3L MOSFETs	SOT23	C20917
R1, R4, R9, R18, R40, R42, R45, R49, R52	9	10k	0603WAF1002T5E	100mW Thick Film Resistors 75V ±100ppm/°C ±1% 0603 Chip Resistor	RES_CHIP_0603	C25804
R2, R6	2	120	0603WAF1200T5E	100mW Thick Film Resistors 75V ±100ppm/°C ±1% 0603 Chip Resistor	RES_CHIP_0603	C22787
R3, R5, R23_1, R23_2, R23_3, R23_4, R23_5, R23_6, R23_7, R23_8, R23_9, R23_10, R23_11, R23_12	14	1k	0603WAF1001T5E	100mW Thick Film Resistors 75V ±100ppm/°C ±1% 0603 Chip Resistor	RES_CHIP_0603	C21190
R7, R17	2	5.1k	0603WAF5101T5E	100mW Thick Film Resistors 75V ±100ppm/°C ±1% 0603 Chip Resistor	RES_CHIP_0603	C23186
R8, R11, R12, R14, R15, R20_1, R20_2, R20_3, R20_4, R20_5, R20_6, R20_7, R20_8, R20_9, R20_10, R20_11, R20_12, R20_13, R20_14, R20_15, R20_16, R20_17, R20_18, R20_19, R20_20, R20_21, R20_22, R20_23, R20_24, R20_25, R20_26, R20_27, R20_28, R20_29, R20_30, R20_31, R20_32, R20_33, R20_34, R20_35, R20_36, R20_37, R20_38, R20_39, R20_40, R20_41, R20_42, R20_43, R20_44, R22_1, R22_2, R22_3, R22_4, R22_5, R22_6, R22_7, R22_8, R22_9, R22_10, R22_11, R22_12, R22_13, R22_14, R22_15, R22_16, R22_17, R22_18, R22_19, R22_20, R22_21, R22_22, R22_23, R22_24, R22_25, R22_26, R22_27, R22_28, R22_29, R22_30, R22_31, R22_32, R22_33, R22_34, R22_35, R22_36, R22_37, R22_38, R22_39, R22_40, R22_41, R22_42, R22_43, R22_44, R26_1, R26_2, R26_3, R26_4, R26_5, R26_6, R26_7, R26_8, R26_9, R26_10, R26_11, R26_12, R27_1, R27_2, R27_3, R27_4, R27_5, R27_6, R27_7, R27_8, R27_9, R27_10, R27_11, R27_12, R29_1, R29_2, R46, R53	121	100k	0603WAF1003T5E	100mW Thick Film Resistors 75V ±100ppm/°C ±1% 0603 Chip Resistor	RES_CHIP_0603	C25803
R10, R19	2	100	0603WAF1000T5E	100mW Thick Film Resistors 75V ±100ppm/°C ±1% 0603 Chip Resistor	RES_CHIP_0603	C22775
R13, R16	2	1.5k	0603WAF1501T5E	100mW Thick Film Resistors 75V ±100ppm/°C ±1% 0603 Chip Resistor	RES_CHIP_0603	C22843
R21_1, R21_2, R21_3, R21_4, R21_5, R21_6, R21_7, R21_8, R21_9, R21_10, R21_11, R21_12, R21_13, R21_14, R21_15, R21_16, R21_17, R21_18, R21_19, R21_20, R21_21, R21_22, R21_23, R21_24, R21_25, R21_26, R21_27, R21_28, R21_29, R21_30, R21_31, R21_32, R21_33, R21_34, R21_35, R21_36, R21_37, R21_38, R21_39, R21_40, R21_41, R21_42, R21_43, R21_44, R28_1, R28_2, R28_3, R28_4, R28_5, R28_6, R28_7, R28_8, R28_9, R28_10, R28_11, R28_12	56	680	0603WAF6800T5E	100mW Thick Film Resistors 75V ±100ppm/°C ±1% 0603 Chip Resistor	RES_CHIP_0603	C23228
R24_1, R24_2, R24_3, R24_4, R24_5, R24_6, R24_7, R24_8, R24_9, R24_10, R24_11, R24_12, R31, R37	14	33k	0603WAF3302T5E	100mW Thick Film Resistors 75V ±100ppm/°C ±1% 0603 Chip Resistor	RES_CHIP_0603	C4216
R25_1, R25_2, R25_3, R25_4, R25_5, R25_6, R25_7, R25_8, R25_9, R25_10, R25_11, R25_12	12	68k	0603WAF6802T5E	100mW Thick Film Resistors 75V ±100ppm/°C ±1% 0603 Chip Resistor	RES_CHIP_0603	C23231
R30, R38	2	20k	0603WAF2002T5E	100mW Thick Film Resistors 75V ±100ppm/°C ±1% 0603 Chip Resistor	RES_CHIP_0603	C4184
R32, R36	2	10	CRCW120610R0JNEAHP	Res Thick Film 1206 10 Ohm 5% 0.75W(3/4W) ±200ppm/C Pad SMD Automotive T/R	RES_CHIP_1206	C3008858
R33	1	10k	RK12L12C0A0E	Res POT 10K Ohm 20% 1(Elec)/1(Mech) Turns 6mm (13 X 28.5mm) Snap-In Panel Mount	VR_RK12L12C	C470285
R34, R35	2	1M	0603WAF1004T5E	100mW Thick Film Resistors 75V ±100ppm/°C ±1% 0603 Chip Resistor	RES_CHIP_0603	C22935
R39	1	62k	0603WAF6202T5E	100mW Thick Film Resistors 75V ±100ppm/°C ±1% 0603 Chip Resistor	RES_CHIP_0603	C23221
R41, R48	2	910	HPCR0603F910FKG	100mW Thick Film Resistors 75V ±100ppm/°C ±1% 0603 Chip Resistor	RES_CHIP_0603	C365225
R43, R47, R50, R54	4	15k	0603WAF1502T5E	100mW Thick Film Resistors 75V ±100ppm/°C ±1% 0603 Chip Resistor	RES_CHIP_0603	C22809
R44, R51	2	110	RT0603BRD07110RL	100mW Thick Film Resistors 75V ±100ppm/°C ±1% 0603 Chip Resistor	RES_CHIP_0603	C705717
RN1_1, RN1_2, RN1_3, RN1_4, RN2_1, RN2_2, RN2_3, RN2_4, RN3, RN4, RN5	11	10	4D03WGJ0100T5E	Array/Network Resistor, Jumper, Metal Glaze/thick Film, 10ohm, 50V, 5%+/-Tol, -200,200ppm/Cel, Surface Mount, 1206	RES_ARRAY_0603	C11993
SW1, SW2_1, SW2_2, SW2_3, SW2_4, SW3, SW4_1, SW4_2	8		CS202013MT8QN1	Switch Slide ON ON DPDT Top Slide 0.3A 30VDC 10000Cycles PC Pins Thru-Hole Bulk	SW_SLIDE_CS202013MT8	C2799227
U1	1		SP490EEN	TRANSCEIVER RS485, SMD, NSOIC8, 5V, Device Type: Line Driver / Receiver, IC Interface Type: RS422, RS485, No. of...	SOIC8	C19128
U2	1		ADUM1201BRZ-RL7	General Purpose Digital Isolator 2500Vrms 2 Channel 10Mbps 25kV/µs CMTI 8-SOIC (0.154	SOIC8	C37626
U3, U16	2		SPX3819M5-L-5-0/TR	500mA 70dB Fixed 3.3V Positive electrode 16V LDO	SOT23-5	C13417
U4, U7, U8_1, U8_2, U8_3, U8_4, U8_5, U8_6, U8_7, U8_8, U8_9, U8_10, U8_11, U8_12	14		ADG819BRTZ-REEL7	Analog Switch/Analog Multiplexer Single 2: 1 Automotive 6-Pin SOT-23 T/R	SOT23-6	C579118
U5, U6, U9_1, U9_2, U9_3, U9_4, U9_5, U9_6, U9_7, U9_8, U9_9, U9_10, U9_11, U9_12, U17	15		AD8606ARMZ-REEL	Operational Amplifier, 2 Func, 750uV Offset-Max, CMOS, PDSO8	VSSOP8_3X3_0.65E	C459905
U10_1, U10_2, U10_3, U10_4, U11	5		TXB0108PWR	8-Bit Bidirectional Voltage-Level Shifter with Auto Direction Sensing and +/-15-kV ESD Protect 20-TSSOP -40 to 85	TSSOP20_6.5X4.4_0.65E	C53406
U12	1		TXB0104PWR	4-Bit Bidirectional Voltage-Level Shifter with Auto Direction Sensing and +/-15-kV ESD Protect 14-TSSOP -40 to 85	TSSOP14_5X4.4_0.65E	C60708
U13	1		AD8397ARDZ	Op Amp Dual High Output Current Amplifier R-R O/P ±12.6V/25.2V 8-Pin SOIC N EP Tube	SOIC8_AD8397	C90876
U14	1		TPS60403DBVR	60mA Charge Pump Voltage Inverter with Fixed 250kHz Operation 5-SOT-23 -40 to 85	SOT23-5	C11338
U15	1		RT8259GJ6	Step-down type Adjustable 800mV~15V 1.2A 4.5V~24V Switching Regulator/Controller	SOT23-6	C425775