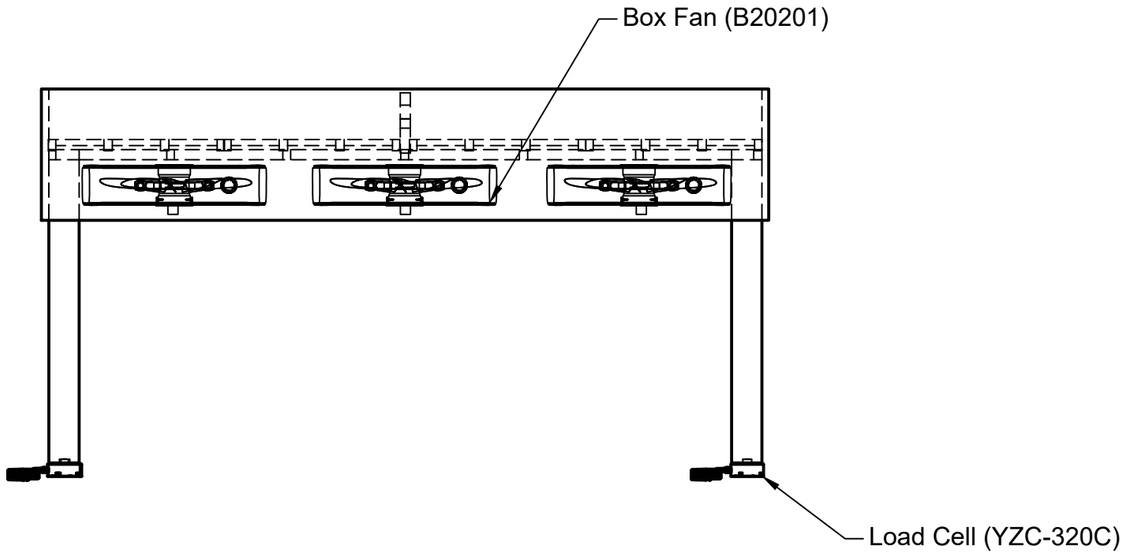

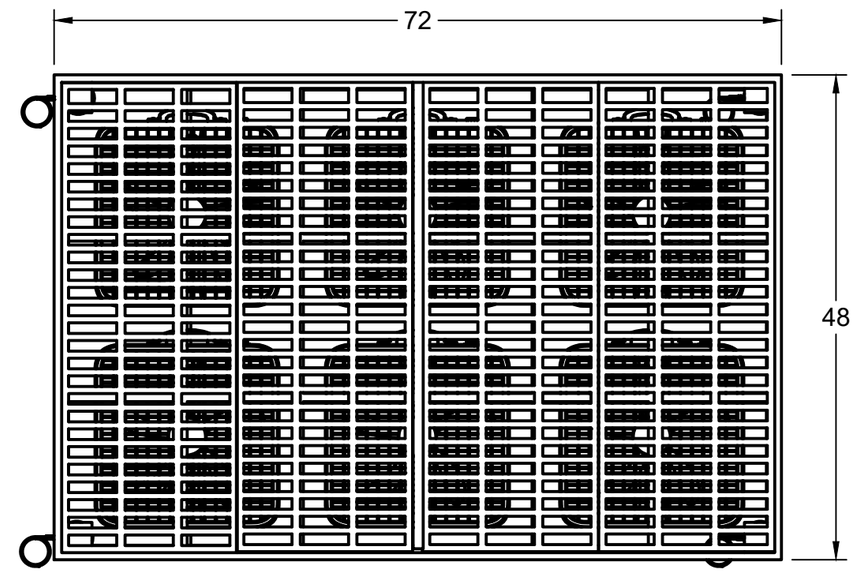

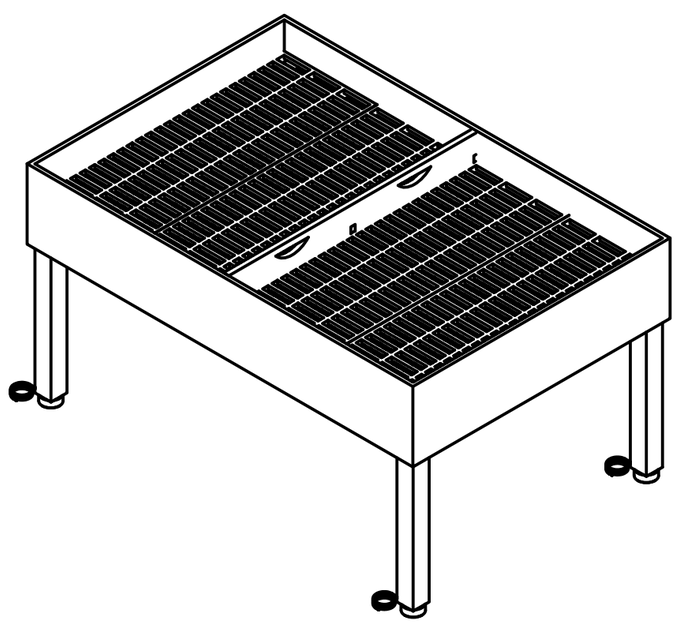

	PROJECT Senior Design Project			
	TITLE Sake Table Drawing			
APPROVED	SIZE	CODE	DWG NO	REV
CHECKED	B			
DRAWN Natalie Cupples 11/14/25	SCALE 1:15	WEIGHT	SHEET 1/1	