BoonSunClon

Expedition

Project Phase #1

By

Mr.	**Radhabhumi**	**Pangkanont**	**6788077**
Mr.	**Jirathiwat**	**Suntipreedatham**	**6788122**
Mr.	**Sakkaraj**	**Tuvajit**	**6788140**
Miss	**Pannakarn**	**Singthong**	**6788212**
Mr.	**Pipat**	**Suphattaweepong**	**6788221**

A Report Submitted in Partial Fulfillment of
the Requirements for

ITCS224 Fundamental of Information System & Software Development

Faculty of Information and Communication Technology
Mahidol University
2025

Table of Contents

Contents

I. Current Status of The Company 4

A. Operational Overview 4

B. Information Management Challenges 4

II. Product and Service Explanation 5

A. OEM furniture 5

B. ODM furniture 5

C. Bespoke furniture 5

III. Product and Service Feature Explanation 5

A. OEM furniture 5

B. ODM furniture 5

C. Bespoke furniture 6

IV. Necessary Information 6

A. Organizational Structure 6

B. Strategic Business Goal 7

C. Extra Product and Services 7

D. Extra Product and Services Features 7

E. Legal Concerns 7

F. Certificates 8

V. Porter's Five Force Model 9

A. Competitive Rivalry 9

B. Threat of New Entrants 9

C. Bargaining Power of Suppliers 10

D. Bargaining Power of Buyer 10

E. Threat of Substitutes 10

F. Porter's Five Force Model Conclusion 11

VI. Force Discussion and Response 11

A. Competitive Rivalry 11

B. Threat of New Entrants 12

C. Bargaining Power of Suppliers 12

D. Bargaining Power of Buyers 13

E. Threat of Substitute Products 13

VII. Value Chain 14

A. Primary Activity 15

B. Secondary Activity 16

VIII. BPMN Explanation 17

A. Main BPMN 17

B. Sub-Processes 18

IX. AI Acknowledgement 19

References 20

I. Current Status of The Company

A. Operational Overview

Currently, Expedition is established as a mid-sized furniture manufacture operating in Thailand. The company has successfully segmented its production floor to accommodate the dual nature of its business with a high-volume assembly line for Batch and OEM products, and a specialized workshop for OEM and Bespoke craftmanship. The business is experiencing a growth phase, particularly with new B2B contracts from hospitals and corporate offices, which has increased the demand for strict adherence to Acceptable Quality Levels (AQL).

B. Information Management Challenges

The company currently manages operations using manual paperwork and disconnected spreadsheets. This has resulted in four critical bottlenecks

1. Inventory Synchronization Issues

Raw materials are shared between units. Without a real-time system, high-grade timber reserved for a Bespoke client is occasionally consumed by the Batch production line, causing delays.

2. IP and Asset Tracking

"Mold and Tooling" assets belonging to OEM partners and bespoke clients are physically stored in the warehouse and tracked via manual logs. As the number of partners grows, ensuring a partner's mold is only used for their own production has become difficult to verify.

3. Quality Control Data Silos

QC results are recorded on paper. If a B2B partner claims a defect, Expedition struggles to retrieve historical data to verify if the product met the Acceptable Quality Level (AQL) at the time of shipment.

4. Order Complexity Management

Managing high-volume B2B batches alongside intricate B2C bespoke orders creates scheduling conflicts. Manual spreadsheets cannot adequately separate bulk workflows from detailed custom specifications, causing high-priority bespoke items to be delayed by large production runs or manufactured with incorrect features due to missed instructions workshop floor, resulting in rework and delivery delays.

II. Product and Service Explanation

A. OEM furniture

Provide OEM furniture manufacturing services, tailored to partner's requirements.

B. ODM furniture

Pre-template furniture manufacturing for a low-cost business partner.

C. Bespoke furniture

Fully customizable furniture design to fit the customer's desire to have one.

III. Product and Service Feature Explanation

A. OEM furniture

1. Partner's Design Ownership and Intellectual Property (IP)

All design patents and IP belong to the Partner and are protected under the Non-Disclosure Agreements (NDAs).

2. Production for Specification

Furniture is manufactured in accordance with the Partner's original design, material list, and finishing specifications.

3. Mold and Tooling Modification

Partners may create their new furniture mold and tooling, specified and bonded to their IP ownership. Additionally, these molds may be reused for a long-term OEM contract.

4. Quality Control (QC) Standards

Partner's defined Acceptable Quality Level (AQL), the criteria that manufacturer must meet all of conditions to be able to deliver the finished products to Partner.

B. ODM furniture

1. Design Framework

Company provides standardized IP of design for white label chassis with selectable customization option to choose from

2. High-Volume Production

With high-volume production, companies can use advantages of scale economy to scale down the furniture price, to be a perfect match for small business.

3. Finish Options

Clients may pick the furniture to finish, variable finishing and stitching of choices.

4. Direct Logistics

Company ships directly to the location designated by Client.

C. Bespoke furniture

1. Design Ownership

Clients will retain their custom design, including customized molding and tooling.

2. Fully Customizable

Furniture made for one and only, fully customizable dimensions, finishes, stitching, cushioning.

3. Material Specification

Client's specified material for the furniture.

4. Woodworks Techniques

Clients can define their woodworks techniques to match their desired design, for example: traditional and specialized assembling method.

IV. Necessary Information

A. Organizational Structure

To support the proposed Information System.

1. Sales Department

Responsible for creating quotes, managing B2B contracts, and inputting initial customer requirements.

2. Production Department

Responsible for viewing job orders, requesting materials from the warehouse, and managing the manufacturing schedule.

3. Warehouse & Logistics

Responsible for tracking raw material levels, managing Partner Molds/Tooling storage, and handling shipping.

4. Quality Assurance (QA)

Responsible for inspecting finished goods against AQL standards and inputting pass/fail data.

B. Strategic Business Goal

1. Financial

- Increase company sale turnover by 30%.

2. Human Resources (HR)

- Create and initiate marketing skills training program by the start of 2027.

3. Operational Goals

- Maintaining customer brand loyalty for at least 2 years.

C. Extra Product and Services

1. Batch furniture

- Fixed model, but customizable in a specific scope.

D. Extra Product and Services Features

1. Batch furniture

a. Ready-to-Buy

Stock-based furniture is sold to regular customers.

b. Customizable

Customers may choose from a limited selection of finishes and stitching options.

E. Legal Concerns

1. Thailand Forest Act by Royal Forest Dept.

- **Document Name:** Forest Act B.E. 2484 (Revised 2562)

2. EU Deforestation Regulation (EUDR) by European Union

- Regulation (EU) 2023/1115

3. Factory Act B.E. 2535 Amended B.E. 2562 by Dept. of Industrial Works (DIW)

- **Document Name**: Factory Act B.E. 2535 (Revised 2562)

4. Customs Act and VAT Decree (2026 Update) by Thai Customs Dept.

Document Name: Thai Customs Announcement 219/2568

5. TISI Mandatory Standards by Thai Industrial Standards Institute (TISI)

a. Document Number 11-2553

- For wiring standards

b. Document Number 116-2549

- For power outlet and plug standards.

6. Import Licensing by Ministry of Commerce (MOC)

MOC Notification B.E. 2566

F. Certificates

1. Forest Stewardship Council (FSC) by INGO

a. Document Name: FSC-STD-40-4004 V3-1

- Chain of Custody (CoC)

2. BIFMA

a. Document Name: ANSI / BIFMA X5.1-2017

- Performance Test for general office chairs

3. EPA TSCA Title VI by US EPA (Federal Law)

a. 40 CFR Part 770

- Chemical Safety

4. GREENGUARD Gold by UL Solutions

a. UL 2818 Standard Air Quality

- For Healthcare and Education

5. ISO

a. ISO9001:2015

- Quality Management

6. CAL 117 (USA) / BS 5852 (UK)

Fire safety, checks foam and fabric are cigarette and match resistant

V. Porter's Five Force Model

A. Competitive Rivalry

1. Local Cluster Competition

In Thailand there are several direct competitors in this business field. For example, Baan Tawai in Chiang Mai provide luxury Bespoke and high-end ODM furniture or industrial hubs in Samut Prakarn who supply 5-star hotel and luxury condos furniture.

2. Import Rivalry

Luxury market in Thailand, the biggest rival is often the perception that European brands are superior. For example, B&B Italia, BANG & OLUFSEN (B&O), PRECIOSA, and more.

3. Price Wars in OEM Manufacturing

Thai's furniture manufacturers are competing for the same export and local contracts. As a result, this makes rivalry in the OEM segment high because manufacturers are chasing the same goal.

4. Conclusion

- **OEM:** High
- **ODM:** Medium
- **Bespoke:** Low

B. Threat of New Entrants

1. Skilled Labor Shortage

Younger generations in Thailand are losing interest from traditional carpentry. The consequence is it is harder to find labor that is skilled in tradition for new companies.

2. Board of Investment Incentives

Thailand's Board of Investment (BOI) offer tax breaks to manufacturers. As a result, if a new player in market can use this advantage to gain advantage in cost structure.

3. Generic Barrier

New manufacturers can easily enter a low-cost furniture shop or manufacture by barrier to luxury level is high due to the cost of manufacturing and high showroom rental in center of the city like Thonglor or Ekamai.

C. Bargaining Power of Suppliers

1. Wood Regulation

Due to Thai Forest Act, there is a strict legal to protect woods like Teak and other hardwoods. Suppliers who have the legal certificate of lumber will gain high power because manufacturers cannot legally source from other sources.

2. Imported Fabrics/Hardware/Woods

Having imported material option from Italy or German for making luxury furniture is inevitable to have an internation supplier. Value fluctuations in Thai Baht (THB) gives them the more power over margin

3. Craft Sub-Contractors

Outsourcing specialized carving or lacquering local villages, specific artisans will have more power due to the rarity of their skills.

D. Bargaining Power of Buyer

1. Hi-So Network

Luxury furniture buyer pool in Thailand is relatively small and interconnected. Only one bad review can badly affect the Bespoke production.

2. Real Estate Developer Power

Real estate developers like Sansiri PCL and Supalai PCL buy massive bulk orders for Show Houses. Therefore, they are having an extreme leverage to bargain the prices in OEM and ODM segments.

3. AQL Pressure

Business customers can request proof of AQL. If the company cannot provide proof that the product met the AQL at shipment, the buyer would hold a major power to demand refunds or penalties.

E. Threat of Substitutes

1. Second-hand Luxury

While first-hand luxury furniture has a high price, buyers can aim for a second-hand luxury section which offers lower prices and merely the same experience.

2. Built-in Furniture

Luxury condos in Bangkok are fully fitted by developers, so the substitution is pre-installed.

F. Porter's Five Force Model Conclusion

1. OEM Segment

Due to numerous challenges such as strong bargaining power of real estate developer power, intense price war, and local cluster competition within the OEM segment is **classified as High** in this analysis.

2. ODM Segment

The intensity of ODM segment force is **Medium**. Contrasting OEM, where the competition is intense and driven by price, the ODM rivalries are based on the design of innovation.

3. Bespoke Segment

In Thailand, the High-end Bespoke furniture is oligopoly field of competition. Meaning that the intensity is not at the same level as OEM and ODM segments, so that the Bespoke segment force is classified as **Low**.

VI. Force Discussion and Response

A. Competitive Rivalry

1. Discussion

This force surveys the inside of furniture manufacturing business. Currently, Expedition's bottlenecks often cause large production runs to delay bespoke orders. This lack of agility allows competitors with automated systems to offer faster lead times and more reliable delivery dates.

2. Response

a. Production Leveling

Implement a digital production board that separates high-volume Bath tasks from Bespoke tasks.

b. Real-Time Dashboarding

Move away from spreadsheets to a live dashboard. This allows management to see where a bottleneck occurs before a delivery is delayed.

B. Threat of New Entrants

1. Discussion

Expedition's strongest advantage lies in its established B2B relationship and recognized certifications, such as FSC and ISO 9001. These credentials take time to build. And it would be difficult for a new entrant to secure quickly. However, if Expedition continues to rely on manual processes, a competitor with a fully digital supply chain could present itself as professional and dependable, particularly to international buyers.

2. Response

a. Automate Compliance

Integrating the FSC tracking into the IS. Turning compliance into an automated report creates a digital moat that new entrants cannot easily replicates.

b. IP Protection

Digitally lock Mold and Tooling assets to specific client IDs in the system to guarantee IP safety for OEM partners.

C. Bargaining Power of Suppliers

1. Discussion

Expedition's inventory coordination issues increase supplier power. When batch production lines occasionally use timber that was set aside for bespoke projects, the company is pushed into last-minute emergency orders, which weakens its ability to negotiate on price.

2. Response

a. Demand Forecasting

Use historical data from the IS to predict material needs 6 months in advance, allowing you to negotiate volume discounts and reduce supplier leverage.

b. Supplier Diversification

Finding more potential suppliers for the case of rare and certified materials, including both local and global suppliers. This approach will give more negotiation power to the business. If one supplier increases the price, the business will still have another alternative source.

D. Bargaining Power of Buyers

1. Discussion

The current Quality Control Data Silo is a major weakness. When a buy claims a defect, Expedition's struggle to find paper records gives the buyer total leverage in the negotiation.

2. Response

a. Digital Quality Evidence

By digitizing QA data, Expedition can issue a documented quality trial for each batch, strengthening its position against damage claims or refund demands.

b. Client Portals

Allow B2B partners with secure portal access to a secure portal where they can track the real-time status of their orders and download digital quality control approval certificates.

E. Threat of Substitute Products

1. Discussion

Many condominiums now include built-in furniture which reduces customers' need to buy additional pieces. At the same time, the second-hand market offers luxurious-looking furniture at much lower prices. Both factors increase competition and make it harder for Expedition to attract buyers.

2. Response

a. Service & Warranty Tracking

Emphasis on creating value through services that second-hand products cannot provide by using the IS system to record production history and digital warranty. Customers who buy Expedition furniture will have confidence in after-sales care and maintenance that can be traced throughout its lifespan.

b. Strategic Developer Partnership

Use the IS to digitally keep individual B2B partner's requests such as hospital-grade finishes and corporate brand colors. By making it easy for customers to re-order exact replicas of their current set up, Expedition builds high switching costs that makes it difficult for customers to one day switch out the system for generic modular furniture.

VII. Value Chain

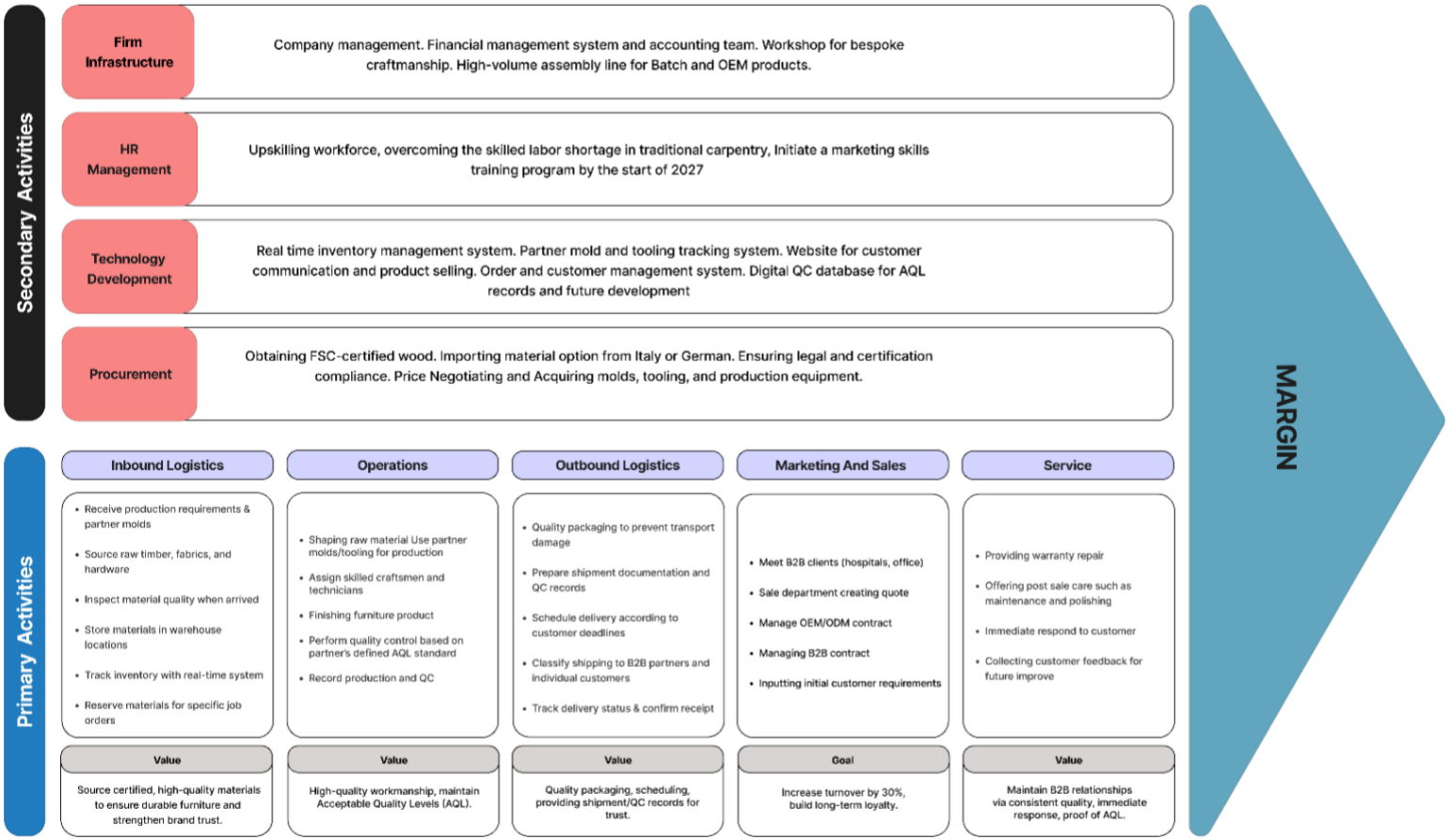

Fig VII. The Diagram of the Value Chain of Expedition

A. Primary Activity

1. Inbound Logistics

Inbound logistics for Expedition is associated with receiving raw timber and materials, keeping partner molds from OEM partners and bespoke clients design specifications. However, due to current manual tracking causes synchronization issues and mold misuse.

2. Operations

Expedition operations aim to transforming input into the final product by involve cutting wood, assembling furniture, finishing, and assigning work to bespoke craftsmanship. We hope to build value through high-quality workmanship and always maintain Acceptable Quality Levels (AQL)

3. Outbound Logistics

Expedition outbound logistics include packaging finished furniture, preparing shipment documentation, and delivering products to B2B partners as well as individual clients. We dedicate value through quality packaging to protect high-quality furniture during transportation and through accurate delivery scheduling to respect customer given deadlines. Subsequently, providing shipment records and quality control documentation helps maintain customer trust and increase customer loyalty to support business relationships in the long term.

4. Marketing and Sales

Marketing and sales activities are driven by the Sales Department, which is responsible for creating quotes, managing B2B contracts, and inputting initial customer requirements. Value is generated by targeting strategic business goals, specifically aiming to increase company sale turnover by 30% and building long-term brand loyalty.

5. Services

Expedition service aiding the customer outside the purchase including warranty support, repair services, and quality verification. These services help to maintain B2B partners such as hospitals and corporate offices in the long-term depending on consistent product quality and immediate response support. Value is created by keeping strong customer relationships, resolving issues, and providing proof that delivered products meet the Acceptable Quality Level (AQL) standards.

B. Secondary Activity

1. Firm Infrastructure

Firm infrastructure supports the dual nature of the business by successfully segmenting the production floor into a high-volume assembly line for Batch and OEM products, and a specialized workshop for bespoke craftsmanship. However, current management infrastructure is bottlenecked by manual paperwork and disconnected spreadsheets, creating a critical need for an integrated information system to support cross-departmental operations.

2. HR Management

Human resource management focuses on upskilling the workforce and overcoming skilled labor shortages in traditional carpentry. A key strategic initiative for HR is to create and initiate a marketing skills training program by the start of 2027 to support the company's financial growth goals.

3. Technology Development

Technology development is currently centered on replacing manual systems to resolve four critical information management bottlenecks: inventory synchronization, IP and asset tracking, quality control data silos, and order complexity management. Implementing a real-time system is vital to prevent high-grade timber from being misallocated and to properly separate bulk B2B workflows from intricate B2C bespoke orders.

4. Procurement

Procurement involves sourcing necessary raw materials and imported fabrics while navigating strict legal regulations and supplier bargaining power. This activity requires strict adherence to legal frameworks, such as the Thailand Forest Act and EU Deforestation Regulation, and maintaining necessary certifications like the Forest Stewardship Council (FSC) Chain of Custody to ensure materials are legally and sustainably sourced.

VIII. BPMN Explanation

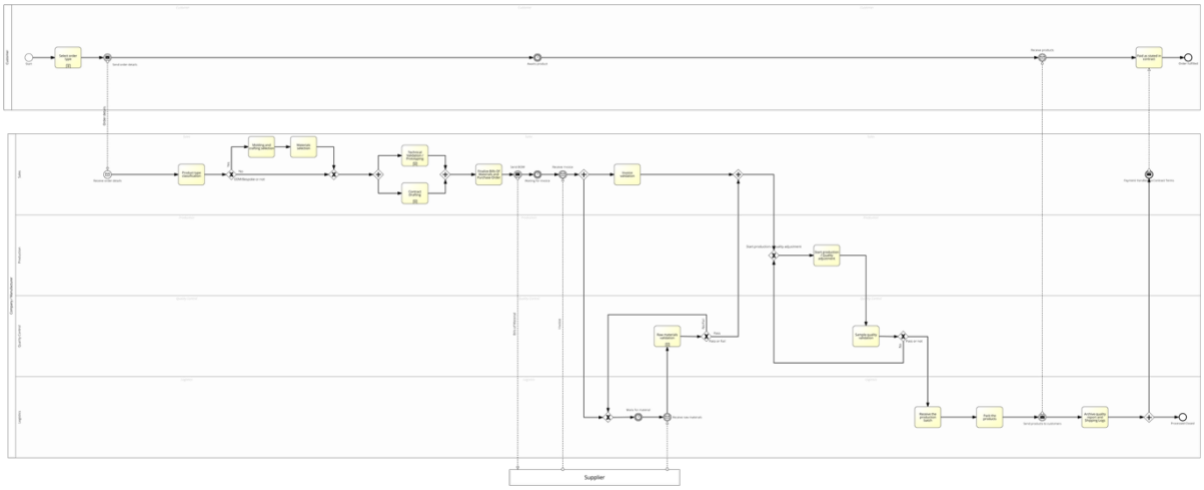

Figure VIII. BPMN of Expedition group

A. Main BPMN

This BPMN displays the workflow of customer input handling and product manufacturing. In the customer input handling process, starting by analyzing the order types to classify business models for the furniture, then the order details will be sent to the manufacturers. On product manufacturing process, after receiving the order details from the customers the salesman will classify the product type then check whether it's either OEM, Bespoke or not if so the molding, craft, then the order details will be sent to the manufacturers. On product manufacturing process, after receiving the order details from the customers the salesman will classify the product type then check whether it's either OEM, Bespoke or not if so the molding, crafting, and materials selection are needed, next the sales will create prototype and draft the contract before sending finalized bill to supplier, who sent back the invoice for sales to validate and raw materials to production worker, which passed through the transportation(logistics) and raw materials validation by Quality Control. Then, the product will be manufactured and adjusted in quality until it passes the quality control standard. The product batch will pass through the packaging process and be transferred to the customer.

B. Sub-Processes

1. Furniture type and force models

This process indicates whether the order was from the individual customer details of the order need to be gathered before submitting it to the manufacturing facility, while in business case the product price and quality will be depended on the given budget where the high budget will get the product based on the OEM force model of our company, whilst the lower budget will receive product that focus on the ODM force model.

2. Prototyping and Validation

This process shows validation process of prototypes, starting with production worker create a prototype, which can modify if the customer wasn't satisfied with current prototype, consequently the prototype will be sent to the Quality Control who received prototype and test it to record test results and find flaws in prototype, if the prototype pass the standard and get certificate, it will be delivered to sales person along with test result and sales will give the prototype and result to customer and wait for the customer feedbacks if the response was unsatisfied then the Quality Control will find point to adjust and sent back to production to modified.

3. Contract Drafting

This process illustrates the drafting contract process between the company and the customer. Beginning with company writing a draft version of the contract then sending the details to the customers to let them decide whether the contract conditions satisfy their needs, if the contract is unsatisfactory, they will send the details back to the company for further contract configuration.

4. Material Quality Validation

This process represents the process of validating raw materials. Quality Control will check the quality of materials used in furniture. If the quality is unacceptable, the people in sales will need to create material notices and send replacements requests to suppliers, while the transport crews send materials back to the suppliers.

IX. AI Acknowledgement

AI Usage Acknowledgment Statement

We acknowledge that we have utilized Generative Artificial Intelligence (Generative AI) tools (Google Gemini, ChatGPT) in preparing this work. The AI tools were used for the following purposes:

/ Brainstorming ideas

/ Summarization

☐ Language correction, grammar checking, or translation

/ Extraction

☐ Other (please specify): _____

References

[1] Alderson, J. (2021, August 17). Supplier Diversification in 5 Easy Steps. IRely. https://irely.com/supplier-diversification-in-5-easy-steps/

[2] Maverick, J. B. (2023, December 10). Analyzing Porter's Five Forces on Apple (AAPL). Investopedia. https://www.investopedia.com/articles/investing/111015/analyzing-porters five-forces-apple.asp