Confidential

EPSON

Receipt Printer

TM-T88IV

Specification

STANDARD	
Rev. No.	G
Notes	

Copied Date	, ,
Copied by	

SEIKO EPSON CORPORATION

MATSUMOTO MINAMI PLANT
2070 KOTOBUKI KOAKA, MATSUMOTO-SHI, NAGANO, 399-8702 JAPAN
PHONE+81-263-86-5353 FAX+81-263-86-9925

Confidential

REVISION SHEET

The table below indicates which pages in this specification have been revised.
Before reading this specification, be sure you have the correct version of each page.

Revisions		Design Section			Sheet Rev. No.					
Rev.	Document	WRT	CHK	APL	Sheet	Rev.	Sheet	Rev.	Sheet	Rev.
A	Enactment	Uehara	–	Kato	I	F	17	F	42	F
B	Change	Uehara	–	Kato	II	F	18	F	43	F
C	Change	Hirabayashi	–	Kato	III	F	19	F	44	F
D	Change	Takeuchi	Takagi	Shinohara	IV	F	20	F	45	F
E	Change	Koyabu	–	Murata	V	F	21	F	46	F
F	Change	Koyabu	–	Murata	VI	F	22	F	47	F
G	Change	Azegami	Koakutsu	Shinohara			23	F	48	F
							24	F	49	F
							25	F	50	F
					1	F	26	F	51	F
					2	F	27	F	52	F
					3	F	28	F	53	F
					4	F	29	F	54	F
					5	F	30	F	55	F
					6	F	31	F	56	F
					7	F	32	F	57	F
					8	F	33	F	58	F
					9	F	34	F	59	F
					10	F	35	F	60	F
					11	F	36	F	61	F
					12	F	37	F	62	F
					13	F	38	F	63	F
					14	F	39	F	64	F
					15	F	40	F	65	F
					16	F	41	F	66	F

TITLE	Front Part							
TM-T88IV Specification (STANDARD)	Cover	Rev. Sheet	Confidentiality Agreement	General Features	Table of Contents	Contents	Appendix	Total
	1	12	1	1	5	127	17	164

Confidential

REVISION SHEET

The table below indicates which pages in this specification have been revised.
Before reading this specification, be sure you have the correct version of each page.

Revisions		Design Section			Sheet Rev. No.					
Rev.	Document	WRT	CHK	APL	Sheet	Rev.	Sheet	Rev.	Sheet	Rev.
A	Enactment				67	F	92	F	117	F
B	Change				68	F	93	F	118	F
C	Change				69	F	94	F	119	F
D	Change				70	F	95	F	120	F
E	Change				71	F	96	F	121	F
F	Change				72	F	97	F	122	F
G	Change				73	F	98	F	123	F
					74	F	99	F	124	F
					75	F	100	F	125	F
					76	F	101	F	126	F
					77	F	102	F	127	G
					78	F	103	F		
					79	F	104	F		
					80	F	105	F		
					81	F	106	F		
					82	F	107	F		
					83	F	108	F		
					84	F	109	F		
					85	F	110	F		
					86	F	111	F		
					87	F	112	F		
					88	F	113	F		
					89	F	114	F		
					90	F	115	F		
					91	F	116	F		

TITLE	Front Part							
TM-T88IV Specification (STANDARD)	Cover	Rev. Sheet	Confidentiality Agreement	General Features	Table of Contents	Contents	Appendix	Total
	1	12	1	1	5	127	17	164

Confidential

REVISION SHEET

The table below indicates which pages in this specification have been revised.
Before reading this specification, be sure you have the correct version of each page.

Revisions		Design Section			Sheet Rev. No.					
Rev.	Document	WRT	CHK	APL	Sheet	Rev.	Sheet	Rev.	Sheet	Rev.
A	Enactment				App.1	F				
B	Change				App.2	F				
C	Change				App.3	F				
D	Change				App.4	F				
E	Change				App.5	F				
F	Change				App.6	F				
G	Change				App.7	F				
					App.8	F				
					App.9	F				
					App.10	F				
					App.11	F				
					App.12	F				
					App.13	F				
					App.14	F				
					App.15	F				
					App.16	G				
					App.17	F				

TITLE	Front Part							
TM-T88IV Specification (STANDARD)	Cover	Rev. Sheet	Confidentiality Agreement	General Features	Table of Contents	Contents	Appendix	Total
	1	12	1	1	5	127	17	164

Confidential

REVISION SHEET

REV.	SHEET	CHANGED CONTENTS
A	All	Newly enacted.
B	2	1.1 Printing Specifications Added NOTES: • … However, the print speed … and 33°C {91.4°F}.
	3	1.2 Character Specifications International characters: Changed 37 to 48.
C	All	Changed the sheet numbers.
	I	CONFIDENTIALITY AGREEMENT Added 8. to Cautions.
	7	1.6 Printable Area 1) Roll paper For 80mm paper width model Changed "… are approximately 3.7 ±2 mm {0.15 ± 0.079"}." to "… are approximately 3.7 mm {0.15"}."
		Figure 1.6.1 Roll Paper Printable Area Changed "d = 3.7 ± 0.2 mm {0.15 ± 0.079"}" to "approximately 3.7 mm {0.15"}" Changed "e = 3.7 ± 0.2 mm {0.15 ± 0.079"}" to "approximately 3.7 mm {0.15"}"
		Figure 1.6.2 Roll Paper Printable Area Changed "d = 3.7 ± 0.2 mm (0.15 ± 0.079")." to "approximately 3.7 mm {0.15"}" Changed "e = 3.0 ± 0.2 mm (0.12 ± 0.079")." to "approximately 3.0 mm {0.12"}"
	46	3.3.3.1 Serial Interface specification 1) DIP switch 1 NOTES: *1: Changed "The transmission speed can be selected by setting the transmission condition of the serial interface." to "The transmission speed depends on the setting of the transmission condition of the serial interface." Added • 2400, 4800, 9600, 19200, 38400, 57600, and 115200 are available as setting values. The factory setting is 38400.
	48	Table 3.3.6 DIP Switch 2 Factory setting for switch 8: Changed "OFF" to "ON."
	49 - 50	Added 3.3.3. USB USB interface specification.
D	8	1.6 Printable Area Added "With printing with two-part energizing," to NOTE above Figure 1.6.3. Added "With printing with four-part energizing," to NOTE above Figure 1.6.4.
	59	5.1 Standard Accessories Added "• Connector cover (May not be included with the printer.)"
	73	ESC = [Range]: Corrected "1 ≤ *n* ≤ 3" to "0 ≤ *n* ≤ 255."
	113	GS I [Description] [Type ID] Corrected "Bit1 Reserved" to "Autocutter Installed." Corrected "Bit2,3,6 Reserved" to "Not used.
E	47, 48, 49	3.3.3 DIP switches Table 3.3.3, 3.3.6, 3.3.9 DIP Switch 2 Selects print density/Low power consumption mode: Added NOTE: (*1).

TITLE

TM-T88IV
Specification
(STANDARD)

Confidential

REVISION SHEET

REV.	SHEET	CHANGED CONTENTS
F	All	All pages are revised.
	2	1.1 Printing Specifications 9) Printing speed, 10) Paper feed speed Corrected “200 mm/s {7.9"/s}” to “200 mm/s {7.87"/s}, “Approximately 47.2 lps (4.23 mm {1/6"} feed)” to “Approximately 47.2 lps (4.23 mm {1/6"} feed/line)“, “100 mm/s {3.9"/s}” to “100 mm/s {3.94"/s}”, “150 mm/s {5.9"/s}” to “150 mm/s {5.91"/s}”,and “60 mm/s {2.4"/s}” to “60 mm/s {2.36"/s}”.
	4	1.3 Autocutter 2) Roll paper end sensor: Changed “ NOTES 2. Changed “Paper must be fed over 40 mm {1.57"} before cutting if the printer is stopped.” to “When operating the autocutter after leaving the printer unused for some time, feed paper 40 mm {1.57"} or longer to prevent paper jams in the autocutter unit.” 1.4 Roll Paper Supply Device 2) Roll paper end sensor: Changed “When the sensor detects a paper-end, the printer stops printing.” to “Detects a roll paper-end during printing, and stops printing if detects a paper-end.” Added “The printer resumes printing when paper is loaded and the roll paper cover is closed.” 3) Roll paper near-end sensor: Corrected “When the paper roll diameter becomes sufficiently small, the detects…” to “When the paper roll diameter becomes sufficiently small, this sensor detects…”. Changed “If the sensor is enabled by ESC c 4, the printer stops printing.” to “Enabling/disabling of this sensor to stop printing on detection of a paper near-end can be selected by the a command (ESC c 4).” Corrected “23 mm {0.9"/s}” to “23 mm {0.91"/s}”. Changed “If the roll paper with the paper spool that is out of the specified range,…” to “If the roll paper with a paper spool that is out of the specified range is used,…”
	5, 6	1.5 Paper Specification 1) Paper type: Added “The chromogenic side must face outside.” 5) Notes on using two-color thermal paper Changed “• The print head may be damaged or the print quality may be poor using signal-color thermal paper if the two-color print command is executed and if two-color paper is selected by the customized value setting with Function 5 of the GS (E command.” to “• Do not use signal-color thermal paper when two-color print control is selected in the customized value setting of Function 5 of the **GS (E** command. Doing so may result in faulty printing, deterioration of printer reliability, damage of the print head, and other serious problems. Changed “• Printing with Color 2 (red on the specified…” to “Color 2 (red or blue on the specified…” Changed “• The reliability when two-color thermal paper is used differs from the reliability when the single-color thermal paper is used.” to “When two-color print control is selected, the printer reliability differs from that when single-color print control is selected.” 6) Print density adjustment Changed “Table 1.5.3” to “Table 1.5.3 Original Paper type and density level”. Changed “Table 1.5.4” to “Table 1.5.4 Original Paper type and density level”.
TITLE		**TM-T88IV** Specification (STANDARD)

Confidential

REVISION SHEET

REV.	SHEET	CHANGED CONTENTS
F	7, 8	7) Changed “If such paper must be used, …that no faulty printing or any other problems occur before you use it for actual printing.” to “If such paper must be used, …that no faulty printing, print density, or any other problems occur before you use it for actual printing.” 1.6 Printable Area 1) Roll paper Figure 1.6.1 Roll Paper Printable Area, Figure 1.6.2 Roll Paper Printable Area Removed “[All the numeric values are typical.]” NOTE: Added “Although the print area with the 58 mm paper width model is 1 to 360 dots, the bump occurs at the same position as below.
	9	1.9 Electrical Characteristics Table 1.9.1 Current Consumption (Operating) (Two-color print mode) Peak: Corrected “Approximately 6.3A” to “Approximately 5.3A”.
	10	NOTES: 1. Notes on using the Epson Epson PS-180 power supply unit Added “Printing with this product is assumed to use receipt or the equivalent.”
	13	1.13 Installation Changed “(Following the procedures… install the wall mount…)” to “(Following the procedures… install the wall hanging bracket…) “ Added “(See APPENDIX D.)”
	14	2.1.1.1 Specifications NOTE 1.: Changed “The data word length, baud rate, and parity depend on…” to “The hand shaking, data word length, baud rate, and party depend on…” 2.1.1.2 Switching between online and offline 5) Changed “(in cases when an empty paper supply is detected by either paper roll end detector or the paper roll near-end detector with a printing halt feature by **ESC c 4**).” to “(in cases where a paper-out is detected by the roll paper-end sensor or where a paper-out occurs when a printing halt feature is enabled by **ESC c 4**).” 6) Changed “During macro executing standby status.” to “When waiting for the FEED button to be pressed before macro execution.”
	15	2.1.1.3 Interface connector terminal assignments and signal functions Table 2.1.1 TM-T88IV Printer Status and Signals Pin number 20: 1) Added “The printer goes BUSY (MARK) in the following conditions:” Changed 5. Added “(Only when the roll paper is not present.)” Changed “6. During macro executing standby states.” to “6. When waiting for the FEED button to be pressed before macro execution.”
	17	2.1.1.6 Notes on setting DIP switch 2-1 to ON 1) Changed “… printing stops due to a paper-end, …” to “…the printer stops printing when stop of printing on a paper-end is set, …”. 3) Example: Changed “Transmit one line of data so that the receive buffer does not become full.” to “Data amount of one line must not make the receive buffer full.”

TITLE

TM-T88IV
Specification
(STANDARD)

Confidential

REVISION SHEET

REV.	SHEET	CHANGED CONTENTS
F	19	2.1.2.1 Compatibility Mode 3) Switching between online and offline (5) Changed “(in cases when empty … paper shortage enabled by **ESC c 4**) “ to “(When the paper sensor … set by **ESC c 4** operates.).” (6) Changed “During macro executing standby status.” to “When waiting for the FEED button to be pressed before macro execution.” Removed “(7) When a temporary abnormality occurs in the power supply voltage.”
	21	2.1.2.3 Interface Pin Assignments for Each Mode NOTE 1: Changed “To the host computer provided with none of the signal lines …” to “To the host computer not provided with all signal lines…” NOTE 4: Removed “(Data transmissions to the printer shall be made after verifying the nAck signal or while the Busy signal is at the “L” level.).”
	23	2.1.2.6 Notes on resetting the printer through the interface Changed ”To enable the printer reset in compatibility mode, …” to “To enable the printer reset through the interface nlnit signal (pin #31) in compatibility mode, …” 2.1.2.7 Reception of status from the printer through the bidirectional parallel interface 3) Changed “When ASB is used, … over the other status signals” to “When ASB is used, … over the other status signals in the Reverse Mode.”
	25	2.2.2 Power Supply Connector NOTE: Changed “Be sure to ground …using the hole …” to “Be sure to ground …using the locking screw …”
	45	3.3.2 Panel Buttons NOTE: Changed “This button is disabled by ESC c 5.” to “Enabling/disabling of this button can be selected by **ESC c 5**.” Added “If the command is set to disable the button, the button is unable to function.”
	47	3.3.3.1 Serial interface specifications 2) DIP switch 2: 8 switches Table 3.3.3 DIP Switch 2 SW 2, SW 6 (ON): Changed “—“ to “Fixed to OFF”. NOTES: 2. Changed “If the DIP switch …” to “Even if the DIP switch ….”
	48	3.3.3.2 Parallel interface specification Table 3.3.6 DIP Switch 2 SW 2, SW 6, SW 7 (ON): Changed “—“ to “Fixed to OFF”. SW 8 (OFF): Changed ““—“ to “Fixed to ON”.
	49, 50	3.3.3.3 USB interface specification Table 3.3.9 DIP Switch 2 SW 2, SW 6, SW 7 (ON): Changed “—“ to “Fixed to OFF”. SW 8 (OFF): Changed “—“ to “Fixed to ON”. Table 3.3.10 DIP Switch 2-3 and 2-4 NOTES: 2. Changed “If the DIP switch …” to “Even if the DIP switch …” 3.3.4 Customized value NOTES: Added “1. The selection of the number … with two-part energization.” Added “2. “When two-color print control” is … fixed to “two-part energization”. 3. Changed “(200 mm/s)” to “(200 mm/s {7.87"/s}).”

TITLE

TM-T88IV
Specification
(STANDARD)

Confidential

REVISION SHEET

REV.	SHEET	CHANGED CONTENTS
F	51	3.4 Panel LED Indicators 2) Error (ERROR) LED Flashing: Error: Changed “(See Section 3.7.)” to “(See Section 3.8.).” NOTE: Changed “The macro can be executed continuously or can be executed by pressing the button.” to “The macro can be executed continuously or can be executed by pressing the FEED button.”
	52	3.5 Self-test 4) Changed “Ending the self-test” to “Ending the self-test and operation after the test.”
	53	3.6 Hexadecimal Dumping 2) Changed “Starting hexadecimal dumping” to “Running hexadecimal dumping.” Divided the procedures into 3 steps. Itemized the two options of Step 1. Itemized the three options of Step 3. Removed “3) Ending Hexadecimal Dumping.” NOTES 3.: Changed “Insufficient print data … by setting the printer offline.” to “Insufficient print data … by pressing down the FEED button.”
	55, 56	3.8.1 Error Types 1) Errors that automatically recover Table 3.8.1 Errors That Automatically Recover Roll paper cover open error: Removed “The printer restarts … the cover was opened” from “Recovery.” 3) Unrecoverable errors Table 3.8.3 Unrecoverable Errors Changed “R/W error in memory or gate array” to “R/W error in memory.” CPU execution error: Changed “The CPU executes an incorrect address or I/F board is not connected.” to “The CPU executes an incorrect address.” 3.8.2 Printer operation when an error has occurred Added “• Goes offline.”
	57	3.9 Cover Open Button Removed “When the cover is closed, the cover open button is latched.” 3.10 Cover Open Sensor NOTE: Changed “Whether the cover is open or not does not affect the status reported by the roll paper end sensor.” to “The status reported by the paper sensors remains the same as that reported immediately before the cover was opened.” 3.11 Print Buffer-full Printing Added “<When in standard mode>.” Removed “(in standard mode).” Added “<When in page mode> When subsequent data is received … to one line below the processed line.”
	59	5.1 Standard Accessories Removed “(Not be included in some models.)” from “• Connector cover (Not be included in some models.).” 5.2 Options Removed “• RS-485 interface board (installed at the factory).”

TITLE

TM-T88IV
Specification
(STANDARD)

Confidential

REVISION SHEET

REV.	SHEET	CHANGED CONTENTS
F	64	DLE EOT • Roll paper sensor status (*n* = 4) (In the table) (Bit 5, 6) Changed “Roll paper end sensor: paper present.” to “Roll paper end sensor (paper sensor): paper present.” Changed “Roll paper end sensor: paper not present.” to “Roll paper end sensor (paper sensor): paper not present.”
	78	ESC c 3 [Description] (In the table) (Bit 2 and 3) Changed “Roll paper end sensor disabled.” to “Roll paper end sensor (paper sensor) disabled.” Changed “Roll paper end sensor enabled.” to “Roll paper end sensor (paper sensor) enabled.”
	82	GS ! *n* [Description] Changed “• Selects character size (enlargement in vertical and horizontal directions).” to “Selects character size (height magnification and width magnification). (In the table) Changed “Enlarged in vertical direction” to “Height magnification”. Changed “Enlarged in horizontal direction” to “Width magnification”.
	87, 88	<Function 5> GS (E [Description] • Number of division of thermal head energization setting (*a* = 97) Removed “(*) Effective only when "single-color print control is selected. When automatic control is selected, usual data is printed with one-part energization and a high duty data is printed with two-part energization.” Removed “(*) When “two-color print control” is selected, the thermal head energization setting is fixed to “two-part energization”.” Added “[Reference] 3.3.4 Customized value.”
	91	<Function 50> GS (K Added **“**[Note] When the low-power consumption mode is selected, the above setting values are ignored.” <Function 97> GS (K [Notes] Added “When the low-power consumption mode is selected, the above setting values are ignored.”
	99	GS (k *pL pH cn fn [parameters]* [Description] (In the table “Type of Symbol”) *cn* = 48: Added “(two-dimensional codes).” *cn* = 49: Added “ (two-dimensional codes).”
	102	<Function 069> GS (k [Description] Changed “• When *m* = 48, … “Level Setting” and the “Ratio Setting” is canceled.” to “• When *m* = 48, … “Level Setting” and the error correction level set by the “Ratio Setting” is canceled.” Changed “• When *m* = 49, …and the “Level Setting” is canceled.” to “• When *m* = 49, …and the error correction level set by the “Level Setting” is canceled.”

TITLE

TM-T88IV
Specification
(STANDARD)

Confidential

REVISION SHEET

REV.	SHEET	CHANGED CONTENTS
F	113	GS a [Description] • Third byte (paper sensor information) (In the table) (Bit 2, 3) Changed “Roll paper end sensor: paper present.” to “Roll paper end sensor (Paper sensor): paper present.”
	118	GS r [Description] • Paper sensor status (*n* = 1, 49) (Bit 2, 3) Changed “Roll paper end sensor: paper present.” to “Roll paper end sensor (Paper sensor): paper present.”
	App.1	A.1 Notes on Printing and Paper Feeding 3) Removed “Interval of autocutting operation in the receipt section”. Changed “For driving the auto cutter of the receipt section, take the interval as a minimum of 10 lines of printing or paper feeding (to prevent small pieces of cut paper from dropping into the auto cutter).” to “It is recommended to run … to cause paper jams.” A.2: Changed “Notes on Supplying the Power to the Printer” to “Notes on Installation.” Added “If the voltage does not return to normal, an error occurs.” Changed “Therefore, printing speed may slow, …” to “As stopping of printing may occur, …” Changed “Both high and low voltage errors are shown in table 3.7.3.” to “In both high and low voltage errors, the ERROR LED indicator flashes.” Removed “The flashing patterns are shown in the table.”
	App.2	A.4 Other Notes 1) Printer mechanism handling Changed “• Do not use the cover open button except when necessary.” to “• Do not open the printer cover during printing operation or the printing mechanism may become damaged.”
	App.3	APPENDIX B: PAPER ROLL SETUP B.1 Replacing the Paper Roll 2) Changed “Remove the spool of the used roll paper from the paper holder and load the new roll paper.” to “Load a roll of paper, and pull some of the paper from the roll paper out toward the front of the printer.” 3) Changed “Pull out some of the paper from the roll paper and close the printer cover.” to “Close the roll paper cover.”
	App.4	APPENDIX C: RECOVERY FROM THE AUTO CUTTER ERROR 2) Changed “Rotate the cutter motor knob counterclockwise.” to “Rotate the cutter motor knob in the direction shown by an arrow.” 3) Changed “3) Following the instructions … until the indicator appears in the hole.” to “Following the instructions … until the triangular mark appears in the hole.”
	App.5 App.6	APPENDIX D: ADJUSTING THE PAPER ROLL NEAR-END SENSOR LOCATION Table D.1 Adjustment Positions Corrected “Approximately 23 mm {0.97"}” to “Approximately 23 mm {0.91"}.” NOTE 3. Added “(See Figure D.2 Changing the Near-end Sensor Position.).” (1) Changed “Loosen the adjustment screw that is fixing the detector.” to “Loosen the adjustment screw that is fixing the roll paper near-end sensor.” (2) Changed “Push the lever the back off the hole.” to “Push in the detection lever.”

TITLE

TM-T88IV
Specification
(STANDARD)

Confidential

REVISION SHEET

REV.	SHEET	CHANGED CONTENTS
F	App.7	APPENDIX E: PRINT HEAD CLEANING Changed “Paper dust on the thermal elements may lower the print quality.” to “Paper dust or other foreign objects attached to the heat elements of the print head may reduce print quality.” NOTE: Added “Turn on the printer power only after alcohol has completely dried.” (*) Added “Turn on the printer power only after the water has completely dried.”
	App.8	APPENDIX F: NOTES ON USING THE DRAWER KICK-OUT CONNECTOR 1) Changed “Drawer specifications (See Section 3.2.3, Drawer kick-out connector)” to “Drawer specifications (See Section 2.2.3, Drawer kick-out connector).”
	App.11	G.1 About updating the maintenance counter Changed “• If the printer is not sending/receiving data or is not operating for two seconds while the power is turned on, the printer enters the power-saving mode and all of the values of the maintenance counter including the printer operation time stop counting.” to “• If the printer is not sending/receiving data or is not operating while the power is turned on, the printer enters the power-saving mode.” G.2 Changed “Power off procedure by the host computer” to “Printer power off procedures.” Added “It is recommended to turn off the printer after executing the powering-off command **DLE DC4** (*fn* = 2).” 4) The host waits for the power off status. Changed “For the parallel interface model, after the host transmits **DLE DC4** ***fn a b***, the printer is required to be ready for receiving data from the host.” to “With the parallel interface model, the host computer is required to be ready to operate negotiation immediately after transmitting **DLE DC4** ***fn a b*** so that the host computer can receive the printer status.” 5) Changed “Turn the host computer power off.” to “Power off the host computer and the printer.”
	App.13	APPENDIX J: NOTES ON USING THE ASB STATUS Added “While the host computer is in the BUSY status, transmission of all the data including ASB is suspended.” Changed “…as one ASB status showing the presence of change, followed by the latest ASB status.” to “…as (a) “one ASB status showing the presence of change”, followed by (b) “the latest ASB status”. Changed “When a sequence of operations are performed, the roll paper cover is opened, and then the roll paper cover is closed, the following pieces of data are accumulated.” to “When a sequence of operations as follows are performed and the printer status changes, the accumulated ASB is transmitted in order if the host computer is in the READY status.” Changed “When the ASB status is received following this, a total of eight (8) bytes of ASB will be transmitted, as follows.” to “If the status changes of ① to ④ occur while the host computer is in the BUSY status, the printer transmits a total of 8 bytes of ASB shown below when the host computer returns to the READY status.” Corrected 1: (Third Status) “0000 0011” to “0000 0000.” Corrected 2, 3 and 4: (Third Status) “0000 0011” to “0000 1111.” Changed “Accumulated ASB (①+②+③+④)” to “(a) Accumulated ASB (1+2+3+4).” Changed “The latest ASB Fourth Status” to “(b) The latest ASB Fourth Status.”
TITLE		**TM-T88IV** Specification (STANDARD)

Confidential

REVISION SHEET

REV.	SHEET	CHANGED CONTENTS
F	App.13	Corrected (a) Accumulated ASB (1+2+3+4):(Third Status) “0000 0011” to “0000 0000.” Corrected (b) The latest ASB Fourth Status:(Third Status) “0000 0011” to “0000 1111.”
	App.14 App.15	APPENDIX K: COMPARISON BETWEEN TM-T88Ⅳ AND TM-T88Ⅲ 7. Hexadecimal dumping TM-T88Ⅲ: Changed “When hexadecimal dumping ends … the printer cuts paper completely.” to “When hexadecimal dumping is ended … <u>the printer does not execute a partial cut</u>. 15. Error detection in the standby status Added “• Detection of paper presence.” NOTE: Changed “The standby means the case that the data is not transmitted or received while the power is turned on.” to “The standby status means when no data is transmitted or received, or when no operation is run while the power is turned on.”
	App.16	APPENDIX L: COMPARISON TABLE BETWEEN TM-T88Ⅳ AND TM-T88Ⅲ (COMMANDS) Removed “GS v 0”, “Maximum size in horizontal direction: 256 KB”, and “Maximum size in horizontal direction: 65535 bytes”.
	App.17	APPENDIX M: LOW POWER CONSUMPTION MODE (In the table) Corrected “NV bit image (**GS v 0**)” to “NV bit image (**FS p**).” Corrected “Raster bit image (**FS p**)” “100 mm/sec fixed “ to “Raster bit image (**GS v 0**).” “200 mm/sec fixed.“ Added “NV graphics (Function 69 **GS (L**).” Added “Raster bit image (Function 50 **GS (L**).”
G	127	**GS v 0** [Range] Changed “$1 \le (x_L + x_H \times 256) \le 256$ $(0 \le x_L \le 255, x_H = 0,1)$” to “$1 \le (x_L + x_H \times 256) \le 65535$ $(0 \le x_L \le 255, 0 \le x_H \le 255)$.”
	App.16	APPENDIX L: COMPARISON TABLE BETWEEN TM-T88Ⅳ AND TM-T88Ⅲ (COMMANDS) Removed “**GS v 0**” from the table.

TITLE

TM-T88Ⅳ
Specification
(STANDARD)

Confidential

CONFIDENTIALITY AGREEMENT

BY USING THIS DOCUMENT, YOU AGREE TO ABIDE BY THE TERMS OF THIS AGREEMENT. **PLEASE RETURN THIS DOCUMENT IMMEDIATELY IF YOU DO NOT AGREE TO THESE TERMS.**

1. This document contains confidential, proprietary information of Seiko Epson Corporation or its affiliates. You must keep such information confidential. If the user is a business entity or organization, you must limit disclosure to those of your employees, agents, and contractors who have a need to know and who are also bound by obligations of confidentiality.
2. On the earlier of (a) termination of your relationship with Seiko Epson, or (b) Seiko Epson's request, you must stop using the confidential information. You must then return or destroy the information, as directed by Seiko Epson.
3. If a court, arbitrator, government agency, or the like orders you to disclose any confidential information, you must immediately notify Seiko Epson. You agree to give Seiko Epson reasonable cooperation and assistance in the negotiation.
4. You may use confidential information only for the purpose of operating or servicing the products to which the document relates, unless you obtain the prior written consent of Seiko Epson for some other use.
5. Seiko Epson warrants that it has the right to disclose the confidential information. SEIKO EPSON MAKES NO OTHER WARRANTIES CONCERNING THE CONFIDENTIAL INFORMATION OR ANY OTHER INFORMATION IN THE DOCUMENT, INCLUDING (WITHOUT LIMITATION) ANY WARRANTY OF TITLE OR NON-INFRINGEMENT. Seiko Epson has no liability for loss or damage arising from or relating to your use of or reliance on the information in the document.
6. You may not reproduce, store, or transmit the confidential information in any form or by any means (electronic, mechanical, photocopying, recording, or otherwise) without the prior written permission of Seiko Epson.
7. Your obligations under this Agreement are in addition to any other legal obligations. Seiko Epson does not waive any right under this Agreement by failing to exercise it. The laws of Japan apply to this Agreement.

Cautions

1. This document shall apply only to the product(s) identified herein.
2. No part of this document may be reproduced, stored in a retrieval system, or transmitted in any form or by any means, electronic, mechanical, photocopying, recording, or otherwise, without the prior written permission of Seiko Epson Corporation.
3. The contents of this document are subject to change without notice. Please contact us for the latest information.
4. While every precaution has been taken in the preparation of this document, Seiko Epson Corporation assumes no responsibility for errors or omissions.
5. Neither is any liability assumed for damages resulting from the use of the information contained herein.
6. Neither Seiko Epson Corporation nor its affiliates shall be liable to the purchaser of this product or third parties for damages, losses, costs, or expenses incurred by the purchaser or third parties as a result of: accident, misuse, or abuse of this product or unauthorized modifications, repairs, or alterations to this product, or (excluding the U. S.) failure to strictly comply with Seiko Epson Corporation's operating and maintenance instructions.
7. Seiko Epson Corporation shall not be liable against any damages or problems arising from the use of any options or any consumable products other than those designated as Original EPSON Products or EPSON Approved Products by Seiko Epson Corporation.
8. When this product is used for applications requiring high reliability / safety such as transportation devices related to aviation, rail, marine, automotive etc.; disaster prevention devices; various safety devices etc; or functional / precision devices etc, you should use this product only after giving consideration to including fail-safes and redundancies into your design to maintain safety and total system reliability. Because this product was not intended for use in applications requiring extremely high reliability / safety such as aerospace equipment, main communication equipment, nuclear power control equipment, or medical equipment related to direct medical care etc, please make your own judgment on this product's suitability after a full evaluation.

Trademarks

EPSON® and ESC/POS® are registered trademarks of Seiko Epson Corporation in the United States and other countries.
General Notice: Other product and company names used herein are for identification purposes only and may be trademarks of their respective companies.

GENERAL FEATURES

1) This specification applies to the following products in the TM-T88IV printer:

The following models are available for each product above.

1) Alphanumeric (ANK) model
2) Japanese model
3) Multilingual model

NOTE: The multilingual character model supports printing with one of the following characters:

① Simplified Chinese
② Traditional Chinese

* This specification describes only the outline of the general functions and the model-dependent functions of the commands. For detailed specifications and usage of the commands, please refer to the ESC/POS APG (Application Programming Guide) that is separately issued.

2) Features

The TM-T88IV printer has the following features:

<Printing>

- High-speed printing (200 mm/s {7.9"/s} maximum), which enables issuing of batch receipts.
- Graphics are also printed with a high-speed printing.
- With a two-color print control, two-color printing is possible on the two-color thermal paper.

<Printer handling>

- Easy drop-in paper loading.

<Software>

- Command protocol is based on the ESC/POS Proprietary Command System.
- OPOS ADK and Windows® printer drivers are available.
- In addition to supporting several kinds of bar code printing, two-dimensional code (PDF417, QR code) printing is possible.
- Various layouts are possible by using page mode.
- A maintenance counter function is supported.

<General>

- Various interface boards (EPSON UB series) can be used.

Confidential

TABLE OF CONTENTS

1. GENERAL SPECIFICATIONS 1
1.1 Printing Specifications 1
1.2 Character Specifications 3
1.3 Autocutter 4
1.4 Roll Paper Supply Device 4
1.5 Paper Specification 5
1.6 Printable Area 7
1.7 Printing and Cutting Positions 8
1.8 Internal Buffer 8
1.9 Electrical Characteristics 9
1.10 EMI and Safety Standards Applied 11
1.11 Reliability 11
1.12 Environmental Conditions 12
1.13 Installation 13
2. CONFIGURATION 14
2.1 Interface 14
2.1.1 RS-232 serial interface 14
2.1.2 IEEE 1284 Bidirectional Parallel Interface 19
2.1.3 USB (Universal Serial Bus) Interface 24
2.1.4 Other Interfaces 24
2.2 Connectors 25
2.2.1 Interface Connectors 25
2.2.2 Power Supply Connector 25
2.2.3 Drawer Kick-out Connector (Modular Connector) 26
3. FUNCTIONS 28
3.1 List of Commands 28
3.2 Character Code Tables 32
3.2.1 Common to all pages (International Character Set: USA) 32
3.2.2 Page 0 [PC437: USA, Standard Europe] 33
3.2.3 Page 1 [Katakana] 34
3.2.4 Page 2 [PC850: Multilingual] 35
3.2.5 Page 3 [PC860: Portuguese] 36
3.2.6 Page 4 [PC863: Canadian-French] 37
3.2.7 Page 5 [PC865: Nordic] 38
3.2.8 Page 16 [WPC1252] 39
3.2.9 Page 17 [PC866: Cyrillic #2] 40
3.2.10 Page 18 [PC852: Latin2] 41
3.2.11 Page 19 [PC858: Euro] 42
3.2.12 Page 255 [User-defined page] 43
3.2.13 International Character Sets 44
3.3 Switches and Buttons 45
3.3.1 Power Button 45
3.3.2 Panel Buttons 45
3.3.3 DIP Switches 46
3.3.4 Customized value 50
3.4 Panel LED Indicators 51
3.5 Self-test 52
3.6 Hexadecimal Dumping 53
3.7 NV Graphics Print Mode 54

3.8 Error Processing 55
3.8.1 Error types 55
3.8.2 Printer operation when an error has occurred 56
3.8.3 Data receive error (only with the serial interface medel) 56
3.9 Cover Open Button 57
3.10 Cover Open Sensor 57
3.11 Print Buffer-full Printing 57
3.12 Buzzer (for the model with an internal buzzer) 57

4. CASE SPECIFICATIONS 58
4.1 External Dimensions and Mass 58
4.2 Color 58
4.3 External Appearance 58

5. OPTIONS AND CONSUMABLES 59
5.1 Standard Accessories 59
5.2 Options 59
5.3 Consumables 59

6. COMMANDS 60
6.1 Command Notation 60
6.2 Explanation of Terms 60
6.3 Control Commands 62
HT 62
LF 62
FF (In page mode) 62
CR 62
CAN 63
DLE EOT *n* 63
DLE ENQ *n* 65
DLE DC4 *fn m t* (*fn* = 1) 66
DLE DC4 *fn a b* (*fn* = 2) 67
DLE DC4 *fn d1…d7* (*fn* = 8) 68
ESC FF 68
ESC SP *n* 68
ESC ! *n* 69
ESC $ *nL nH* 69
ESC % *n* 69
ESC & *y c1 c2 [x1 d1...d(y×x1)]...[xk d1...d(y×xk)]* 70
ESC ∗ *m nL nH d1...dk* 70
ESC – *n* 71
ESC 2 71
ESC 3 *n* 71
ESC = *n* 72
ESC ? *n* 72
ESC @ 72
ESC D *n1...nk NUL* 73
ESC E *n* 73
ESC G *n* 73
ESC J *n* 74
ESC L 74
ESC M *n* 74
ESC R *n* 75
ESC S 75
ESC T *n* 76

ESC V *n* 76
ESC W *xL xH yL yH dxL dxH dyL dyH* 77
ESC \ *nL nH* 77
ESC a *n* 78
ESC c 3 *n* 78
ESC c 4 *n* 79
ESC c 5 *n* 79
ESC d *n* 79
ESC p *m t1 t2* 80
ESC t *n* 80
ESC { *n* 81
FS g 1 *m a1 a2 a3 a4 nL nH d1...dk* [obsolete command] 81
FS g 2 *m a1 a2 a3 a4 nL nH* [obsolete command] 82
GS ! *n* 82
GS $ *nL nH* 83
GS (A *pL pH n m* 83
GS (D *pL pH m [a1 b1]...[ak bk]* 84
GS (E *pL pH fn* [parameters] 85
<Function 1> GS (E *pL pH fn d1 d2* (*fn* = 1) 85
<Function 2> GS (E *pL pH fn d1 d2 d3* (*fn* = 2) 86
<Function 5> GS (E *pL pH fn [a1 n1L n1H]...[ak nkL nkH]* (*fn* = 5) 86
<Function 6> GS (E *pL pH fn a* (*fn* = 6) 88
<Function 11> GS (E *pL pH fn a d1...dk* (*fn* = 11) 89
<Function 12> GS (E *pL pH fn a* (*fn* = 12) 89
GS (H *pL pH fn* [parameters] 90
<Function 48> GS (H *pL pH fn m d1 d2 d3 d4* (*fn* = 48) 90
GS (K *pL pH fn* [parameters] 90
<Function 50> GS (K *pL pH fn m* (*fn* = 50) 91
<Function 97> GS (K *pL pH fn m* (*fn* = 97) 91
GS (L *pL pH m fn* [parameters] 92
GS 8 L *p1 p2 p3 p4 m fn* [parameters] 92
<Function 48> GS (L *pL pH m fn* (*fn* = 0, 48) 93
<Function 50> GS (L *pL pH m fn* (*fn* = 2, 50) 93
<Function 51> GS (L *pL pH m fn* (*fn* = 3, 51) 94
<Function 64> GS (L *pL pH m fn d1 d2* (*fn* = 64) 94
<Function 65> GS (L *pL pH m fn d1 d2 d3* (*fn* = 65) 94
<Function 66> GS (L *pL pH m fn kc1 kc2* (*fn* = 66) 95
<Function 67> GS (L *pL pH m fn a kc1 kc2 b xL xH yL yH [c d1…dk]1…[c d1....dk]b* (*fn* = 67) 95
<Function 69> GS (L pL pH m fn kc1 kc2 x y (*fn* = 69) 96
<Function 112> GS (L *pL pH m fn a bx by c xL xH yL yH d1...dk* (*fn* = 112) 97
GS (N *pL pH fn* [parameters] 98
<Function 48> GS (N *pL pH fn m* (*fn* = 48) 98
GS (k *pL pH cn fn* [parameters] 99
<Function 065> GS (k *pL pH cn fn n* (*cn* = 48, *fn* = 65) 100
<Function 066> GS (k *pL pH cn fn n* (*cn* = 48, *fn* = 66) 100
<Function 067> GS (k *pL pH cn fn n* (*cn* = 48, *fn* = 67) 100
<Function 068> GS (k *pL pH cn fn n* (*cn* = 48, *fn* = 68) 101
<Function 069> GS (k *pL pH cn fn m n* (*cn* = 48, *fn* = 69) 102
<Function 070> GS (k *pL pH cn fn m* (*cn* = 48, *fn* = 70) 103
<Function 080> GS (k *pL pH cn fn m d1…dk* (*cn* = 48, *fn* = 80) 103
<Function 081> GS (k *pL pH cn fn m* (*cn* = 48, *fn* = 81) 103
<Function 082> GS (k *pL pH cn fn m* (*cn* = 48, *fn* = 82) 104
<Function 165> GS (k *pL pH cn fn n1 n2* (*cn* = 49, *fn* = 65) 104

<Function 167> GS (k *pL pH cn fn n* (*cn* = 49, *fn* = 67) 104
<Function 169> GS (k *pL pH cn fn n* (*cn* = 49, *fn* = 69) 105
<Function 180> GS (k *pL pH cn fn m d1…dk* (*cn* = 49, *fn* = 80) 105
<Function 181> GS (k *pL pH cn fn m* (*cn* = 49, *fn* = 81) 105
<Function 182> GS (k *pL pH cn fn m* (*cn* = 49, *fn* = 82) 106
GS ∗ *x y d1...dk* [obsolete command] 106
GS / m [obsolete command] 107
GS : 107
GS B *n* 107
GS H *n* 108
GS I *n* 109
GS L *nL nH* 109
GS P *x y* 110
<A> GS V *m* 110
<B> GS V *m n* 110
GS W *nL nH* 110
GS \ *nL nH* 111
GS ^ r *t m* 111
GS a *n* 112
GS b *n* 113
GS f *n* 114
GS g 0 *m nL nH* 114
GS g 2 *m nL nH* 115
GS h *n* 115
<A> GS k *m d1...dk NUL* 116
<B> GS k *m n d1...dn* 116
GS r *n* 118
GS w *n* 119
6.4 Commands of Multi-byte Code 120
FS ! *n* 120
FS & 120
FS – *n* 121
FS 121
FS 2 *c1 c2 d1...dk* 121
FS C *n* 122
FS S *n1 n2* 122
FS W *n* 122
6.5 Obsolete Commands 123
ESC i [obsolete command] 123
ESC m [obsolete command] 123
ESC u n [obsolete command] 124
ESC v [obsolete command] 124
FS p n m [obsolete command] 125
FS q *n [xL xH yL yH d1...dk]1 ... [xL xH yL yH d1...dk]n* [obsolete command] 126
GS v 0 *m xL xH yL yH d1...dk* [obsolete command] 127

APPENDIX A: MISCELLANEOUS NOTES App.1
APPENDIX B: ROLL PAPER SETUP....App.3
APPENDIX C: RECOVERY FROM THE AUTO CUTTER ERROR App.4
APPENDIX D: ADJUSTING THE ROLL PAPER NEAR-END SENSOR LOCATION App.5
APPENDIX E: PRINT HEAD CLEANING....App.7
APPENDIX F: NOTES ON USING THE DRAWER KICK-OUT CONNECTOR....App.8
APPENDIX G: NOTES ON UPDATING THE MAINTENANCE COUNTER AND TURNING THE PRINTER'S POWER OFF App.11
APPENDIX H: NOTES ON PRINTING 2-DIMENSIONAL CODE App.12
APPENDIX H: NOTES ON PRINTING 2-DIMENSIONAL CODE App.12
APPENDIX I: NOTES ON SCANNING THE PRINT RESULT ON THE RECEIPT App.12
APPENDIX J: NOTES ON USING THE ASB STATUS App.13
APPENDIX K: COMPARISON BETWEEN TM-T88IV AND TM-T88III (EXCEPT COMMANDS)....App.14
APPENDIX L: COMPARISON TABLE BETWEEN TM-T88IV AND TM-T88III (COMMANDS)....App.16
APPENDIX M: LOW POWER CONSUMPTION MODE App.17
APPENDIX N: REDUCED DOT PATTERN FONT App.17

1. GENERAL SPECIFICATIONS

1.1 Printing Specifications

1) Printing method:	Thermal line printing
2) Dot density:	180 dpi × 180 dpi [dpi: dots per 25.4 mm {1"}]
3) Printing direction:	Unidirectional with friction feed
4) Paper width:	80 mm 58 mm is available only for the Japanese model. • However, the 80 mm-width paper cannot be used if the 58 mm–width paper is used. • The supported paper width setting cannot be changed after the shipment from the factory.
5) Printing width:	For 80 mm paper width model; 72 mm {2.83"}, 512 dot positions For 58 mm paper width model; 50.8 mm {2"}, 360 dot positions
6) Characters per line (default):	For 80 mm paper width model; Font A: 42 Font B: 56 Kanji: 21 For 58 mm paper width model; Font A: 30 Font B: 40 Kanji: 15
7) Character spacing (default):	Font A: 0.28 mm {0.01"} (2 dots) Font B: 0.28 mm {0.01"} (2 dots) Programmable by control command.
8) Line spacing (default)	4.23 mm {1/6"} Programmable by control command.

9) Printing speed

High speed mode:	Normal:	200 mm/s {7.87"/s} Approximately 47.2 lps (4.23 mm {1/6"} feed/line)
	Page mode printing:	200 mm/s {7. 87"/s}
	Bit-image printing:	200 mm/s {7. 87"/s}
	Raster bit-image printing:	200 mm/s {7. 87"/s}
	Ladder bar code, 2-dimensional code printing:	100 mm/s {3.94"/s}
	Two-color printing:	100 mm/s {3.94"/s} (except when printing ladder bar code or two-dimensional code) 50 mm/s {1.97/s} (when printing ladder bar code or two-dimensional code)
Low power consumption mode:		
	Normal:	150 mm/s {5.91"/s} Approximately 35.5 lps (4.23 mm {1/6"} feed/line)
	Page mode printing:	60 mm/s {2.36"/s}
	Bit-image printing:	60 mm/s {2.36"/s}
	Raster bit-image printing:	60 mm/s {2.36"/s}
	Ladder bar code, 2-dimensional code printing:	60 mm/s {2.36"/s} Cannot print in a two-color

NOTES:
1. The print speed listed above is the value when the printer prints with the standard print density level at 24 V and 25°C {77°F}. However, the print speed listed in the low power consumption mode is the value at 24V and 33°C {91.4°F}. The print speed may change automatically depending on the condition of the supply voltage or the head temperature.
2. Printing speed may be slower depending on the data transmission speed and the combination of control commands.
3. Low transmission speed may cause intermittent printing. It is recommended to transmit data to the printer as quickly as possible.
4. High speed mode or low power consumption mode is selected by a DIP switch. (See Table 3.3.4 and 3.3.7.)
5. The Japanese model does not support the two-color printing and low power consumption mode.

10) Paper feed speed: 200 mm/s {7.87"/s}
(continuous paper feeding)

1.2 Character Specifications

1) Number of characters:

Alphanumeric characters: 95

Extended graphics: 128 × 11 pages (including user-defined page)

International characters: 48

Japanese model: JIS (JIS X0208-1990): 6879
Special font: 845 (See Table below.)

JIS Code	Shift JIS Code
2D21 ~ 2D7E 7921 ~ 7C7E	8740 ~ 879D ED40 ~ EEFC FA40 ~ FC4E

See "Character Code Table (for Japanese font)" for details.

Multilingual character model supports printing with one of the following character sets:

(1) Simplified Chinese (GB18030-2000)
28,553 (∗ International characters: 48)

(2) Traditional Chinese (Big 5)
13,535

Table 1.2.1 Supported Characters on Each Model Type

Product Specifications	Supported Characters	
ANK model	• Alphanumeric • Extended graphics • International characters	--
Japanese model		Japanese characters
Multilingual model (Simplified Chinese)		Simplified Chinese characters
Multilingual model (Traditional Chinese)		Traditional Chinese characters

(ANK = alphanumeric)

2) Character structure:

Font A: 12 × 24 (including 2-dot spacing in horizontal)
Font B: 9 × 17 (including 2-dot spacing in horizontal)
Kanji: 24 × 24

NOTE: The supported fonts are different on each model type. Font A is selected as the default.

3) Character size: See Table 1.2.2.

Table 1.2.2 Character Size

	Standard		Double-height		Double-width		Double-width/ Double-height	
	W×H (mm)	cpl	W×H (mm)	cpl	W×H (mm)	cpl	W×H (mm)	cpl
Font A 12×24	1.41×3.39	42	1.41×6.77	42	2.82×3.39	21	2.82×6.77	21
		30		30		15		15
Font B 9×17	0.99×2.40	56	0.99×4.80	56	1.98×2.40	28	1.98×4.80	28
		40		40		20		20
Kanji 24 × 24	3.39×3.39	21	3.39×6.77	21	6.77×3.39	10	6.77×6.77	10
		15		15		7		7

Space between characters is not included.

Characters can be scaled up to 64 times as large as the standard sizes.

cpl = characters per line

∗ The values listed above in the upper columns are for 80 mm paper width model, in the lower columns are for 58 mm paper width model.

1.3 Autocutter

1) Cutting method: Scissors type with separated blades

2) Cutting type: Partial cut (cutting with one point in left edge left uncut)

NOTES: 1. To prevent dot displacement, after cutting, feed paper approximately 1 mm {14/360"} or more before printing.

2. When operating the autocutter after leaving the printer unused for some time, feed paper 40 mm {1.57"} or longer to prevent paper jams in the autocutter unit.

1.4 Roll Paper Supply Device

1) Supply method: Drop-in paper roll

2) Roll paper end sensor: Detects whether paper is present or not. Detects a roll paper-end during printing, and stops printing if detects a paper-end. The printer resumes printing when paper is loaded and the roll paper cover is closed.

a) Detection method: Microswitch

NOTE: If any paper other than the specified paper is used, the paper roll end sensor may not work correctly.

3) Roll paper near-end sensor: Detects a near-end of a paper roll. When the paper roll diameter becomes sufficiently small, this sensor detects a near-end of the paper roll and lights the PAPER OUT LED. Enabling/disabling of this sensor to stop printing on detection of a paper near-end can be selected by a command (**ESC c 4**).

a) Detection method: Microswitch

b) Near-end adjustment: Can be adjusted by changing the position of the adjusting screw.
Fixed position #1 (approximately 23 mm {0.91"})
#2 (approximately 27 mm {1.06"})

NOTE: If the roll paper with a paper core that is out of the specified range is used, the roll paper near-end detection may not work correctly.

1.5 Paper Specification

1) Paper type: Specified thermal paper

2) Form and size: Roll paper
The chromogenic side must face outside.

a) Roll paper diameter: 83 mm {3.27"} maximum

b) Roll paper core: Inside: 12 mm {0.47"}
Outside: 18 mm {0.71"}
Width: Same with the paper width or less than the paper width for 1 mm.

NOTE: Paper must not be pasted to the roll paper core.

c) Take-up roll paper width: For 80 mm paper width model; 80 +0.5/–1.0 mm {3.15+0.02/–0.04"}
For 58 mm paper width model; 58 +0.5/–1.0 mm {2.28+0.02/–0.04"}

d) Paper width: For 80 mm paper width model; 79.5 ± 0.5 mm {3.13 ± 0.02"}
For 58 mm paper width model; 57.5 ± 0.5 mm {2.26 ± 0.02"}

3) Specified paper: Specified thermal roll paper:
For 80 mm paper width model; NTP080-80
For 58 mm paper width model; NTP058-80
[Original paper: TF50KS-E Nippon Paper Industries Co., Ltd.]

In Japan: Nakagawa Manufacturing Co., Ltd.
In U.S.A.: Nakagawa Mfg. (USA) Inc.
In Europe: Nakagawa Mfg. (Europe) GmbH
In Southeast Asia: N.A.K. Mfg. (Malaysia) SDN BHD

4) Specified original paper type No.:
The following original paper can be used:

NOTE: If paper other than the specified paper is used, the print head may be damaged or the print quality may be poor. Therefore, it is recommended to use the specified paper or its equivalent.

Table 1.5.1 Specified Original Paper Type No. (Single-color paper)

Original Paper Type No.	Manufacture
TF50KS-E, TF60KS-E	NIPPON Paper Industries Co., Ltd.
PD150R, PD160R, PD190R	OJI Paper Mfg. Co., Ltd.
P220AGB-1	Mitsubishi Paper Mills Limited.
P300, P310, P350	Kanzaki Specialty Papers
AF50KS-E	Jujo Thermal Oy
F5041	Mitsubishi HiTec Paper Flensburg GmbH

Table 1.5.2 Specified Original Paper Type No. (Two-color paper)

Original Paper Type No.	Manufacture
P320RB, P320BB	Kanzaki Specialty Papers

5) Notes on using two-color thermal paper

- Two-color printing is performed using two-color thermal paper if the two-color print command is executed and if two-color paper is selected by the customized value setting with Function 5 of the **GS (E** command.
- Do not use signal-color thermal paper when two-color print control is selected in the customized value setting of Function 5 of the **GS (E** command. Doing so may result in faulty printing, deterioration of printer reliability, damage of the print head, and other serious problems.
- If black-color printing is performed when two-color print control is selected, there may be some cases where the print result becomes reddish, depending on the print pattern (*1). Therefore, it is recommended that the user check the printing result in advance.

  *1: Especially when using image data that is formed with one dot in the paper feeding direction.
- If red-color printing is performed when two-color print control is selected, there may be some cases where the print result becomes shaded, depending on the print pattern (*2). Therefore, it is recommended that the user check the printing result in advance.

  *2: Especially when using image data that is formed with different duty in the column direction.
- Color 2 (red or blue on the specified two-color thermal paper) may more easily fade over time, depending on the environmental circumstances. To keep the print for long-term storage, it is recommended to print with Color 1 (black on the specified two-color thermal paper).
- When two-color print control is selected, the printer reliability differs from that when single-color print control is selected. See Section 1.11, Reliability, for details.

6) Print density adjustment

- Depending on the paper type, it is recommended to set the print density as shown in the table below, to keep the print quality. The print density can be set with the DIP switch.

Table 1.5.3 Original Paper type and density level

Original Paper type	Density Level
TF50KS-E, PD150R, PD160R, F5041	Standard
TF60KS-E, P220AGB-1, P300, P310, P350	Medium
AF50KS-E	Medium
PD190R	Medium

- The print density can also be set with the **GS (E** command.

Table 1.5.4 Original Paper type and density level

Original Paper type	Density Level
TF50KS-E, PD150R, PD160R, F5041	7
TF60KS-E, P220AGB-1, P300, P310, P350	8
AF50KS-E	9
PD190R	10

7) Notes on preprinting on the recording surface of thermal paper

When using thermal paper, the recording surface of which has been preprinted, sticking (a problem of the thermal head sticking to the surface of the thermal paper during printing) may occur, causing faulty printing and other problems. It is, therefore, strongly recommended to avoid using preprinted thermal paper. If such paper must be used, conduct preprinting tests under the conditions (type of ink/print conditions) recommended by the paper manufacturer and confirm that no faulty printing, print density, or any other problems occur before you use it for actual printing.

1.6 Printable Area

1) Roll paper

<For 80 mm paper width model>

The printable area of a paper with width of 79.5 ± 0.5 mm {3.13 ± 0.02"} is 72.2 ± 0.2 mm {2.84 ± 0.008"} (512 dots) and the space on the right and left sides are approximately 3.7 ± 2 mm {0.15 ± 0.079"}.

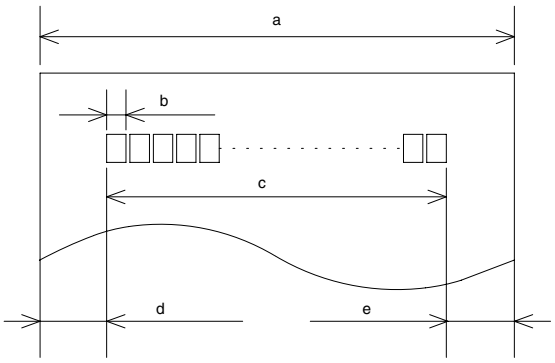

a = 79.5 ± 0.5 mm {3.13 ± 0.02"}

b = 0.141 ± 0.05 mm {0.056 ± 0.002"}

c = 72.2 ± 0.2 mm {2.84 ± 0.008"}

d = 3.7 ± 0.2 mm {0.15 ± 0.079"}

e = 3.7 ± 0.2 mm {0.15 ± 0.079"}

Figure 1.6.1 Roll Paper Printable Area

<For 58 mm paper width model>

The printable area of a paper with width of 57.5 ± 0.5 mm {2.26" ± 0.02"} is 50.8 ± 0.2 mm {2.00" ± 0.008"} (360 dots), and the space is approximately 3.7mm {0.15"} on the left side and approximately 3.0 mm {0.12"} on the right side.

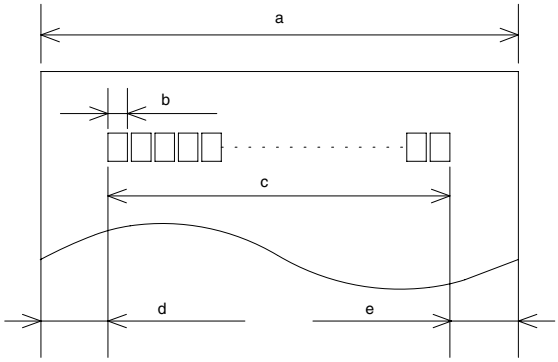

a = 57.5 ± 0.5 mm {2.26 ± 0.02"}

b = 0.141 ± 0.05 mm {0.056 ± 0.002"}

c = 50.8 ± 0.2 mm {2.00 ± 0.008"}

d = 3.7 ± 0.2 mm {0.15 ± 0.079"}.

e = 3.0 ± 0.2 mm {0.12 ± 0.079"}.

Figure 1.6.2 Roll Paper Printable Area

NOTE: With printing with two-part energizing, the print position within the printable area of the thermal elements for dots 257 to 512 is shifted approximately 0.07 mm {0.0028"} in the paper feed direction as shown in Figure 1.6.3 from the position for dots 1 to 256. Although the print area with the 58 mm paper width model is 1 to 360 dots, the bump occurs at the same position as below.

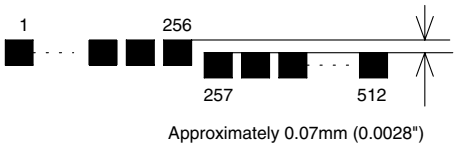

Figure 1.6.3 Shifting of the Print Position

NOTE: With printing with four-part energization, the print position within the printable area of the thermal elements for each block 1 to 96, 97 to 240, 241 to 368, and 369 to 512 is shifted approximately 0.04 mm {0.0016"} in the paper feed direction as shown in Figure 1.6.4. Although the print area with the 58 mm paper width model is 1 to 360 dots, the bump occurs at the same position as below.

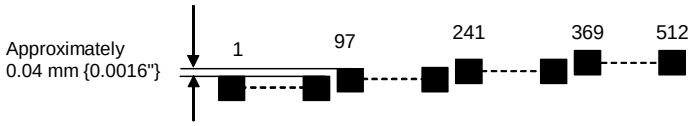

Figure 1.6.4 Shifting of the Print Position

1.7 Printing and Cutting Positions

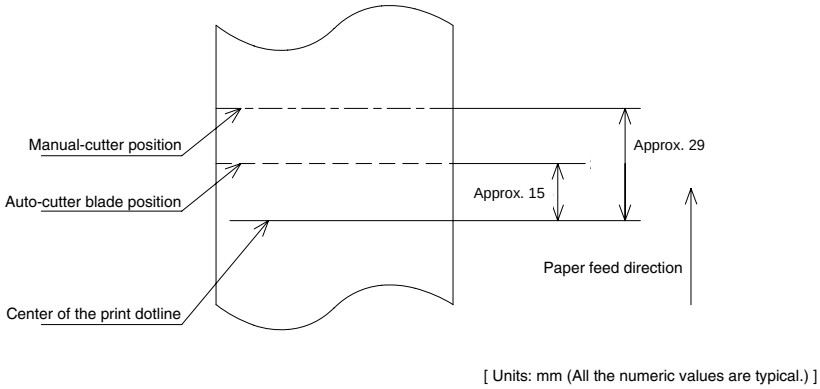

Figure 1.7.1 Printing and Cutting Positions

NOTE: Numeric values used here are typical values; the values may vary slightly as a result of paper slack or variations in the paper. Take this into account when setting the cutting position of the autocutter.

1.8 Internal Buffer

1) Receive buffer: Selectable as 45 bytes or 4 KB using the DIP switch.
2) User-defined buffer (both for user-defined characters and user-defined bit images): 12 KB
3) Macro buffer: 2 KB
4) NV (Non-volatile) graphics memory: 256 KB
5) NV user memory: 1 KB

1.9 Electrical Characteristics

1) Supply voltage: DC+24V ± 7%

2) Current consumption (at 24V, 25°C, normal print density):

Operating: See Table 1.9.1.

Standby: Mean: Approximately 0.1 A

NOTE: Maximum 1 A for drawer kick-out driving.

Table 1.9.1 Current Consumption (Operating)

Print ratio	Approximately 18% (with the print pattern below) Font A, 42 columns, ANK rolling pattern for 100 lines (repeats 20H–7FH)	50% (Printing length: 20 mm)	100% (Printing length: 20 mm)
Print example	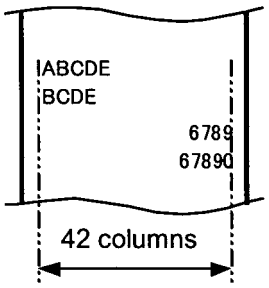	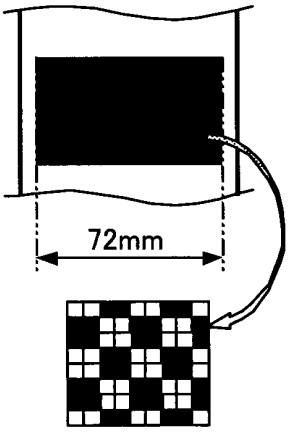	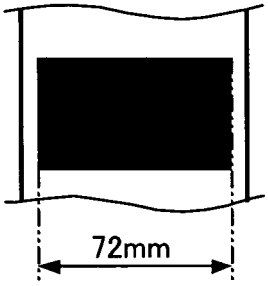
High speed mode	Mean: Approximately 1.8A Peak: Approximately 6.1A	Mean: Approximately 3.3A Peak: Approximately 7.1A	Mean: Approximately 2.8A Peak: Approximately 10.5A
Low current consumption mode	Mean: Approximately 1.1A Peak: Approximately 3.5A	Mean: Approximately 1.7A Peak: Approximately 2.9A	Mean: Approximately 1.9A (See NOTE.) Peak: Approximately 2.9A (See NOTE.)
Two-color print mode	Mean: Approximately 1.5A Peak: Approximately 5.3A	Mean: Approximately 3.6A Peak: Approximately 5.3A	Mean: Approximately 3.2A Peak: Approximately 7.3A

NOTE: 42-columns printing with Font A by the DBH character.
In graphics printing with 100% print ratio:
Mean: Approximately 3.0A
Peak: Approximately 4.5A

NOTES: 1. Notes on using the Epson PS-180 power supply unit

Printing with this product is assumed to use receipt or the equivalent. If the printing is continuously performed with the high print ratio, the overcurrent limitation may be operated. Therefore, the printing length must not exceed the following values when printing with high print ratio.

Print ratio: Number of dots being energized per one dotline / Total number of dots per one dotline (512 dots)

Table 1.9.2 Limitation of the Printing Length on Print Ratio

Print ratio	80%	100%
Print example	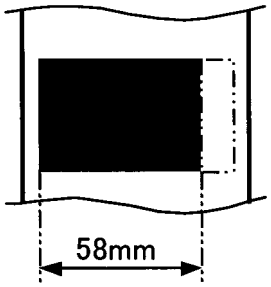	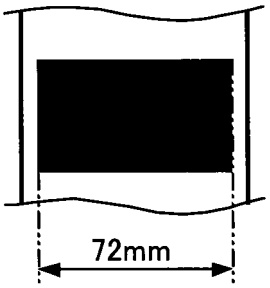
Print length	30 mm or less	20 mm or less

If the overcurrent limitation is operated when printing is continuously performed with a high print ratio, uneven print density or a low voltage error may occur.

2. Notes on using the power supply unit other than the Epson specified one (PS-180)

- The current consumption of this printer is as shown in Figure 1.9.1. User must consider these values when the user provides the power supply unit other than the Epson specified one.
  Note that the current consumption may be increased if the printer is used in a low temperature or the print density is set to “dark”.
- A power supply unit with a small power capacity may not operate the printer correctly.
- Contact Epson if you need more detailed information.

1.10 EMI and Safety Standards Applied

(EMC is tested using an EPSON AC adapter.)

1) Europe — CE marking:
   - Directive: 89/336/EEC
     - EN55022 Class B
     - EN55024
       - IEC61000-4-2
       - IEC61000-4-3
       - IEC61000-4-4
       - IEC61000-4-5
       - IEC61000-4-6
       - IEC61000-4-11

   Safety Standard: EN60950

2) North America — EMI: FCC/ICES-003 Class A
   Safety standards: UL1950/CSA C22.2 No.950

3) Japan — EMC: VCCI Class A

4) Oceania — EMC: AS/NZS CISPR22 Class B

5) Taiwan — EMI: Class B

Conditions of Acceptability

1) This component has been judged on the basis of the required spacing in the Standard for Information Technology equipment, Including Electrical Business Equipment, UL 1950 and CSA C22.2 No. 950, Sub-clause 2.9, which would cover the component itself if submitted for Listing.
2) This unit is intended to be supplied by a SELV circuit only.
3) The terminals and connectors have not been evaluated for field wiring.

1.11 Reliability

1) Life:

Mechanism: 15,000,000 lines
NOTE: Assumed in the condition where a 10 line-printing is repeated in a 15 line-feeding with 4.23 mm line spacing.

Thermal head: 100 million pulses,
100 km (for single-color printing), 50 km (for two-color printing)
NOTE: The life in two-color printing becomes a half of the life in single-color printing.

Auto cutter: 1,500,000 cuts
(End of life is defined to have reached the end of its life when it reaches the beginning of the wearout period.)

2) MTBF: 360,000 hours
(Failure is defined as a random failure occurring at the time of the random failure period.)

3) MCBF: 52,000,000 lines
(This is an average failure interval based on failures related to wearout and random failures up to the life of 15 million lines.)

1.12 Environmental Conditions

1) Temperature: Operating: 5 to 45°C {41 to 113°F}
Storage: -10 to 50°C {14 to 122°F} (except for paper)

2) Humidity: Operating: 10 to 90% RH
Storage: 10 to 90% RH (except for paper)

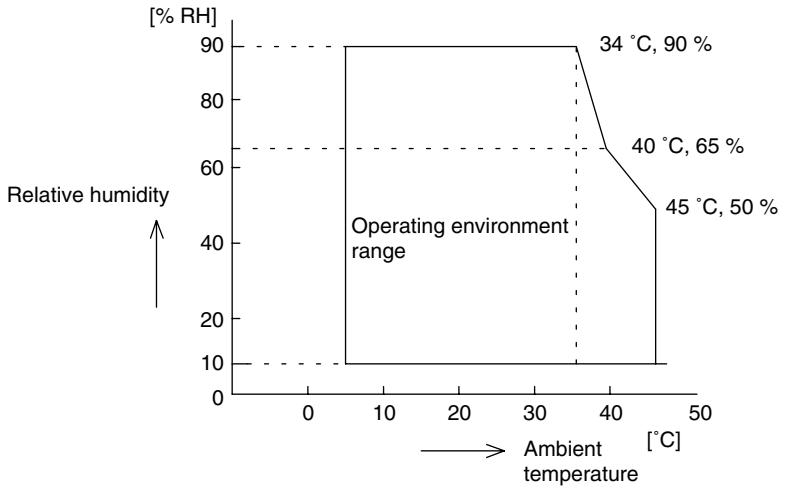

Figure 1.12.1 Operating Temperature and Humidity Range

NOTE: If the printer is not used for a long time with paper installed, some part of the printing may be light due to the deformation of the paper. If the printer is not used for a long time with paper installed, be sure to feed paper approximately 30 mm {1.18"} before printing.

3) Vibration resistance: When Packed:
Frequency: 5 to 55 Hz
Acceleration: Approximately 19.6 m/s^2 {2 G}
Sweep: 10 minutes (half cycle)
Duration: 1 hour
Directions: x, y, and z

No external or internal damage should be found after the vibration test, and the unit should operate normally.

4) Impact resistance: When Packed:
Package: Epson standard package
Height: 60 cm {23.6"}
Directions: 1 corner, 3 edges, and 6 surfaces

No external or internal damage should be found after the drop test, and the unit should operate normally.

When unpacked:
Height: 5 cm {1.97"}
Directions: Lift one edge and release it (for all 4 edges).

When the printer is not printing, no external or internal damage should be found after the drop test.

5) Acoustic noise (Operating): Approximately 55 dB (Bystander position)

NOTE: The values above are measured in the Epson evaluation condition.
The acoustic noise varies depending on the paper used, printing contents, or the setting values such as print speed or print density.

1.13 Installation

The TM-T88IV printer must be installed horizontally.

(Vibration during paper cutting and using a drawer should be considered. Take measures to prevent the printer from moving. Affixing tapes are provided as an option.)

An optional hanging bracket can attach the printer to a wall. (Following the procedures describes in the installation manual, install the wall hanging bracket and change the location of the roll paper near-end sensor (See APPENDIX D.), then install the paper roll stopper and other parts.)

NOTE: When the printer is placed on a wall, be sure to attach the connector cover.

2. CONFIGURATION

2.1 Interface

2.1.1 RS-232 serial interface

2.1.1.1 Specifications

Data transmission:	Serial
Synchronization:	Asynchronous
Handshaking:	DTR/DSR or XON/XOFF control
Signal levels:	MARK = -3 to -15 V: Logic "1"/ OFF SPACE = +3 to +15 V: Logic "0"/ ON
Baud rate:	2400, 4800, 9600, 19200, 38400, 57600, 115200 bps [bps: bits per second]
Data word length:	7 or 8 bits
Parity Settings:	None, even, odd
Stop bits:	1 or more
Connector (printer side):	Female DSUB-25 pin connector

NOTES: 1. The hand shaking, data word length, baud rate, and parity depend on the DIP switch settings. (See Section 3.3.3.)
2. The stop bit for the printer side is fixed to 1.

2.1.1.2 Switching between online and offline

The printer does not have an online/offline switch. The printer goes offline:

1) Between when the power is turned on (including reset through the interface) and when the printer is ready to receive data.
2) During a self-test.
3) When the cover is open.
4) During paper feeding using the paper FEED button.
5) When the printer stops printing due to a paper-end (in cases where a paper-out is detected by the roll paper-end sensor or where a paper-out occurs when a printing halt feature is enabled by **ESC c 4**).
6) When waiting for the paper FEED button to be pressed before macro execution.
7) When an error has occurred.

2.1.1.3 Interface connector terminal assignments and signal functions

Interface connector terminal assignments and signal functions are described in Table 2.1.1.

Table 2.1.1 TM-T88IV Printer Status and Signals

<table>
<tr><th>Pin number</th><th>Signal name</th><th>Signal direction</th><th>Function</th></tr>
<tr><td>1</td><td>FG</td><td>—</td><td>Frame ground</td></tr>
<tr><td>2</td><td>TXD</td><td>Output</td><td>Transmit data</td></tr>
<tr><td>3</td><td>RXD</td><td>Input</td><td>Receive data</td></tr>
<tr><td>4</td><td>RTS</td><td>Output</td><td>Same as DTR signal</td></tr>
<tr><td>6</td><td>DSR</td><td>Input</td><td>This signal indicates whether the host computer can receive data.
SPACE indicates that the host computer can receive data, and MARK indicates that the host computer cannot receive data.
When DTR/DSR control is selected, the printer transmits data after confirming this signal (except when transmitting data by DLE EOT, or GS a).
When XON/XOFF control is selected, the printer does not check this signal.
Changing the DIP switch setting enables this signal to be used as a reset signal for the printer. (See Section 3.3.3.)
The printer is reset when the signal remains to be MARK for 1 ms or more. (See Section 2.1.1.7.)</td></tr>
<tr><td>7</td><td>SG</td><td>—</td><td>Signal ground</td></tr>
<tr><td>20</td><td>DTR</td><td>Output</td><td>1) When DTR/DSR control is selected:
This signal indicates whether the printer is busy. SPACE indicates that the printer is ready to receive data, and MARK indicates that the printer is busy. The busy condition can be changed by using DIP SW 2-1 as follows (See Section 3.3.3.):
The printer goes BUSY (MARK) in the following conditions:
<table>
<tr><th></th><th>Printer status</th><th colspan="2">DIP SW 2-1 status</th></tr>
<tr><th></th><th></th><th>ON</th><th>OFF</th></tr>
<tr><td rowspan="7">Offline</td><td>1. During the period from when the power is turned on (including resetting through the interface) to when the printer becomes ready to receive data.</td><td>BUSY</td><td>BUSY</td></tr>
<tr><td>2. During a self-test.</td><td>BUSY</td><td>BUSY</td></tr>
<tr><td>3. When the cover is open.</td><td>—</td><td>BUSY</td></tr>
<tr><td>4. During paper feeding using the paper FEED button.</td><td>—</td><td>BUSY</td></tr>
<tr><td>5. When the printer stops printing due to a paper-end. (Only when the roll paper is not present.)</td><td>—</td><td>BUSY</td></tr>
<tr><td>6. When waiting for the FEED button to be pressed before macro execution.</td><td>—</td><td>BUSY</td></tr>
<tr><td>7. When an error has occurred.</td><td>—</td><td>BUSY</td></tr>
<tr><td colspan="2">8. When the receive buffer becomes full. (*1)</td><td>BUSY</td><td>BUSY</td></tr>
</table></td></tr>
</table>

Table 2.1.1 TM-T88IV Printer Status and Signals (Continued)

Pin number	Signal name	Signal direction	Function
			2) When XON/XOFF control is selected: The signal indicates whether the printer is correctly connected and is ready to receive data from the host computer. SPACE indicates that the printer is ready to receive data from the host computer. The signal is always SPACE except in the following cases: • During the period from when the power is turned on to when the printer is ready to receive data • During a self-test
25	INIT	Input	Changing the DIP switch setting enables this signal to be used as a reset signal for the printer. The printer is reset when the signal remains to be SPACE for 1 ms or more.

*1 • Definition of "receive buffer full"

- When the receive buffer capacity is specified to 4 KB (DIP SW1-2 is Off):
  - If the DIP SW2-5 is off, when the remaining space in the receive buffer drops to 128 bytes, the printer status becomes "buffer full" and it remains to be "buffer full" until the space in the receive buffer increases to 256 bytes.
  - If the DIP SW2-5 is on, when the remaining space in the receive buffer drops to 128 bytes, the printer status becomes "buffer full" and it remains to be "buffer full" until the space in the receive buffer increases to 138 bytes.
- When the receive buffer capacity is specified to 45 bytes (DIP SW1-2 is On):
  - Regardless of the DIP SW2-5 setting, when the remaining space in the receive buffer drops to 16 bytes, the printer status becomes "buffer full" and it remains to be "buffer full" until the space in the receive buffer increases to 26 bytes.
- The printer ignores the data received when the remaining space in the receive buffer is 0 byte.

2.1.1.4 XON/XOFF transmit timing

When XON/XOFF control is selected, the printer transmits XON or XOFF signals at the timing shown below. Transmission timing differs depending on the DIP SW2-1 setting.

Table 2.1.2 XON/XOFF Transmission Timing

	Printer status	DIP SW 2-1 status	
		ON	OFF
XON transmission	1) When the printer goes online after turning on the power (or reset using interface)	Transmit	Transmit
	2) When the receive buffer is released from the buffer full state	Transmit	Transmit
	3) When the printer switches from offline to online	—	Transmit
	4) When the printer recovers from a recoverable error using the **DLE ENQ 1** or **DLE ENQ 2** commands	—	Transmit
XOFF Transmission	5) When the receive buffer becomes full	Transmit	Transmit
	6) When the printer switches from online to offline	—	Transmit

NOTES: 1. The XON code is <11>H and the XOFF code is <13>H.
2. Even in case 3), XON is not transmitted when the receive buffer is full.
3. Even in case 6), XOFF is not transmitted when the receive buffer is full.

2.1.1.5 Serial interface connection example

Host computer side (DTE ex.8251)	Printer side
TXD	RXD
DSR	DTR
CTS	RTS
RXD	TXD
DTR	DSR
FG	FG
SG	SG

NOTES: 1. Set the handshaking so that the transmit data can be received.
2. Transmit data to the printer after turning on the power and initializing the printer.

2.1.1.6 Notes on setting DIP switch 2-1 to ON

1) The printer mechanism stops but does not become busy when: an error has occurred, the cover is open, the printer stops printing when stop of printing on a paper-end is set, or paper is fed using the paper FEED button.
2) When setting DIP switch 2-1 to ON to enable handshaking with the printer, be sure to check the printer status using the **GS a** command and the ASB function. In this setting, the default value of *n* for **GS a** is 2. The printer automatically transmits the printer status, depending on online/offline changes.
3) When using **DLE EOT**, **DLE ENQ**, and **DLE DC4**, be sure that the receive buffer does not become full.
   - When using a host computer that cannot transmit data when the printer is busy:
     If an error has occurred, **DLE EOT**, **DLE ENQ**, and **DLE DC4** cannot be used when the printer is busy due to a receive buffer-full state.
   - When using a host computer that can transmit data when the printer is busy:
     When the receive buffer becomes full while transmitting bit-image data, **DLE EOT**, **DLE ENQ** or **DLE DC4** used while transmitting the bit-image data is processed as bit-image data. The data transmitted when the receive buffer is full may be lost.

     Example: Check the printer status using **GS r** after transmitting each line of data and use the 4 KB receive buffer. Data amount of one line must not make the receive buffer full.

2.1.1.7 Notes on Resetting the Printer Using the Interface

The printer can be reset using interface pins 6 and 25 by changing the DIP switch setting. (See Section 3.3.3, DIP switch 2.)

Table 2.1.3 Reset Switching

Signal Line	DIP Switch	Reset Condition
Pin 6 (DSR)	DSW 2-7: ON	MARK level input
Pin 25 (INIT)	DSW 2-8: ON	SPACE or TTL-HIGH level input

To reset the printer, the following requirements must be satisfied.

- DC characteristics:

Table 2.1.4 Reset DC Characteristics

		Pin 6 (DSR)	Pin 25 (INIT)
Reset active voltage	V_A	-15 to -3 V	+2 to +15 V
Reset negative voltage	V_N	+3 to +15 V	-15 to + 0.8 V
Reset active current	I_A	-5.3 mA (maximum)	1 mA (maximum)
Reset negative current	I_N	-5.0 mA (maximum)	-2 mA (maximum)
Input impedance	R_{IN}	3 kΩ (minimum)	

- AC characteristics:
  Minimum reset pulse width: T_{RS} 1 ms (minimum)
  - When using pin 6 (DSR) (DIP switch 2-7 is ON):

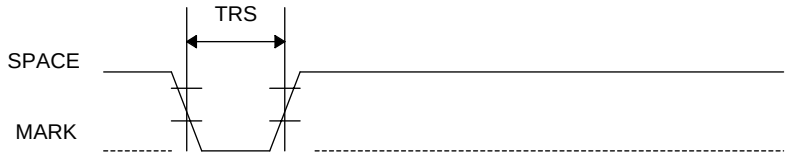

Figure 2.1.1 Minimum Reset Pulse Width (pin 6)

  - When using pin 25 (INIT) (DIP switch 2-8 is ON):

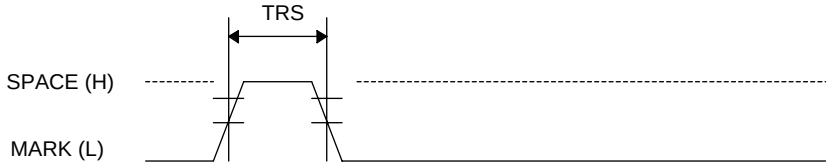

Figure 2.1.2 Minimum Reset Pulse Width (pin 25)

NOTES: 1. When a signal that does not satisfy the requirements above is input, printer operation is not guaranteed. When a signal is input to pin 25 (INIT) at the TTL level, the requirements above must also be satisfied. Although a signal is input to pin 6 (DSR) at the TTL level, according to the DC characteristics described above, the operation is not guaranteed and pin 6 cannot be controlled.

2. When pin 6 (DSR) and pin 25 (INIT) are open, the printer is operating.

2.1.2 IEEE 1284 Bidirectional Parallel Interface

Copyright © 1994 by the Institute of Electrical and Electronic Engineers, Inc.

2.1.2.1 Compatibility Mode

(Data Transmission from Host to Printer: Centronics compatible)

1) Outline

Compatibility mode supports the compatibility with Centronics parallel interface.

2) Specifications

Data transmission:	8-bit Parallel
Synchronization:	Externally supplied nStrobe signals
Handshaking:	nAck and Busy signals
Signal levels:	TTL compatible
Connector:	ADS-B36BLFDR176 (Honda) or equivalent (IEEE 1284 Type B)

3) Switching between online and offline

The printer is not equipped with any online/offline switch. The printer is placed into offline status under any of the following conditions:

(1) When the power is turned on or until the printer becomes ready for data transmission after it is initialized by the reset signal (nInit) from the interface.
(2) During the self-test.
(3) When the cover is open.
(4) During paper feeding using the paper FEED button.
(5) When the printer stops printing due to a paper-end. (When the paper sensor that enables a stop of printing set by **ESC c 4** operates.)
(6) When waiting for the FEED button to be pressed before macro execution.
(7) When an error has occurred.

2.1.2.2 Reverse Mode (Data Transmission from Printer to Host)

The STATUS data transmission from the printer to the host computer is performed in the Nibble mode or Byte mode.

- Description

  This mode allows data transmission from the asynchronous printer under the control of the host computer.
  Data transmissions in the Nibble Mode are made via the existing control lines in units of four bits (a Nibble). In the Byte Mode, data transmissions proceeded by making the eight-bits data lines bidirectional.
  Both modes fail to proceeded concurrently in the Compatibility Mode, causing half duplex transmission.

2.1.2.3 Interface Pin Assignments for Each Mode

Pin	Source	Compatibility Mode	Nibble Mode	Byte Mode
1	Host	nStrobe	HostClk	HostClk
2	Host/Ptr	Data0(LSB)	Data0(LSB)	Data0(LSB)
3	Host/Ptr	Data1	Data1	Data1
4	Host/Ptr	Data2	Data2	Data2
5	Host/Ptr	Data3	Data3	Data3
6	Host/Ptr	Data4	Data4	Data4
7	Host/Ptr	Data5	Data5	Data5
8	Host/Ptr	Data6	Data6	Data6
9	Host/Ptr	Data7(MSB)	Data7(MSB)	Data7(MSB)
10	Printer	nAck	PtrClk	PtrClk
11	Printer	Busy	PtrBusy/Data3, 7	PtrBusy
12	Printer	PError	AckDataReq/Data2, 6	AckDataReq
13	Printer	Select	Xflag/Data1, 5	Xflag
14	Host	nAutoFd	HostBusy	HostBusy
15		NC	ND	ND
16		GND	GND	GND
17		FG	FG	FG
18	Printer	Logic-H	Logic-H	Logic-H
19		GND	GND	GND
20		GND	GND	GND
21		GND	GND	GND
22		GND	GND	GND
23		GND	GND	GND
24		GND	GND	GND
25		GND	GND	GND
26		GND	GND	GND
27		GND	GND	GND
28		GND	GND	GND
29		GND	GND	GND
30		GND	GND	GND
31	Host	nInit	nInit	nInit
32	Printer	nFault	nDataAvail/Data0, 4	nDataAvail
33		GND	ND	ND
34	Printer	DK_STATUS	ND	ND
35	Printer	+5V	ND	ND
36	Host	nSelectIn	1284-Active	1284-Active

*NC: Not Connected
ND: Not Defined

NOTES:
1. A prefix “n” to signal names indicates “L” active signals. To the host computer not provided with all of the signal lines listed above, both-way communication fails.
2. For interfacing, signal lines shall use twisted pair cables with the return sides connected to signal ground level. Follow the IEEE Std 1284 for the specifications of the interface cable.
3. Interfacing conditions shall be all based on the TTL level to meet the characteristics described below. In addition, both rise time and fall time of each signal shall be 0.5 µs or less.
4. Data transmission shall not ignore the signal nAck or Busy. An attempt to transmit data with either signal, nAck or Busy, ignored can cause data loss.
5. Interface cables shall be as minimum required short in length as possible.

2.1.2.4 Electrical Characteristics

DC Characteristics (Except Logic-H, +5 V signals)

Characteristics	Symbol	Specifications		Conditions
		Min	Max	
Output HIGH voltage	V_{OH}	*2.4 V	5.5 V	*I_{OH}=0.32 mA
Output LOW voltage	V_{OL}	-0.5 V	*0.4 V	*I_{OL}=-12 mA
Output HIGH current	I_{OH}	0.32 mA	–	V_{OH}=2.4 V
Output LOW current	I_{OL}	-12 mA	–	V_{OL}=0.4 V
Input HIGH voltage	V_{IH}	2.0 V	–	
Input LOW voltage	V_{IL}	–	0.8 V	
Input HIGH current	I_{IH}	–	-0.32 mA	V_{IH}=2.0 V
Input LOW current	I_{IL}	–	12 mA	V_{IL}=0.8 V

Logic-H Signal Sender Characteristics

Characteristics	Symbol	Specifications		Conditions
		Min	Max	
Output HIGH voltage	V_{OH}	3.0 V	5.5 V	
Output LOW voltage	V_{OL}	–	2.0 V	While the power is OFF

+5 V Signal Sender Characteristics

Characteristics	Symbol	Specifications		Conditions
		Min	Max	
Output HIGH voltage	V_{OH}	*2.4 V	5.5 V	*I_{OH}=0.32 mA
Output LOW voltage	V_{OL}	–	– **	While the power is OFF
Output HIGH current	I_{OH}	–	0.32 mA	V_{OH}=2.4 V
Output LOW current	I_{OL}	– **	–	While the power is OFF

** No guarantee is offered to V_{OL} and I_{OL} while the power is OFF.

2.1.2.5 Data Receiving Timing (Compatibility Mode)

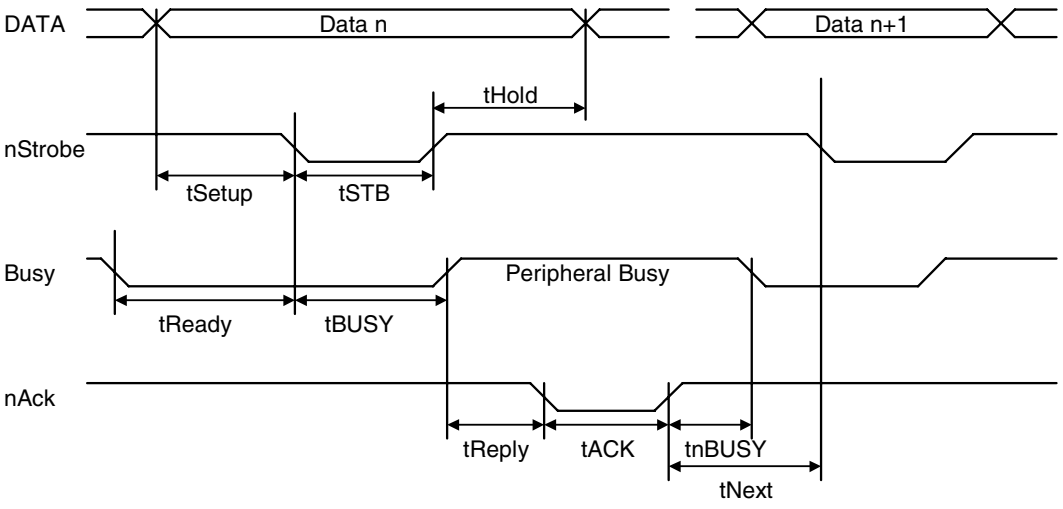

Characteristics	Symbol	Specifications	
		Min[ns]	Max[ns]
Data Hold Time (host)	tHold	750	–
Data Setup Time	tSetup	750	–
STROBE Pulse Width	tSTB	750	–
READY Cycle Idle Time	tReady	0	–
BUSY Output Delay Time	tBUSY	0	500
Data Processing Time	tReply	0	∞
ACKNLG Pulse Width	tACK	500	10µs
BUSY Release Time	tnBUSY	0	∞
ACK Cycle Idle Time	tNext	0	–

*The printer latches data at a nStrobe ↓ timing

2.1.2.6 Notes on resetting the printer through the interface

To enable the printer reset through the interface nlnit signal (pin #31) in compatibility mode, satisfy the following characteristics; however, note that the printer reset signal is ignored when the signal nSelectln (#36 pin, 1284-Actie high) is active in reverse mode.

- DC characteristic:
  TTL level
- AC characteristics:

Minimum reset pulse width:	TRS	50 µs (min.)
Trailing edge period:	tf	500 ns (max.)
Leading edge period:	tr	500 ns (max.)

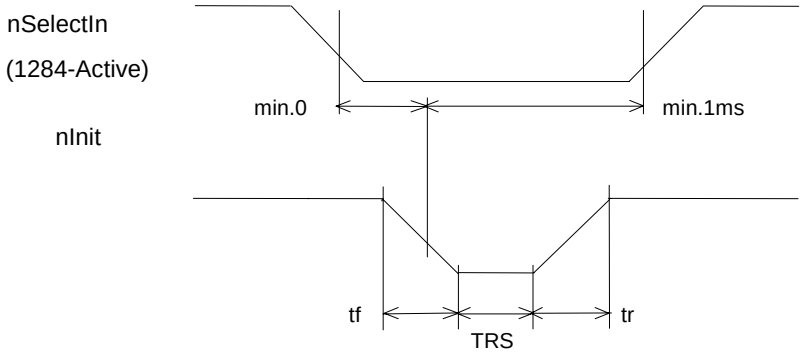

2.1.2.7 Reception of status from the printer through the bidirectional parallel interface

In the bidirectional parallel interface specifications, the printer status transmission is available by using the both-way communication facility in the Nibble/Byte Modes in accordance with the IEEE 1284.

In this case, as opposed to the RS-232 serial interface specifications, the real-time interruptions from the printer to the host computer are disabled and thus precautions must be taken to the following:

1) The allowable capacity of the printer internal buffer is 99 bytes (except ASB status). The status signals exceeding this capacity will be discarded. To prevent possible loss of status, the host computer shall be ready for data reception (Reverse mode).
2) When ASB is used, the host computer is preferably in the wait state for data reception (Reverse idle mode). When this state is not available, the host computer shall enter the Reverse mode to constantly monitor the presence of data.
3) When ASB is used, preference shall be given to the ASB status for transmission over the other status signals in the Reverse Mode.

2.1.2.8 Notes on setting DIP switch 2-1 to ON

See Section 2.1.1.6.

2.1.3 USB (Universal Serial Bus) Interface

When the UB series interface board below is used, the built-in USB controller operates:

UB-U05, UB-U06, UB-U19

Outline 1. High-speed transmission at 480 Mbps [bps: bits per second]
2. Plug&Play, Hot Insertion & Removable

* The USB interface specifications for other UB-U** series cannot be used.

2.1.3.1 USB transmission specifications

1) USB function

Overall specifications:	Comform to USB 2.0 specifications
Transmission speed:	USB Full-Speed (12 Mbps)
Transmission method:	USB bulk transmission method
Power supply specifications:	USB self power supply function
Current consumed by USB bus:	0 mA (provided entirely from the unit)
USB packet size	
With Full-Speed connection:	USB bulk OUT (TM) 64 bytes USB bulk IN (TM) 64 bytes

2) Status transmission from printer with USB interface

With this interface, the status of the printer is transmitted to the host computer via the USB bulk transmission method.

The USB bulk transmission method is a host-controlled transmission method. Unlike RS232 transmission, it cannot spontaneously interrupt data transmission to the host computer.

The printer has a 128-byte status data buffer. Statuses that exceed the buffer capacity are cancelled. In order to avoid lack of status data, it is necessary to periodically retrieve status data at the host computer.

2.1.4 Other Interfaces

Various interface boards (EPSON UB series) can be used.

However, the following models with the buzzer function cannot be used.

- UB-E02A
- UB-R02A

If the above models are used, the printer or the interface board may be damaged.

As for the combination of the printer and the UB series, see “TM-UIB combination” specifications.

2.2 Connectors

2.2.1 Interface Connectors

See Section 2.1, Interface.

2.2.2 Power Supply Connector

This connector is used to connect the printer to an external power source.

1) Pin assignments: See Table 2.2.1.

Table 2.2.1 Power Supply Connector Pin Assignments

Pin Number	Signal Name
1	+24 V
2	GND
3	N.C
SHELL	F.G.

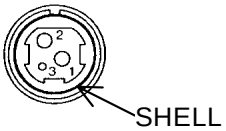

Figure 2.2.1 Power Supply Connector

NOTE: Be sure to ground the metal of the interface using the locking screw for the frame ground.

2) Connector model: Printer side: Hosiden TCS7960-532010 or the equivalent
User side: Hosiden TCP8927-631100 or the equivalent
Hosiden TCP8927-531100 or the equivalent

2.2.3 Drawer Kick-out Connector (Modular Connector)

The pulse specified by **ESC p** or **DLE DC4** is output to this connector. The host computer can confirm the status of the input signal by using the **DLE EOT**, **GS a**, or **GS r** commands.

1) Pin assignments: See Table 2.2.2.

Table 2.2.2 Drawer Kick-out Connector Pin Assignments

Pin Number	Signal Name	Direction
1	Frame GND	—
2	Drawer kick-out drive signal 1	Output
3	Drawer open/close signal	Input
4	+24 V	—
5	Drawer kick-out drive signal 2	Output
6	Signal GND	—

+24 V is output through pin 4 when the power is turned on. However, pin 4 must be used only for the drawer.

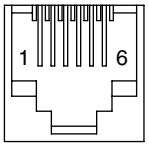

Figure 2.2.2 Drawer Kick-out Connector

2) Connector model: Printer side: MOLEX 52065-6615 or the equivalent
User side: 6-position 6-contact (RJ12 telephone jack)

3) Drawer kick-out drive signal
Output signal: Output voltage: Approximately 24 V
Output current: 1 A or less

CAUTION: To avoid an overcurrent, the resistance of the drawer kick-out solenoid must be 24 Ω or more.

Output waveform: Outputs the waveforms in Figure 2.2.3 to the points A and B in Figure 2.2.4.
t1 (ON time) and *t2* (OFF time) are specified by **ESC p** or **DLE DC4**.

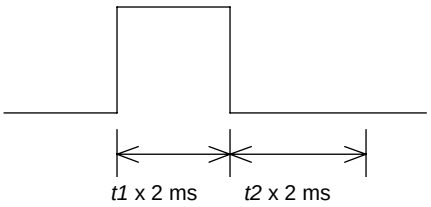

Figure 2.2.3 Drawer Kick-out Drive Signal Output Waveform

4) Drawer open/close signal

Input signal level (connector pin 3): "L" = 0 to 0.8 V
"H" = 2 to 5 V

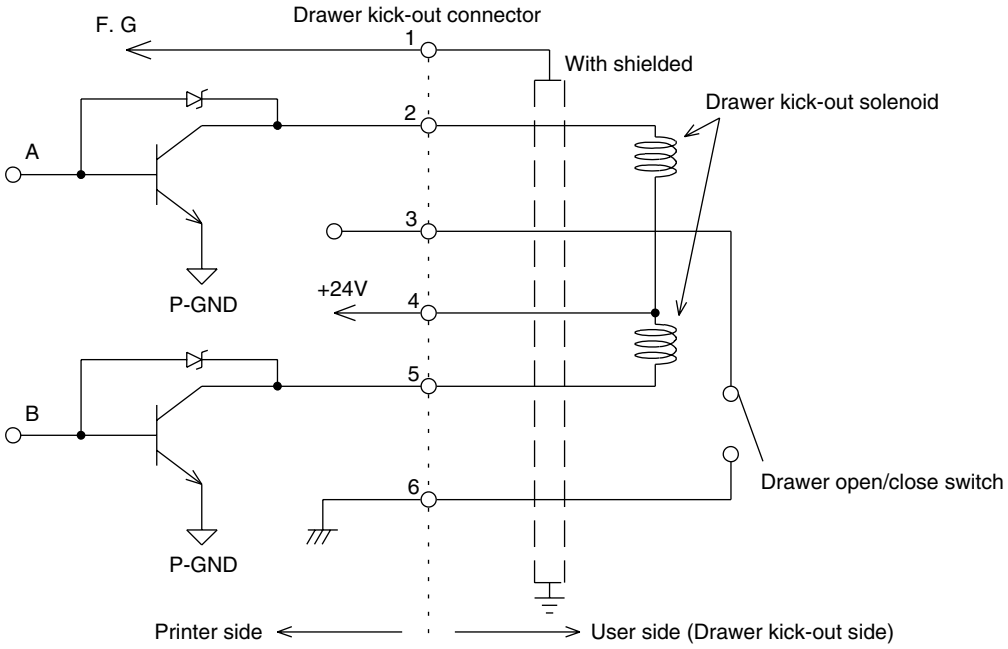

Figure 2.2.4 Drawer Circuitry

NOTES:
1. Use a shielded cable for the drawer connector cable.
2. Two driver transistors cannot be energized simultaneously.
3. The drawer drive duty must be as shown below.

$$\frac{\text{ON time}}{(\text{ON time} + \text{OFF time})} \leq 0.2$$

4. Be sure to use the printer power supply (connector pin 4) for the drawer power source.
5. The resistance of the drawer kick-out solenoid must not be less than the specified. Otherwise, an overcurrent could damage the solenoid.
6. Do not connect telecommunication network to the drawer kick-out connector.

3. FUNCTIONS

3.1 List of Commands

Command	Name	
HT	Horizontal tab	*HT*
LF	Print and line feed	*LF*
FF	Print and return to standard mode (in page mode)	*FF*
CR	Print and carriage return	*CR*
CAN	Cancel print data in page mode	*CAN*
DLE EOT	Transmit real-time status	*DLE EOT*
DLE ENQ	Send real-time request to printer	*DLE ENQ*
DLE DC4	Generate pulse in real-time (*fn* = 1)	*DLE DC4 FN=1*
	Execute power-off sequence (*fn* = 2)	*DLE DC4 FN=2*
	Clear buffer(s) (*fn* = 8)	*DLE DC4 FN=8*
ESC FF	Print data in page mode	*ESC FF*
ESC SP	Set right-side character spacing	*ESC SP*
ESC !	Select print mode(s)	*ESC !*
ESC $	Set absolute print position	*ESC $*
ESC %	Select/cancel user-defined character set	*ESC %*
ESC &	Define user-defined characters	*ESC &*
ESC ∗	Select bit-image mode	*ESC **
ESC –	Turn underline mode on/off	*ESC -*
ESC 2	Select default line spacing	*ESC 2*
ESC 3	Set line spacing	*ESC 3*
ESC =	Select peripheral device	*ESC =*
ESC ?	Cancel user-defined characters	*ESC ?*
ESC @	Initialize printer	*ESC @*
ESC D	Set horizontal tab positions	*ESC D*
ESC E	Turn emphasized mode on/off	*ESC E*
ESC G	Turn double-strike mode on/off	*ESC G*
ESC J	Print and feed paper	*ESC J*
ESC L	Select page mode	*ESC L*
ESC M	Select character font	*ESC M*
ESC R	Select an international character set	*ESC R*
ESC S	Select standard mode	*ESC S*
ESC T	Select print direction in page mode	*ESC T*
ESC V	Turn 90° clockwise rotation mode on/off	*ESC V*
ESC W	Set print area in page mode	*ESC W*
**ESC **	Set relative print position	*ESC *

Command	Name
ESC a	Select justification ESC a
ESC c 3	Select paper sensor(s) to output paper-end signals ESC c 3
ESC c 4	Select paper sensor(s) to stop printing ESC c 4
ESC c 5	Enable/disable panel buttons ESC c 5
ESC d	Print and feed *n* lines ESC d
ESC p	Generate pulse ESC p
ESC t	Select character code table ESC t
ESC {	Turn upside-down print mode on/off ESC {
FS g 1	Write to NV user memory FS g 1
FS g 2	Read from NV user memory FS g 2
GS !	Select character size GS !
GS $	Set absolute vertical print position in page mode GS $
GS (A	Execute test print GS (A
GS (D	Enable/disable real-time command GS (D
GS (E	Set user setup commands GS (E <Function 1> Change into the user setting mode. <Function 2> End the user setting mode session. <Function 5> Set the customized setting values. <Function 6> Transmit the customized setting values. <Function 11> Set the configuration item for the serial interface. <Function 12> Transmit the configuration item for the serial interface.
GS (H	Request transmission of response or status GS (H <Function 48> Set the process ID response.
GS (K	Select print control method(s) GS (K <Function 50> Select the print speed. <Function 97> Select the number of parts for the thermal head energizing.
GS (L / GS 8 L	Set graphics data GS (L/GS 8 L <Function 48> Transmit the NV graphics memory capacity. <Function 50> Print the graphics data in the print buffer. <Function 51> Transmit the remaining capacity of the NV graphics memory. <Function 64> Transmit the key code list for defined NV graphics. <Function 65> Delete all NV graphics data. <Function 66> Delete the specified NV graphics data. <Function 67> Define the NV graphics data (raster format). <Function 69> Print the specified NV graphics data. <Function 112> Store the graphics data in the print buffer (raster format).
GS (N	Select character style(s) GS (N <Function 48> Select character color.

Command	Name
GS (k	Set up and print symbol GS (k <Function 065> PDF417: Set the number of columns in the data region. <Function 066> PDF417: Set the number of rows. <Function 067> PDF417: Set the width of the module. <Function 068> PDF417: Set the row height. <Function 069> PDF417: Set the error correction level. <Function 070> PDF417: Select the options. <Function 080> PDF417: Store the data in the symbol storage area. <Function 081> PDF417: Print the symbol data in the symbol storage area. <Function 082> PDF417: Transmit the size information of the symbol data in the symbol storage area. <Function 165> QR Code: Select the model. <Function 167> QR Code: Set the size of module. <Function 169> QR Code: Select the error correction level. <Function 180> QR Code: Store the data in the symbol storage area. <Function 181> QR Code: Print the symbol data in the symbol storage area. <Function 182> QR Code: Transmit the size information of the symbol data in the symbol storage area.
GS ∗	Define downloaded bit image GS *
GS /	Print downloaded bit image GS /
GS :	Start/end macro definition GS :
GS B	Turn white/black reverse print mode on/off GS B
GS H	Select print position of HRI characters GS H
GS I	Transmit printer ID GS I
GS L	Set left margin GS L
GS P	Set horizontal and vertical motion units GS P
GS V	Select cut mode and cut paper GS V
GS W	Set print area width GS W
**GS **	Set relative vertical print position in page mode GS \
GS ^	Execute macro ESC ^
GS a	Enable/disable Automatic Status Back (ASB) GS a
GS b	Turn smoothing mode on/off GS b
GS f	Select font for HRI characters GS f
GS g 0	Initialize maintenance counter GS g 0
GS g 2	Transmit maintenance counter GS g 2
GS h	Set bar code height GS h
GS k	Print bar code GS k
GS r	Transmit status GS r
GS w	Set bar code width GS w

List of Multi-byte Code Characters Commands
(for Japanese model, Simplified Chinese model, and Traditional Chinese model)

Command	Name
FS !	Select print mode(s) for Kanji characters FS !
FS &	Select Kanji character mode FS &
FS –	Turn underline mode on / off for Kanji characters FS -
FS .	Cancel Kanji character mode FS .
FS 2	Define user-defined Kanji characters FS 2
FS C	Select Kanji character code system FS C
FS S	Set Kanji character spacing FS S
FS W	Turn quadruple-size mode on / off for Kanji characters FS W

The commands listed below in the first column are defined as “obsolete commands” in the ESC/POS command system. This printer supports both upward-compatible commands and obsolete commands. However, the upward-compatible commands are recommended to use.

Obsolete command		Upward-compatible command
ESC i	Partial cut (one point left uncut)	**GS V**
ESC m	Partial cut (three points left uncut)	**GS V**
ESC u	Transmit peripheral device status	**GS r**
ESC v	Transmit paper sensor status	**GS r**
FS p	Print NV bit image	**GS (L** <Function 69>
FS q	Define NV bit image	**GS (L** <Function 67>
GS v 0	Print raster bit image	**GS (L** <Function 112 + 50>

NOTE: “Obsolete commands” are commands that are supported by legacy models; however it is recommended to replace them with upward-compatible commands, because they will not be supported in the future products.

3.2 Character Code Tables

- The character code tables show only character configurations. They do not show the actual print pattern.
- "SP" in the table shows space.

3.2.1 Common to all pages (International Character Set: USA)

HEX	0	1	2	3	4	5	6	7
0	NUL 00	DLE 16	SP 32	0 48	@ 64	P 80	` 96	p 112
1	01	XON 17	! 33	1 49	A 65	Q 81	a 97	q 113
2	02	18	" 34	2 50	B 66	R 82	b 98	r 114
3	03	XOFF 19	# 35	3 51	C 67	S 83	c 99	s 115
4	EOT 04	DC4 20	$ 36	4 52	D 68	T 84	d 100	t 116
5	ENQ 05	NAK 21	% 37	5 53	E 69	U 85	e 101	u 117
6	ACK 06	22	& 38	6 54	F 70	V 86	f 102	v 118
7	07	23	' 39	7 55	G 71	W 87	g 103	w 119
8	08	CAN 24	(40	8 56	H 72	X 88	h 104	x 120
9	HT 09	25	) 41	9 57	I 73	Y 89	i 105	y 121
A	LF 10	26	* 42	: 58	J 74	Z 90	j 106	z 122
B	11	ESC 27	+ 43	; 59	K 75	[91	k 107	{ 123
C	FF 12	FS 28	, 44	< 60	L 76	\ 92	l 108	| 124
D	CR 13	GS 29	– 45	= 61	M 77	] 93	m 109	} 125
E	14	RS 30	. 46	> 62	N 78	^ 94	n 110	~ 126
F	15	31	/ 47	? 63	O 79	_ 95	o 111	SP 127

3.2.2 Page 0 [PC437: USA, Standard Europe]

HEX	8	9	A	B	C	D	E	F
0	Ç 128	É 144	á 160	░ 176	└ 192	╨ 208	α 224	≡ 240
1	ü 129	æ 145	í 161	▒ 177	┴ 193	╤ 209	β 225	± 241
2	é 130	Æ 146	ó 162	▓ 178	┬ 194	╥ 210	Γ 226	≥ 242
3	â 131	ô 147	ú 163	│ 179	├ 195	╙ 211	π 227	≤ 243
4	ä 132	ö 148	ñ 164	┤ 180	─ 196	╘ 212	Σ 228	⌠ 244
5	à 133	ò 149	Ñ 165	╡ 181	┼ 197	╒ 213	σ 229	⌡ 245
6	å 134	û 150	ª 166	╢ 182	╞ 198	╓ 214	µ 230	÷ 246
7	ç 135	ù 151	º 167	╖ 183	╟ 199	╫ 215	τ 231	≈ 247
8	ê 136	ÿ 152	¿ 168	╕ 184	╚ 200	╪ 216	Φ 232	° 248
9	ë 137	Ö 153	⌐ 169	╣ 185	╔ 201	┘ 217	Θ 233	• 249
A	è 138	Ü 154	¬ 170	║ 186	╩ 202	┌ 218	Ω 234	· 250
B	ï 139	¢ 155	½ 171	╗ 187	╦ 203	█ 219	δ 235	√ 251
C	î 140	£ 156	¼ 172	╝ 188	╠ 204	▄ 220	∞ 236	ⁿ 252
D	ì 141	¥ 157	¡ 173	╜ 189	═ 205	▌ 221	Φ 237	² 253
E	Ä 142	Pt 158	« 174	╛ 190	╬ 206	▐ 222	ε 238	■ 254
F	Å 143	ƒ 159	» 175	┐ 191	╧ 207	▀ 223	∩ 239	SP 255

3.2.3 Page 1 [Katakana]

HEX	8	9	A	B	C	D	E	F
0	_ 128	┴ 144	SP 160	ー 176	ﾀ 192	ﾐ 208	═ 224	╳ 240
1	▬ 129	┬ 145	｡ 161	ｱ 177	ﾁ 193	ﾑ 209	╞ 225	円 241
2	▬ 130	┤ 146	｢ 162	ｲ 178	ﾂ 194	ﾒ 210	╪ 226	年 242
3	▬ 131	├ 147	｣ 163	ｳ 179	ﾃ 195	ﾓ 211	╡ 227	月 243
4	■ 132	━ 148	､ 164	ｴ 180	ﾄ 196	ﾔ 212	◢ 228	日 244
5	■ 133	━ 149	･ 165	ｵ 181	ﾅ 197	ﾕ 213	◣ 229	時 245
6	■ 134	│ 150	ｦ 166	ｶ 182	ﾆ 198	ﾖ 214	◥ 230	分 246
7	■ 135	│ 151	ｧ 167	ｷ 183	ﾇ 199	ﾗ 215	◤ 231	秒 247
8	│ 136	┌ 152	ｨ 168	ｸ 184	ﾈ 200	ﾘ 216	♠ 232	〒 248
9	┃ 137	┐ 153	ｩ 169	ｹ 185	ﾉ 201	ﾙ 217	♥ 233	市 249
A	┃ 138	└ 154	ｪ 170	ｺ 186	ﾊ 202	ﾚ 218	♦ 234	区 250
B	┃ 139	┘ 155	ｫ 171	ｻ 187	ﾋ 203	ﾛ 219	♣ 235	町 251
C	┃ 140	┌ 156	ｬ 172	ｼ 188	ﾌ 204	ﾜ 220	● 236	村 252
D	┃ 141	┐ 157	ｭ 173	ｽ 189	ﾍ 205	ﾝ 221	○ 237	人 253
E	┃ 142	└ 158	ｮ 174	ｾ 190	ﾎ 206	ﾞ 222	╱ 238	▒ 254
F	┼ 143	┘ 159	ｯ 175	ｿ 191	ﾏ 207	ﾟ 223	╲ 239	SP 255

3.2.4 Page 2 [PC850: Multilingual]

HEX	8	9	A	B	C	D	E	F
0	Ç 128	É 144	á 160	░ 176	└ 192	ð 208	Ó 224	– 240
1	ü 129	æ 145	í 161	▒ 177	┴ 193	Ð 209	β 225	± 241
2	é 130	Æ 146	ó 162	▓ 178	┬ 194	Ê 210	Ô 226	‗ 242
3	â 131	ô 147	ú 163	│ 179	├ 195	Ë 211	Ò 227	¾ 243
4	ä 132	ö 148	ñ 164	┤ 180	─ 196	È 212	õ 228	¶ 244
5	à 133	ò 149	Ñ 165	Á 181	┼ 197	ı 213	Õ 229	§ 245
6	å 134	û 150	ª 166	Â 182	ã 198	Í 214	µ 230	÷ 246
7	ç 135	ù 151	º 167	À 183	Ã 199	Î 215	þ 231	¸ 247
8	ê 136	ÿ 152	¿ 168	© 184	╚ 200	Ï 216	Þ 232	° 248
9	ë 137	Ö 153	® 169	╣ 185	╔ 201	┘ 217	Ú 233	¨ 249
A	è 138	Ü 154	¬ 170	║ 186	╩ 202	┌ 218	Û 234	· 250
B	ï 139	ø 155	½ 171	╗ 187	╦ 203	█ 219	Ù 235	¹ 251
C	î 140	£ 156	¼ 172	╝ 188	╠ 204	▄ 220	ý 236	³ 252
D	ì 141	Ø 157	¡ 173	¢ 189	═ 205	¦ 221	Ý 237	² 253
E	Ä 142	× 158	« 174	¥ 190	╬ 206	Ì 222	¯ 238	■ 254
F	Å 143	ƒ 159	» 175	┐ 191	¤ 207	▀ 223	´ 239	SP 255

3.2.5 Page 3 [PC860: Portuguese]

HEX	8	9	A	B	C	D	E	F
0	Ç 128	É 144	á 160	░ 176	└ 192	╨ 208	α 224	≡ 240
1	ü 129	À 145	í 161	▒ 177	┴ 193	╤ 209	β 225	± 241
2	é 130	È 146	ó 162	▓ 178	┬ 194	╥ 210	Γ 226	≥ 242
3	â 131	ô 147	ú 163	│ 179	├ 195	╙ 211	π 227	≤ 243
4	ã 132	õ 148	ñ 164	┤ 180	─ 196	╘ 212	Σ 228	⌠ 244
5	à 133	ò 149	Ñ 165	╡ 181	┼ 197	╒ 213	σ 229	⌡ 245
6	Á 134	Ú 150	ª 166	╢ 182	╞ 198	╓ 214	µ 230	÷ 246
7	ç 135	ù 151	º 167	╖ 183	╟ 199	╫ 215	τ 231	≈ 247
8	ê 136	Ì 152	¿ 168	╕ 184	╚ 200	╪ 216	Φ 232	° 248
9	Ê 137	Õ 153	Ò 169	╣ 185	╔ 201	┘ 217	Θ 233	• 249
A	è 138	Ü 154	¬ 170	║ 186	╩ 202	┌ 218	Ω 234	· 250
B	Í 139	¢ 155	½ 171	╗ 187	╦ 203	█ 219	δ 235	√ 251
C	Ô 140	£ 156	¼ 172	╝ 188	╠ 204	▄ 220	∞ 236	ⁿ 252
D	ì 141	Ù 157	¡ 173	╜ 189	═ 205	▌ 221	Φ 237	² 253
E	Ã 142	Pt 158	« 174	╛ 190	╬ 206	▐ 222	ε 238	■ 254
F	Â 143	Ó 159	» 175	┐ 191	╧ 207	▀ 223	∩ 239	SP 255

3.2.6 Page 4 [PC863: Canadian-French]

HEX	8	9	A	B	C	D	E	F
0	Ç 128	É 144	¦ 160	░ 176	└ 192	╨ 208	α 224	≡ 240
1	ü 129	È 145	´ 161	▒ 177	┴ 193	╤ 209	β 225	± 241
2	é 130	Ê 146	ó 162	▓ 178	┬ 194	╥ 210	Γ 226	≥ 242
3	â 131	ô 147	ú 163	│ 179	├ 195	╙ 211	π 227	≤ 243
4	Â 132	Ë 148	¨ 164	┤ 180	─ 196	╘ 212	Σ 228	⌠ 244
5	à 133	Ï 149	¸ 165	╡ 181	┼ 197	╒ 213	σ 229	⌡ 245
6	¶ 134	û 150	³ 166	╢ 182	╞ 198	╓ 214	µ 230	÷ 246
7	ç 135	ù 151	¯ 167	╖ 183	╟ 199	╫ 215	τ 231	≈ 247
8	ê 136	¤ 152	Î 168	╕ 184	╚ 200	╪ 216	Φ 232	° 248
9	ë 137	Ô 153	⌐ 169	╣ 185	╔ 201	┘ 217	Θ 233	• 249
A	è 138	Ü 154	¬ 170	║ 186	╩ 202	┌ 218	Ω 234	· 250
B	ï 139	¢ 155	½ 171	╗ 187	╦ 203	█ 219	δ 235	√ 251
C	î 140	£ 156	¼ 172	╝ 188	╠ 204	▄ 220	∞ 236	ⁿ 252
D	‗ 141	Ù 157	¾ 173	╜ 189	═ 205	▌ 221	φ 237	² 253
E	À 142	Û 158	« 174	╛ 190	╬ 206	▐ 222	ε 238	■ 254
F	§ 143	ƒ 159	» 175	┐ 191	╧ 207	▀ 223	∩ 239	SP 255

3.2.7 Page 5 [PC865: Nordic]

HEX	8	9	A	B	C	D	E	F
0	Ç 128	É 144	á 160	░ 176	└ 192	╨ 208	α 224	≡ 240
1	ü 129	æ 145	í 161	▒ 177	┴ 193	╤ 209	β 225	± 241
2	é 130	Æ 146	ó 162	▓ 178	┬ 194	╥ 210	Γ 226	≥ 242
3	â 131	ô 147	ú 163	│ 179	├ 195	╙ 211	π 227	≤ 243
4	ä 132	ö 148	ñ 164	┤ 180	─ 196	╘ 212	Σ 228	⌠ 244
5	à 133	ò 149	Ñ 165	╡ 181	┼ 197	╒ 213	σ 229	⌡ 245
6	å 134	û 150	ª 166	╢ 182	╞ 198	╓ 214	µ 230	÷ 246
7	ç 135	ù 151	º 167	╖ 183	╟ 199	╫ 215	τ 231	≈ 247
8	ê 136	ÿ 152	¿ 168	╕ 184	╚ 200	╪ 216	Φ 232	° 248
9	ë 137	Ö 153	⌐ 169	╣ 185	╔ 201	┘ 217	Θ 233	• 249
A	è 138	Ü 154	¬ 170	║ 186	╩ 202	┌ 218	Ω 234	· 250
B	ï 139	ø 155	½ 171	╗ 187	╦ 203	█ 219	δ 235	√ 251
C	î 140	£ 156	¼ 172	╝ 188	╠ 204	▄ 220	∞ 236	ⁿ 252
D	ì 141	Ø 157	¡ 173	╜ 189	═ 205	▌ 221	Φ 237	² 253
E	Ä 142	Pt 158	« 174	╛ 190	╬ 206	▐ 222	ε 238	■ 254
F	Å 143	ƒ 159	¤ 175	┐ 191	╧ 207	▀ 223	∩ 239	SP 255

3.2.8 Page 16 [WPC1252]

HEX	8	9	A	B	C	D	E	F
0	€ 128	SP 144	SP 160	° 176	À 192	Ð 208	à 224	ð 240
1	SP 129	‘ 145	¡ 161	± 177	Á 193	Ñ 209	á 225	ñ 241
2	‚ 130	’ 146	¢ 162	² 178	Â 194	Ò 210	â 226	ò 242
3	ƒ 131	“ 147	£ 163	³ 179	Ã 195	Ó 211	ã 227	ó 243
4	„ 132	” 148	¤ 164	´ 180	Ä 196	Ô 212	ä 228	ô 244
5	… 133	• 149	¥ 165	µ 181	Å 197	Õ 213	å 229	õ 245
6	† 134	– 150	¦ 166	¶ 182	Æ 198	Ö 214	æ 230	ö 246
7	‡ 135	— 151	§ 167	· 183	Ç 199	× 215	ç 231	÷ 247
8	ˆ 136	˜ 152	¨ 168	¸ 184	È 200	Ø 216	è 232	ø 248
9	‰ 137	™ 153	© 169	¹ 185	É 201	Ù 217	é 233	ù 249
A	Š 138	š 154	ª 170	º 186	Ê 202	Ú 218	ê 234	ú 250
B	‹ 139	› 155	« 171	» 187	Ë 203	Û 219	ë 235	û 251
C	Œ 140	œ 156	¬ 172	¼ 188	Ì 204	Ü 220	ì 236	ü 252
D	SP 141	SP 157	- 173	½ 189	Í 205	Ý 221	í 237	ý 253
E	Ž 142	ž 158	® 174	¾ 190	Î 206	Þ 222	î 238	þ 254
F	SP 143	Ÿ 159	¯ 175	¿ 191	Ï 207	ß 223	ï 239	ÿ 255

3.2.9 Page 17 [PC866: Cyrillic #2]

HEX	8	9	A	B	C	D	E	F
0	А 128	Р 144	а 160	░ 176	└ 192	╨ 208	р 224	Ё 240
1	Б 129	С 145	б 161	▒ 177	┴ 193	╤ 209	с 225	ё 241
2	В 130	Т 146	в 162	▓ 178	┬ 194	╥ 210	т 226	Є 242
3	Г 131	У 147	г 163	│ 179	├ 195	╙ 211	у 227	є 243
4	Д 132	Ф 148	д 164	┤ 180	─ 196	╘ 212	ф 228	Ї 244
5	Е 133	Х 149	е 165	╡ 181	┼ 197	╒ 213	х 229	ї 245
6	Ж 134	Ц 150	ж 166	╢ 182	╞ 198	╓ 214	ц 230	Ў 246
7	З 135	Ч 151	з 167	╖ 183	╟ 199	╫ 215	ч 231	ў 247
8	И 136	Ш 152	и 168	╕ 184	╚ 200	╪ 216	ш 232	° 248
9	Й 137	Щ 153	й 169	╣ 185	╔ 201	┘ 217	щ 233	• 249
A	К 138	Ъ 154	к 170	║ 186	╩ 202	┌ 218	ъ 234	· 250
B	Л 139	Ы 155	л 171	╗ 187	╦ 203	█ 219	ы 235	√ 251
C	М 140	Ь 156	м 172	╝ 188	╠ 204	▄ 220	ь 236	№ 252
D	Н 141	Э 157	н 173	╜ 189	═ 205	▌ 221	э 237	¤ 253
E	О 142	Ю 158	о 174	╛ 190	╬ 206	▐ 222	ю 238	■ 254
F	П 143	Я 159	п 175	┐ 191	╧ 207	▀ 223	я 239	SP 255

3.2.10 Page 18 [PC852: Latin2]

HEX	8	9	A	B	C	D	E	F
0	Ç 128	É 144	á 160	░ 176	└ 192	đ 208	Ó 224	- 240
1	ü 129	Ĺ 145	í 161	▒ 177	┴ 193	Đ 209	β 225	˝ 241
2	é 130	Í 146	ó 162	▓ 178	┬ 194	Ď 210	Ô 226	˛ 242
3	â 131	ô 147	ú 163	│ 179	├ 195	Ë 211	Ń 227	ˇ 243
4	ä 132	ö 148	Ą 164	┤ 180	─ 196	ď 212	ń 228	˘ 244
5	ů 133	Ľ 149	ą 165	Á 181	┼ 197	Ň 213	ň 229	§ 245
6	ć 134	ľ 150	Ž 166	Â 182	Ă 198	Í 214	Š 230	÷ 246
7	ç 135	Ś 151	ž 167	Ě 183	ă 199	Î 215	š 231	¸ 247
8	ł 136	ś 152	Ę 168	Ş 184	╚ 200	ě 216	Ŕ 232	° 248
9	ë 137	Ö 153	ę 169	╣ 185	╔ 201	┘ 217	Ú 233	¨ 249
A	Ő 138	Ü 154	SP 170	║ 186	╩ 202	┌ 218	ŕ 234	• 250
B	ő 139	Ť 155	ź 171	╗ 187	╦ 203	█ 219	Ű 235	ű 251
C	î 140	ť 156	Č 172	╝ 188	╠ 204	▄ 220	ý 236	Ř 252
D	Ź 141	Ł 157	ş 173	Ż 189	═ 205	Ţ 221	Ý 237	ř 253
E	Ä 142	× 158	« 174	ż 190	╬ 206	Ů 222	ţ 238	■ 254
F	Ć 143	č 159	» 175	┐ 191	¤ 207	▀ 223	´ 239	SP 255

3.2.11 Page 19 [PC858: Euro]

HEX	8	9	A	B	C	D	E	F
0	Ç 128	É 144	á 160	░ 176	└ 192	ð 208	Ó 224	– 240
1	ü 129	æ 145	í 161	▒ 177	┴ 193	Ð 209	β 225	± 241
2	é 130	Æ 146	ó 162	▓ 178	┬ 194	Ê 210	Ô 226	‗ 242
3	â 131	ô 147	ú 163	│ 179	├ 195	Ë 211	Ò 227	¾ 243
4	ä 132	ö 148	ñ 164	┤ 180	─ 196	È 212	õ 228	¶ 244
5	à 133	ò 149	Ñ 165	Á 181	┼ 197	€ 213	Õ 229	§ 245
6	å 134	û 150	ª 166	Â 182	ã 198	Í 214	µ 230	÷ 246
7	ç 135	ù 151	º 167	À 183	Ã 199	Î 215	þ 231	¸ 247
8	ê 136	ÿ 152	¿ 168	© 184	╚ 200	Ï 216	Þ 232	° 248
9	ë 137	Ö 153	® 169	╣ 185	╔ 201	┘ 217	Ú 233	¨ 249
A	è 138	Ü 154	¬ 170	║ 186	╩ 202	┌ 218	Û 234	· 250
B	ï 139	ø 155	½ 171	╗ 187	╦ 203	█ 219	Ù 235	¹ 251
C	î 140	£ 156	¼ 172	╝ 188	╠ 204	▄ 220	ý 236	³ 252
D	ì 141	Ø 157	¡ 173	¢ 174	═ 205	¦ 221	Ý 237	² 253
E	Ä 142	× 158	« 174	¥ 190	╬ 206	Ì 222	¯ 238	■ 254
F	Å 143	ƒ 159	» 175	┐ 191	¤ 207	▀ 223	´ 239	SP 255

3.2.12 Page 255 [User-defined page]

HEX	8	9	A	B	C	D	E	F
0	SP 128	SP 144	SP 160	SP 176	SP 192	SP 208	SP 224	SP 240
1	SP 129	SP 145	SP 161	SP 177	SP 193	SP 209	SP 225	SP 241
2	SP 130	SP 146	SP 162	SP 178	SP 194	SP 210	SP 226	SP 242
3	SP 131	SP 147	SP 163	SP 179	SP 195	SP 211	SP 227	SP 243
4	SP 132	SP 148	SP 164	SP 180	SP 196	SP 212	SP 228	SP 244
5	SP 133	SP 149	SP 165	SP 181	SP 197	SP 213	SP 229	SP 245
6	SP 134	SP 150	SP 166	SP 182	SP 198	SP 214	SP 230	SP 246
7	SP 135	SP 151	SP 167	SP 183	SP 199	SP 215	SP 231	SP 247
8	SP 136	SP 152	SP 168	SP 184	SP 200	SP 216	SP 232	SP 248
9	SP 137	SP 153	SP 169	SP 185	SP 201	SP 217	SP 233	SP 249
A	SP 138	SP 154	SP 170	SP 186	SP 202	SP 218	SP 234	SP 250
B	SP 139	SP 155	SP 171	SP 187	SP 203	SP 219	SP 235	SP 251
C	SP 140	SP 156	SP 172	SP 188	SP 204	SP 220	SP 236	SP 252
D	SP 141	SP 157	SP 173	SP 189	SP 205	SP 221	SP 237	SP 253
E	SP 142	SP 158	SP 174	SP 190	SP 206	SP 222	SP 238	SP 254
F	SP 143	SP 159	SP 175	SP 191	SP 207	SP 223	SP 239	SP 255

3.2.13 International Character Sets

Country	ASCII code (Hex)											
	23	24	40	5B	5C	5D	5E	60	7B	7C	7D	7E
USA	#	$	@	[	\	]	^	`	{	|	}	~
France	#	$	à	°	ç	§	^	`	é	ù	è	¨
Germany	#	$	§	Ä	Ö	Ü	^	`	ä	ö	ü	β
U.K.	£	$	@	[	\	]	^	`	{	|	}	~
Denmark I	#	$	@	Æ	Ø	Å	^	`	æ	ø	å	~
Sweden	#	¤	É	Ä	Ö	Å	Ü	é	ä	ö	å	ü
Italy	#	$	@	°	\	é	^	ù	à	ò	è	ì
Spain I	Pt	$	@	¡	Ñ	¿	^	`	¨	ñ	}	~
Japan	#	$	@	[	¥	]	^	`	{	|	}	~
Norway	#	¤	É	Æ	Ø	Å	Ü	é	æ	ø	å	ü
Denmark II	#	$	É	Æ	Ø	Å	Ü	é	æ	ø	å	ü
Spain II	#	$	á	¡	Ñ	¿	é	`	í	ñ	ó	ú
Latin America	#	$	á	¡	Ñ	¿	é	ü	í	ñ	ó	ú
Korea	#	$	@	[	₩	]	^	`	{	|	}	~
Slovenia/ Croatia	#	$	Ž	Š	Đ	Ć	Č	ž	š	đ	ć	č
China	#	¥	@	[	\	]	^	`	{	|	}	~

3.3 Switches and Buttons

3.3.1 Power Button

The POWER button (a rocker switch) located on the lower right front of the printer turns the power on or off.

NOTES:
1. Turn on the power only after connecting the power supply.
2. To turn the power on immediately after turning off the power, press the POWER button after the LED lights go off.
3. If the power is turned off without the execution of the **DLE DC4** (*fn* = 2) command, the values of the maintenance counter are not updated correctly. To use the maintenance counter correctly, see APPENDIX G.

3.3.2 Panel Buttons

1) FEED button: Non-locking push button

[Function]
- Feeds paper based on the line spacing set by **ESC 2** and **ESC 3**. However, paper feeding using the FEED button cannot be performed under the following conditions:
  1) When the roll paper end sensor has detected a paper end
  2) When the roll paper cover is open
- If you push this button when the printer is in the macro execution standby state, the defined macro is executed.
- During self-test printing, you can stop the self test temporarily by pressing this button and restart it by pressing the button again.

NOTE: Enabling/disabling of this button can be selected by **ESC c 5**. If the command is set to disable the button, this button is unable to function.

3.3.3 DIP Switches

3.3.3.1 Serial interface specifications

1) DIP switch 1: 8 switches

Table 3.3.1 DIP Switch 1

SW 1	Function	ON	OFF	Factory setting
1	Data reception error	Ignored	Prints '?'	OFF
2	Receive buffer capacity	45 bytes	4K bytes	OFF
3	Handshaking	XON/XOFF	DTR/DSR	OFF
4	Word length	7 bits	8 bits	OFF
5	Parity check	Yes	No	OFF
6	Selection of parity	Even	Odd	OFF
7	Selection of transmission speed	See Table 3.3.2.		ON
8				OFF

Table 3.3.2 Transmission Speed

Transmission Speed (bps)	SW 1-7	SW 1-8
38400 (*1)	ON	ON
4800	OFF	ON
9600	ON	OFF
19200	OFF	OFF

bps: bits per second

NOTES:
1. The default value of the transmission speed is 9600 bps.
2. *1:The transmission speed depends on the setting of the transmission condition of the serial interface. 2400, 4800, 9600, 19200, 38400, 57600, and 115200 are available as setting values. The factory setting is 38400.
3. The setting of the communication condition of the serial interface is performed with **GS (E**. As for each setting value, see **GS (E** for details.
4. The communication condition of the serial interface set by **GS (E** is enabled only when DIP switches 1-7 and 1-8 are on. For other settings, the setting values by DIP switch 1 are enabled.

2) DIP switch 2: 8 switches

Table 3.3.3 DIP Switch 2

SW 2	Function	ON	OFF	Factory setting
1	Handshaking (Condition for BUSY)	• Receive buffer full	• Offline • Receive buffer full	OFF
2	Reserved (Do not change settings)	Fixed to OFF		OFF
3	Selects print density / Low power consumption mode (*1)	See Table 3.3.4.		OFF
4				OFF
5	Setting the conditions that cancels the receive buffer BUSY state (this function is effective when the receive buffer capacity is set to 4 KB.)	Cancels the BUSY state when the remaining capacity of the receive buffer reaches 138 bytes.	Cancels the BUSY state when the remaining capacity of the receive buffer reaches 256 bytes.	OFF
6	Reserved (Do not change settings.)	Fixed to Off.		OFF
7	I/F pin 6 reset signal	Enabled	Disabled	OFF
8	I/F pin 25 reset signal	Enabled	Disabled	OFF

NOTE: (*1) The default settings may be different depending on the models.

Table 3.3.4 DIP Switch 2-3 and 2-4

Switch No.		Function
3	4	
OFF	OFF	Print density (Standard)
ON	OFF	Print density (Medium)
OFF	ON	Print density (Dark)
ON	ON	Low power consumption mode

NOTES:
1. Change the DIP switch when the printer power is turned off.
2. Changes in DIP switch settings are recognized only when the printer power is turned on or when the printer is reset by using the interface. Even if the DIP switch setting is changed after the printer power is turned on, the change does not take effect until the printer is turned on again or is reset.
3. If the print density is set to “medium”/”dark” level, printing speed tends to slow down.
4. The Japanese model does not support the low power consumption mode.

3.3.3.2 Parallel interface specification

Table 3.3.5 DIP Switch 1

SW	Function	ON	OFF	Factory setting
1	Auto line feed	Always enabled	Always disabled	OFF
2	Receive buffer capacity	45 bytes	4 KB	OFF
3	Selects paper sensors to output paper-end signals (default value of **ESC c 3**)	Disabled	Roll paper end sensor enabled, Roll paper near-end sensor enabled	OFF
4	Sets error signal	Disabled	Enabled	OFF
5-8	Undefined	–	–	OFF

Table 3.3.6 DIP Switch 2

SW	Function	ON	OFF	Factory setting
1	Handshaking (Condition for BUSY)	• Receive buffer full	• Offline • Receive buffer full	OFF
2	Reserved (Do not change settings)	Fixed to Off		OFF
3	Selects print density / Low power consumption mode (*1)	See Table 3.3.7.		OFF
4				OFF
5	Setting the conditions that cancel the receive buffer BUSY state (This function is effective when the capacity of the receive buffer is set to 4 KB.)	Cancels the BUSY state when the remaining capacity of the receive buffer reaches 138 bytes.	Cancels the BUSY state when the remaining capacity of the receive buffer reaches 256 bytes.	OFF
6	Reserved (Do not change settings)	Fixed to Off		OFF
7	Reserved (Do not change settings)	Fixed to Off		OFF
8	I/F pin 31 reset signal (Do not change settings)	Fixed to On		ON

NOTE: (*1) The default settings may be different depending on the model.

Table 3.3.7 DIP Switch 2-3 and 2-4

3	4	Function
OFF	OFF	Print density (Standard)
ON	OFF	Print density (Medium)
OFF	ON	Print density (Dark)
ON	ON	Low power consumption mode

NOTES:
1. Change the DIP switch settings when the printer power is turned off.
2. Changes in DIP switch settings are recognized only when the printer power is turned on or when the printer is reset by using the interface. Even if the DIP switch settings are changed after the printer power is turned on, the changes do not take effect until the printer is turned on again or is reset.
3. If the print density is set to “medium”/”dark” level, printing speed is inclined to slow down.
4. The Japanese model does not support the low power consumption mode.

3.3.3.3 USB interface specification

Table 3.3.8 DIP Switch 1

SW	Function	ON	OFF	Factory setting
1	Auto line feed	Always enabled	Always disabled	OFF
2	Receive buffer capacity	45 bytes	4 KB	OFF
3	Undefined	–	–	OFF
4	Undefined	–	–	OFF
5	Undefined	–	–	OFF
6	Undefined	–	–	OFF
7	Undefined	–	–	OFF
8	Sets USB power-saving function. *1	Disabled	Enabled	OFF

NOTE: *1 Setting of USB power-saving function is enabled only when using U05 or U19.

Table 3.3.9 DIP Switch 2

SW	Function	ON	OFF	Factory setting
1	Handshaking (BUSY condition)	• Receive buffer full	• Offline • Receive buffer full	OFF
2	Reserved (Do not change settings)	Fixed to Off.		OFF
3	Selects print density / Low power consumption mode (*1)	See Table 3.3.10.		OFF
4				OFF
5	Settings of the conditions that cancel the receive buffer BUSY state (This function is effective when the capacity of the receive buffer is set to 4 KB.)	Cancels the BUSY state when the remaining capacity of the receive buffer reaches 138 bytes.	Cancels the BUSY state when the remaining capacity of the receive buffer reaches 256 bytes.	OFF
6	Reserved (Do not change settings)	Fixed to Off.		OFF
7	Reserved (Do not change settings)	Fixed to Off.		OFF
8	Reserved (Do not change settings)	Fixed to On.		ON

NOTE: (*1) The default settings may be different depending on the model.

Table 3.3.10 DIP Switch 2-3 and 2-4

3	4	Function
OFF	OFF	Print density (Standard)
ON	OFF	Print density (Medium)
OFF	ON	Print density (Dark)
ON	ON	Low power consumption mode

NOTES:
1. Change the DIP switch when the printer power is turned off.
2. Changes in DIP switch settings are recognized only when the printer power is turned on or when the printer is reset by using the interface. Even if the DIP switch settings are changed after the printer power is turned on, the changes do not take effect until the printer is turned on again or is reset.
3. If the print density is set to “medium”/”dark” level, printing speed is inclined to slow down.
4. The Japanese model does not support the low power consumption mode.

3.3.4 Customized value

The customized value is set with the **GS (E** command.
See **GS (E** for details.

Table 3.3.11 Types of the Customized Value

Function	Value
Selection of print density	13 levels in the print density level 1 to 13
Selection of print speed	Level 1–9 (9 levels)
Number of head energization	One-part energization, two-part energization, four-part energization, or auto energization
Selection of print control	Single-color control / Two-color control
Selection of black-color density in two-color printing	Light / Standard

NOTES:
1. The selection of the number of head energization is effective only when "single-color print control is selected. When automatic control is selected, usual data is printed with one-part energization and a high duty data may temporarily printed with two-part energization.
2. When “two-color print control” is selected, the thermal head energization setting is fixed to “two-part energization”.
3. Print speed is controlled depending on the number of the head energization. The maximum print speed (200 mm/s {7.87"/s}) can be performed only when one-part energization or auto-energization is selected.
4. In the low power consumption mode, all settings are ignored.
5. The Japanese model does not support the two-color printing mode.

3.4 Panel LED Indicators

1) Power LED: Green

On: Power is stable.

Off: Power is not stable.

2) Error (ERROR) LED: Red

On: Offline (except while paper is being fed using the FEED button and during test printing, and the error state). (See Section 2.1.1 2.) Switching between online and offline.)

Off: Normal condition

Flashing: Error (See Section 3.8.)

3) Roll paper end (PAPER OUT) LED: Red

On: The roll paper near end is detected.

Off: Paper is loaded (Normal condition)

Flashing:
- Self-test standby state (See Section 3.5.3.) or macro standby state
- Macro execution standby state when the macro execution command is used.

Table 3.4.1 Standby State Indication

State	PAPER LED Flashing Pattern	Recovery Conditions
Waiting for self-test printing to be continued or macro execution ready state.	PAPER OUT 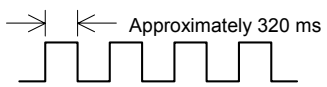	Pressing the FEED button causes self-test printing to be continued or executes the macro.

NOTE: A macro can be executed *r* times (*r* specifies the number of times to execute the macro.) within the specified definition range. The macro can be executed continuously or can be executed by pressing the FEED button. If the macro is executed by pressing the FEED button, the PAPER OUT LED flashes to indicate the macro execution ready state. (See Section 6, Commands.)

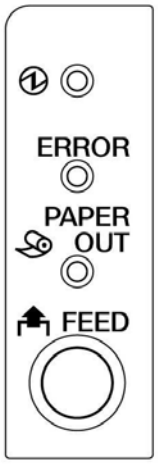

Figure 3.4.1 Panel Switches and Indicators

3.5 Self-test

1) The printer has a self-test function that checks the following:
   - Control circuit functions
   - Printer mechanisms
   - Print quality
   - Control software version
   - DIP switch settings

2) Starting the self-test

   To start the self-test on the roll paper, hold down the FEED button while turning on the printer with the cover closed, then the current printer status (*1) is printed.

   (*1)
   - Control software version
   - DIP switch settings

3) Self-test standby state

   After printing the current printer status, the printer prints the message "If you want to continue SELF-TEST printing, please press FEED button." The PAPER OUT LED indicator flashes and the printer enters the test printing (*2) standby state. Press the FEED button to start test printing.

   (*2)
   - A rolling pattern using only the built-in character set
   - A partial cut after completing the test printing

4) Ending the self-test and operation after the test

   After a number of lines are printed, the printer indicates the end of the self-test by printing "*** completed ***".

3.6 Hexadecimal Dumping

1) Hexadecimal dumping function

This function prints the data transmitted from the host computer in hexadecimal numbers and in its corresponding characters.

2) Running hexadecimal dumping

1. Start hexadecimal dumping by executing either of the following:
   a. Open the cover and turn the power on while pressing the FEED button, and then close the roll paper cover.
   b. Execute the **GS (A** command.
2. The printer first prints "Hexadecimal Dump To terminate ….." on roll paper, and then prints the received print data in hexadecimal numbers and in its corresponding characters.
3. After printing has finished, Hexadecimal dumping ends by executing any of the following:
   a. Turn the power off.
   b. Press the FEED button three times.
   c. Reset the printer.

NOTES:
1. If no characters correspond to the data received, the printer prints ".".
2. During hexadecimal dumping, any commands other than **DLE EOT** do not function.
3. Insufficient print data to fill the last line can be printed by pressing down the FEED button.

<Printing example>

```
Hexadecimal Dump
To terminate hexadecimal dump,
press FEED button three times.




1B 21 00 1B 26 02 40 40 1B 69        . ! . . & . @@ . i
1B 25 01 1B 63 34 00 1B 30 31        . % . . c 4 . . 0 1
41 42 43 44 45 46 47 48 49 4A       A B C D E F G H I J

                    *** completed ***
```

3.7 NV Graphics Print Mode

1) NV graphics print function

This function prints the NV graphics that are registered in the printer. The printer prints:

- Capacity of the NV graphics
- Occupied capacity of the NV graphics
- Unused capacity of the NV graphics
- Number of the NV graphics that are registered
- Key code, number of dots in X direction, number of dots in Y direction, number of colors to be defined
- NV graphics data

2) Mode start

(1) Open the roll paper cover and turn the power on while pressing the paper FEED button; then press the paper FEED button once and close the roll paper cover.

(2) The instructions for printing the NV graphics are printed. Open the roll paper cover, press the paper FEED button once, and close the roll paper cover.

3) Mode end

Turn the power off.

3.8 Error Processing

3.8.1 Error types

1) Errors that automatically recover

Table 3.8.1 Errors That Automatically Recover

Error	Description	ERROR LED Flashing Pattern Approx. 160 ms	Recovery
Print head temperature error	The temperature of the print head is extremely high.	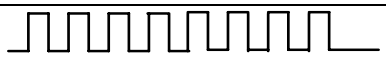	Recovers automatically when the print head cools.
Roll paper cover open error	Printing on the roll paper is not performed correctly due to a cover-open.		Recovers automatically when the cover is closed.

NOTE: Print head temperature error is not an abnormality.

2) Recoverable errors

Table 3.8.2 Recoverable Errors

Error	Description	ERROR LED Flashing Pattern 160 ms	Recovery
Autocutter error	The autocutter does not work correctly.	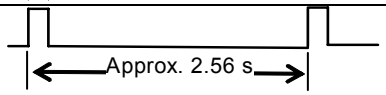	Recovers by **DLE ENQ 1** or **DLE ENQ 2**.

3) Unrecoverable errors

Table 3.8.3 Unrecoverable Errors

Error	Description	ERROR LED Flashing Pattern ≥ 160 ms	Recovery
R/W error in memory	After R/W checking, the printer does not work correctly.		Impossible to recover.
High voltage error	The power supply voltage is extremely high.		Impossible to recover.
Low voltage error	The power supply voltage is extremely low.		Impossible to recover.
CPU execution error	The CPU executes an incorrect address.		Impossible to recover.
UIB error	An abnormal operation occurs in UIB.		Impossible to recover.
Internal circuit connection error	Internal circuits are not connected correctly.	Approx. 2.56 s	Impossible to recover.

NOTE: When any error shown above occurs, turn off the power as soon as possible.

3.8.2 Printer operation when an error has occurred

The printer executes the following operations when detecting an error.

- Stops all printer operations for the selected paper section.
- Goes offline.
- Goes BUSY. (See Section 3.3.3 DIP switches when DIP switch 2-1 is off.)
- Flashes the ERROR LED.

3.8.3 Data receive error (only with the serial interface medel)

If one of the following errors occurs during serial interface communication, the printer prints "?" or ignores the data, depending on the setting of DIP switch 1-1.

- Parity error
- Framing error
- Overrun error

3.9 Cover Open Button

When the cover open button (located to the right of the cover) is pressed, the roll paper cover opens.

NOTES: 1. Be sure to use the cover open button to open the roll paper cover.
2. Do not open the cover during printing.
3. Do not open the cover during auto-cutting operation; otherwise the mechanism may be damaged.

3.10 Cover Open Sensor

The cover open sensor monitors the roll paper cover. When the sensor detects a cover open during printing, the error LED flashes and the printer stops printing. The printer recovers when the cover is closed. When the sensor detects a cover open while the printer is in the standby status, the printer goes offline. The printer recovers when the cover is closed.

NOTE: The status reported by the paper sensors remains the same as that reported immediately before the cover was opened.

3.11 Print Buffer-full Printing

<When in standard mode>
When subsequent data is received after the printer processes one line of data in the print buffer, the printer automatically prints the processed line and feeds the paper by one line.

<When in page mode>
When subsequent data is received after the printer processes one line of data in the print buffer, the printer automatically moves the printing position to one line below the processed line.

3.12 Buzzer (for the model with an internal buzzer)

The buzzer beeps by a pulse signal with the **ESC p** or **DLE DC4** commands.

NOTE: Since the buzzer drive signal and the cash drawer drive signal are common in the printer, do not use the same connector pin number to output the signal for the buzzer and the cash drawer.

The connector pin number to output the buzzer drive signal is specified by the DIP switches.

Table 3.12.1 DIP Switch

SW No.	Connector pin to be specified	ON	OFF	Default
1	Drawer kick-out connector pin 5	Beeps	Does not beep	ON
2	Drawer kick-out connector pin 2	Beeps	Does not beep	OFF

4. CASE SPECIFICATIONS

4.1 External Dimensions and Mass

Height:	Approximately 148 mm {5.83"}
Width:	Approximately 145 mm {5.71"}
Depth:	Approximately 195 mm {7.68"}
Mass:	Approximately 1.8 kg {3.96 lb} (except for a roll paper)

4.2 Color

EPSON standard color (ECW, EDG)

4.3 External Appearance

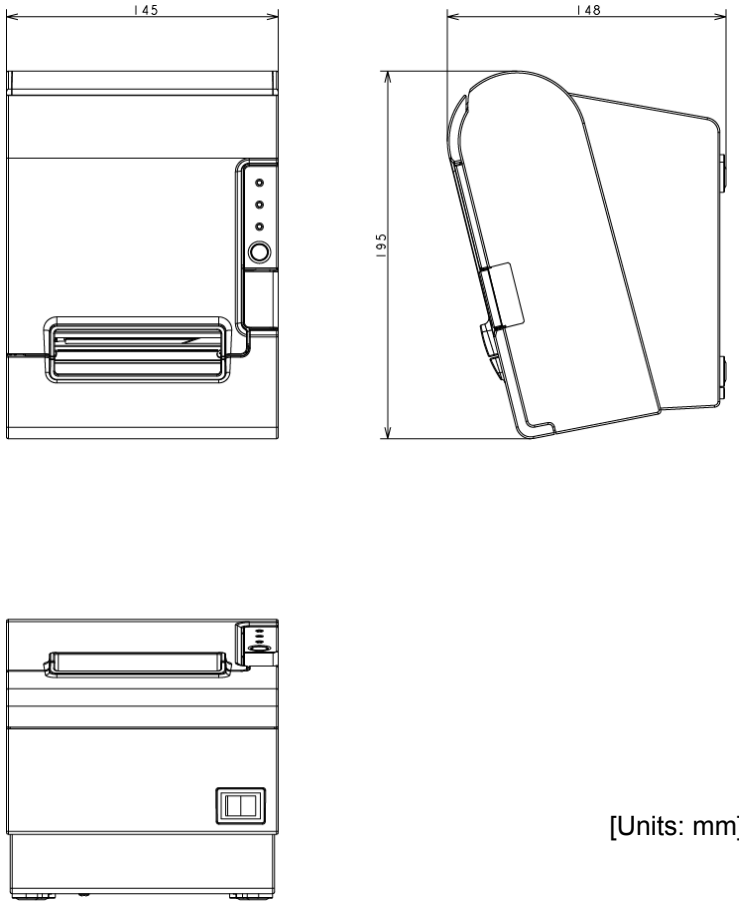

[Units: mm]

Materials for the external: 94V-0

Figure 4.3.1 External Appearance

5. OPTIONS AND CONSUMABLES

5.1 Standard Accessories

- Roll paper × 1 roll
- User's Manual (Languages: English, German, French, Spanish, Portuguese, Italian, Dutch, Simplified Chinese, Traditional Chinese, Japanese)
- Power switch cover
- External power supply (for the model with the power supply unit)
  Model: PS-180
- Connector cover

5.2 Options

- Affixing tapes
  Model: DF-10
- Wall hanging bracket
  Model: WH-10
- External power supply
  Model: PS-180
- Power supply box
  Model: OT-BX88
  NOTE: The power supply that can be stored in this box is only the PS-180.
- Various interface boards (UB series)

NOTE: The UB-E02A and UB-R02A cannot be used.

5.3 Consumables

- Specified paper

Thermal roll paper: NTP080-80 (for 80 mm paper width model)
NTP058-80 (for 58 mm paper width model)
[Original paper: TF50KS-E Nippon Paper Industries Co., Ltd.]

In Japan: Nakagawa Manufacturing Co., Ltd.
In U.S.A.: Nakagawa Mfg. (USA) Inc.
In Europe: Nakagawa Mfg. (Europe) GmbH
In Southeast Asia: N.A.K. Mfg. (Malaysia) SDN BHD

The following paper can be used instead of the specified paper above:

Original paper: PD190R (Oji Paper Mfg. Co., Ltd.)
P350(F380), P310, P300 Kanzaki Specialty Papers, Inc. (U.S.A.)
AF50KS-E Jujo Thermal Oy (Finland)

NOTE: Do not use any paper other than these specified above. Otherwise, print head reliability and print quality are affected adversely.

6. COMMANDS

6.1 Command Notation

XXXX

[Name]	The name of the command.
[Format]	The code sequence. *[ ]k* indicates the contents in brackets [ ] should be repeated *k* times.
[Range]	Gives the allowable ranges, if any, for the command parameters.
[Default]	Gives the default values, if any, for the arguments.
[Description]	Describes the function of the command. "–" in the table indicates 0 or 1.
[Notes]	Provides important information on setting and using the printer command, if necessary.
[Reference]	Gives references, if any.

6.2 Explanation of Terms

1) Real-time command

Real-time commands are identified with a **DLE** extension such as **DLE EOT**, **DLE ENQ,** or **DLE DC4**. The printer executes these commands as soon as they are received.

2) Obsolete command

Obsolete commands are commands that will not be supported by future printer models. Therefore, we recommend replacing them with more recent, upward-compatible commands that have the same functions.

3) NV memory write command

NV memory write commands delete or store data in the NV memory (flash ROM).

GS (E <some functions>, **GS (L** / **GS 8 L** <some functions>, **GS g 0**, **FS g 1**, **FS q**

4) ESC/POS Handshaking Protocol

ESC/POS Handshaking Protocol is a handshaking protocol between the host computer and the printer when the printer transmits data. The ESC/POS Handshaking Protocol is required if the following commands are executed:

GS (L / **GS 8 L** <some functions>

5) Print buffer

The print buffer is used to store image data for printing.

6) Receive buffer

The receive buffer is used to store data from the host computer. All received data is stored in this buffer and processed in the order received.

7) Maximum printable area

The maximum printable area of this printer is as follows:

- Standard Mode (Horizontal direction) : 72.25 mm {512/180"} [80 mm paper width model]
  : 50.80 mm {360/180"} [58 mm paper width model]
- Page Mode (Horizontal direction) : 72.25 mm {512/180"} [80 mm paper width model]
  : 50.80 mm {360/180"} [58 mm paper width model]
- Page Mode (Vertical direction) : 234.53 mm {3324/360"} [when single-color print control is selected]
  : 117.26 mm {1662/360"} [when two-color print control is selected]

8) Horizontal or vertical motion units

The horizontal or vertical motion units are used for calculating the setting values for various commands and can be changed with **GS P**.

9) Left edge of the print area

The left edge of the print area indicates the first column for character(s) to be developed, and also the print position to be moved when ($n_L + n_H \times 256$) = 0 is specified with **ESC $**.

- In standard mode, the left edge of the print area is the position of the left margin.
- In page mode, the left edge of the print area is the position of the left edge when the starting position specified with **ESC T** is viewed as the top left of the print area.

10) Column format / Raster format

Column format is a format where data is set in descending order (bit 7, 6, …, 0) from the top vertically.

d1	*d4*	*d7*	MSB LSB
d2	*d5*	*d8*	MSB LSB
d3	*d6*	*d9*	MSB LSB

Raster format is a format where data is set in descending order (bit 7, 6, …, 0) from the left horizontally.

d1	*d2*	*d3*
d4	*d5*	*d6*
d7	*d8*	*d9*
MSB LSB	MSB LSB	MSB LSB

11) Inch

A unit of length. One inch is 25.4 mm.

12) dpi

dpi (dots per inch) is the number of dots per 25.4 mm.

6.3 Control Commands

HT

[Name] Horizontal tab

[Format] ASCII HT
Hex 09
Decimal 9

[Description] • Moves the print position to the next horizontal tab position.

LF

[Name] Print and line feed

[Format] ASCII LF
Hex 0A
Decimal 10

[Description] • Prints the data in the print buffer and feeds one line, based on the current line spacing.

FF (In page mode)

[Name] Print and return to standard mode (in page mode)

[Format] ASCII FF
Hex 0C
Decimal 12

[Description] • Prints all the data in the print buffer collectively and switches from page mode to standard mode.

CR

[Name] Print and carriage return

1.在串口下无效
2.自动走纸没开的情况下也无效
3.允许自动走纸情况下，命令有效，效果与***LF***一致

[Format] ASCII CR
Hex 0D
Decimal 13

[Description] • Executes one of the following operations.

Condition	Function
When automatic line feed is enabled.	Functions the same as **LF**.
When automatic line feed is disabled and when using the serial interface model.	This command is ignored.

CAN

[Name] Cancel print data in page mode

[Format]

ASCII	CAN
Hex	18
Decimal	24

[Description]
- In page mode, deletes all the print data in the current print area.

DLE EOT *n*

[Name] Transmit real-time status

[Format]

ASCII	DLE	EOT	*n*
Hex	10	04	*n*
Decimal	16	4	*n*

[Range] $1 \le n \le 4$

[Description]
- Transmits the real-time status.

n	Function
1	Transmits printer status.
2	Transmits offline cause status.
3	Transmits error cause status.
4	Transmits roll paper sensor status.

- This printer transmits the following status in real time.
  - Printer status (n = 1)

Bit	Off/On	Hex	Decimal	Status
0	Off	00	0	Fixed.
1	On	02	2	Fixed.
2	Off	00	0	Drawer kick-out connector pin 3 is LOW.
	On	04	4	Drawer kick-out connector pin 3 is HIGH.
3	Off	00	0	Online.
	On	08	8	Offline.
4	On	10	16	Fixed.
5, 6	--	--	--	Reserved.
7	Off	00	0	Fixed.

• Offline cause status (*n* = 2)

Bit	Off/On	Hex	Decimal	Status
0	Off	00	0	Fixed.
1	On	02	2	Fixed.
2	Off	00	0	Cover is closed.
	On	04	4	Cover is open.
3	Off	00	0	Paper is not being fed with the paper FEED button.
	On	08	8	Paper is being fed with the paper FEED button.
4	On	10	16	Fixed.
5	Off	00	0	No paper end stop.
	On	20	32	Printing stopped due to paper end.
6	Off	00	0	No error.
	On	40	64	Error occurred.
7	Off	00	0	Fixed.

• Error cause status (*n* = 3)

Bit	Off/On	Hex	Decimal	Status
0	Off	00	0	Fixed.
1	On	02	2	Fixed.
2	--	--	--	Reserved.
3	Off	00	0	No autocutter error.
	On	08	8	Autocutter error occurred.
4	On	10	16	Fixed.
5	Off	00	0	No unrecoverable error.
	On	20	32	Unrecoverable error occurred.
6	Off	00	0	No automatically recoverable error.
	On	40	64	Automatically recoverable error occurred.
7	Off	00	0	Fixed.

• Roll paper sensor status (*n* = 4)

Bit	Off/On	Hex	Decimal	Status
0	Off	00	0	Fixed.
1	On	02	2	Fixed.
2, 3	Off	00	0	Roll paper near-end sensor: paper adequate.
	On	0C	12	Roll paper near-end sensor: paper near end.
4	On	10	16	Fixed.
5, 6	Off	00	0	Roll paper end sensor (paper sensor): paper present.
	On	60	96	Roll paper end sensor (paper sensor): paper not present.
7	Off	00	0	Fixed.

Bits 5 and 6: While the cover is open, this shows the state when the cover was still closed.

[Notes]
- Take the following into consideration:
  - If the received data includes a data string matching this command, the printer performs this command. Users must consider this.
    Example: Graphic data might accidentally include a data string matching this command.
  - Do not embed this command within another command.
    Example: Graphic data might include this command.
- Transmit this command using the following method:
  - When this command is transmitted, the subsequent data must not be transmitted until the status is received.
  - However, if this command must be transmitted continuously, it is possible to transmit up to 4 commands at once.
    In this case, the subsequent data must not be transmitted until the all status is received.
    If this command is transmitted without using the above method, the status may not be received.

DLE ENQ *n*

[Name] Send real-time request to printer

[Format]

ASCII	DLE	ENQ	*n*
Hex	10	05	*n*
Decimal	16	5	*n*

[Range] *n* = 1, 2

[Description]
- Responds to a request in real-time from the host computer.

n	Function
1	Recovers from a recoverable error and restarts printing from the line where the error occurred. • This command is ignored unless a recoverable error has occurred.
2	Recovers from a recoverable error after clearing the receive and print buffers. • This command is ignored unless a recoverable error has occurred.

[Notes]
- Use this command after removing the cause of the error.
- Take the following into consideration:
  - If the received data includes a data string matching this command, the printer performs the command. Users must consider this.
    Example: Graphic data might accidentally include a data string matching this command.
  - Do not embed this command within another command.
    Example: Graphic data might include this command.

[Reference] APPENDIX C

DLE DC4 *fn m t* (*fn* = 1)

[Name] Generate pulse in real-time

[Format]

ASCII	DLE	DC4	*fn*	*m*	*t*
Hex	10	14	*fn*	*m*	*t*
Decimal	16	20	*fn*	*m*	*t*

[Range]
fn = 1
m = 0, 1
$1 \le t \le 8$

[Description]
- Outputs the pulse specified by *t* in real-time to connector pin *m*.

m	Connector pin
0	Drawer kick-out connector pin 2.
1	Drawer kick-out connector pin 5.

- *t* specifies the pulse on time or off time as [$t \times 100$ ms].

[Notes]
- Take the following into consideration:
  - If the received data includes a data string with this command, the printer performs the command. Users must consider this.
    Example: Graphic data might accidentally include a data string matching this command.
  - Do not embed this command within another command.
    Example: Graphic data might include this command.

[Reference] APPENDIX F, "3.12 Buzzer (for the model with an internal buzzer)"

DLE DC4 *fn a b* (*fn* = 2)

[Name] Execute power-off sequence

[Format]

ASCII	DLE	DC4	*fn*	*a*	*b*
Hex	10	14	*fn*	*a*	*b*
Decimal	16	20	*fn*	*a*	*b*

[Range]
fn = 2
a = 1
b = 8

[Description]
- Executes the printer power-off sequence and transmits the power-off notice.
  - Stores the values of the maintenance counter.
  - Sets the interface to BUSY.
  - Sets the printer to standby mode.

[Notes]
- Take the following into consideration:
  - If the received data includes a data string matching this command, the printer performs the command. Users must consider this.
    Example: Graphic data might accidentally include a data string matching this command.
  - Do not embed this command within another command.
    Example: Graphic data might include this command.
- This command does not shut the power off. The operator must turn the power off after receiving the power-off notice.
- If this command is executed, the printer will not continue to process anything. To recover the printer to print again, it is necessary to turn the power on again or execute a hardware reset.

[Reference] APPENDIX G

DLE DC4 *fn d1…d7* (*fn* = 8)

[Name] Clear buffer(s)

[Format]

ASCII	DLE	DC4	*fn*	*d1…d7*
Hex	10	14	*fn*	*d1…d7*
Decimal	16	20	*fn*	*d1…d7*

[Range] *fn* = 8
d1 = 1, *d2* = 3, *d3* = 20, *d4* = 1, *d5* = 6, *d6* = 2, *d7* = 8

[Description]
- Clears all data stored in the receive buffer and the print buffer and transmits Clear response.
- If a recoverable error occurs, recovers from the error.

[Notes]
- Do not use this command in a system that uses the printer with the OPOS driver or the JavaPOS driver provided by Seiko Epson Corporation.
- Take the following into consideration:
  - If the received data includes a data string matching this command, the printer performs the command. Users must consider this.
    Example: Graphic data might accidentally include a data string matching this command.
  - Do not embed this command within another command.
    Example: Graphic data might include this command.
- Do not transmit the subsequent data until the status is received after transmitting this command.

ESC FF

[Name] Print data in page mode

[Format]

ASCII	ESC	FF
Hex	1B	0C
Decimal	27	12

[Description]
- In page mode, prints all the data in the print buffer collectively.

ESC SP *n*

[Name] Set right-side character spacing

[Format]

ASCII	ESC	SP	*n*
Hex	1B	20	*n*
Decimal	27	32	*n*

[Range] $0 \le n \le 255$

[Default] $n = 0$

[Description]
- Sets the right-side character spacing to [$n \times$ (horizontal or vertical motion unit)].

[Note]
- The maximum right-side spacing is 35.98 mm {255/180"}.

ESC ! *n*

[Name] Select print mode(s)

[Format]

ASCII	ESC	!	*n*
Hex	1B	21	*n*
Decimal	27	33	*n*

[Range] $0 \le n \le 255$

[Default] $n = 0$

[Description]
- Selects the character font and styles (emphasized, double-height, double-width, and underlined) together.

(*n*) Bit	Off/On	Hex	Decimal	Function
0	Off	00	0	Character font A (12 × 24) selected.
	On	01	1	Character font B (9 × 17) selected.
1, 2	Off	00	0	Reserved.
3	Off	00	0	Emphasized mode is turned off.
	On	08	8	Emphasized mode is turned on.
4	Off	00	0	Double-height canceled.
	On	10	16	Double-height selected.
5	Off	00	0	Double-width canceled.
	On	20	32	Double-width selected.
6	Off	00	0	Reserved.
7	Off	00	0	Underline mode is turned off.
	On	80	128	Underline mode is turned on.

ESC $ *nL nH*

[Name] Set absolute print position

[Format]

ASCII	ESC	$	*nL*	*nH*
Hex	1B	24	*nL*	*nH*
Decimal	27	36	*nL*	*nH*

[Range] $0 \le (n_L + n_H \times 256) \le 65535$ $(0 \le n_L \le 255,\ 0 \le n_H \le 255)$

[Description]
- Moves the print position to $[(n_L + n_H \times 256) \times$ (horizontal or vertical motion unit)] from the left edge of the print area.

ESC % *n*

[Name] Select/cancel user-defined character set

[Format]

ASCII	ESC	%	*n*
Hex	1B	25	*n*
Decimal	27	37	*n*

[Range] $0 \le n \le 255$

[Default] $n = 0$

[Description]
- Selects or cancels the user-defined character set.
  - When the LSB of *n* is 0, the user-defined character set is canceled.
  - When the LSB of *n* is 1, the user-defined character set is selected.

ESC & *y c1 c2 [x1 d1...d(y×x1)]...[xk d1...d(y×xk)]*

[Name] Define user-defined characters

[Format]

ASCII	ESC	&	*y*	*c1*	*c2*	*[x1*	*d1...d(y×x1)]...[xk*	*d1...d(y×xk)]*
Hex	1B	26	*y*	*c1*	*c2*	*[x1*	*d1...d(y×x1)]...[xk*	*d1...d(y×xk)]*
Decimal	27	38	*y*	*c1*	*c2*	*[x1*	*d1...d(y×x1)]...[xk*	*d1...d(y×xk)]*

[Range]
$y = 3$
$32 \le c1 \le c2 \le 126$
$0 \le x \le 12$ [when Font A (12 × 24) is selected]
$0 \le x \le 9$ [when Font B (9 × 17) is selected]
$0 \le d \le 255$
$k = c2 - c1 + 1$

[Description]
- Defines the user-defined character pattern for the specified character codes.
  - *y* specifies the number of bytes in the vertical direction.
  - *c1* specifies the beginning character code for the definition, and *c2* specifies the final code.
  - *x* specifies the number of dots in the horizontal direction from the left edge.
  - *d* specifies the defined data (column format).

[Note]
- User-defined characters and a downloaded bit image (**GS ∗**) cannot be defined simultaneously. When this command is executed, the downloaded bit image is deleted.

ESC ∗ *m nL nH d1...dk*

[Name] Select bit-image mode

[Format]

ASCII	ESC	∗	*m*	n_L	n_H	*d1...dk*
Hex	1B	2A	*m*	n_L	n_H	*d1...dk*
Decimal	27	42	*m*	n_L	n_H	*d1...dk*

[Range]
$m = 0, 1, 32, 33$
$1 \le (n_L + n_H \times 256) \le 2047$ $(0 \le n_L \le 255, 0 \le n_H \le 7)$
$0 \le d \le 255$
$k = n_L + n_H \times 256$ [when $m = 0, 1$]
$k = (n_L + n_H \times 256) \times 3$ [when $m = 32, 33$]

[Description]
- Stores the bit image data in the print buffer using the bit image mode specified by *m*.

m	Bit image mode	Vertical direction	Horizontal direction
0	8-dot single-density	60 dpi	90 dpi
1	8-dot double-density	60 dpi	180 dpi
32	24-dot single-density	180 dpi	90 dpi
33	24-dot double-density	180 dpi	180 dpi

  - n_L, n_H specify the number of dots of the image data in the horizontal direction as ($n_L + n_H \times 256$).
  - *d* specifies the bit image data (column format).

ESC – *n*

[Name] Turn underline mode on/off

[Format]

ASCII	ESC	–	*n*
Hex	1B	2D	*n*
Decimal	27	45	*n*

[Range] $0 \le n \le 2$, $48 \le n \le 50$

[Default] $n = 0$

[Description] • Turns underline mode on or off.

n	Function
0, 48	Turns off underline mode.
1, 49	Turns on underline mode, set at 1-dot width.
2, 50	Turns on underline mode, set at 2-dot width.

ESC 2

[Name] Select default line spacing

[Format]

ASCII	ESC	2
Hex	1B	32
Decimal	27	50

[Description] • Sets the line spacing to approximately 4.23 mm {1/6"}.

ESC 3 *n*

[Name] Set line spacing

[Format]

ASCII	ESC	3	*n*
Hex	1B	33	*n*
Decimal	27	51	*n*

[Range] $0 \le n \le 255$

[Default] Equivalent to approximately 4.23 mm {1/6"}.

[Description] • Sets the line spacing to [$n \times$ (vertical or horizontal motion unit)].

[Note] • The maximum is 1016 mm {40"}.

ESC = *n*

[Name] Select peripheral device

[Format]

ASCII	ESC	=	*n*
Hex	1B	3D	*n*
Decimal	27	61	*n*

[Range] $0 \le n \le 255$

[Default] $n = 1$

[Description]
- Selects the device to which the host computer transmits data.

n	Function
1, 3	Enables printer.
2	Disables printer.

- When the printer is disabled ($n = 2$), all data except this command and the real-time commands are ignored.

ESC ? *n*

[Name] Cancel user-defined characters

[Format]

ASCII	ESC	?	*n*
Hex	1B	3F	*n*
Decimal	27	63	*n*

[Range] $32 \le n \le 126$

[Description]
- Deletes the user-defined character pattern specified by character code *n*.

ESC @

[Name] Initialize printer

[Format]

ASCII	ESC	@
Hex	1B	40
Decimal	27	64

[Description]
- Clears the data in the print buffer and resets the printer modes to the modes that were in effect when the power was turned on.
  Keeps the following data:
  - Macro definition data.
  - Contents stored in the NV user memory.
  - Contents defined for the NV graphics (NV bit image).
  - Maintenance counter value.
  - Setting value specified with **GS (E**.

ESC D *n1...nk NUL*

[Name] Set horizontal tab positions

[Format]

ASCII	ESC	D	*n1...nk*	*NUL*
Hex	1B	44	*n1...nk*	*00*
Decimal	27	68	*n1...nk*	*0*

[Range] $1 \le n1 \le n2 \le ... \le nk \le 255$
$0 \le k \le 32$

[Default] n = 8, 16, 24, 32, 40, ..., 232, 240, 248
[for Font A (12 × 24) in a standard character size width]

[Description]
- Sets horizontal tab positions.
  - *n* specifies the number of digits from the setting position to the left edge of the print area.
  - *k* is used to indicate the number of bytes set for the horizontal tab position.

ESC E *n*

[Name] Turn emphasized mode on/off

[Format]

ASCII	ESC	E	*n*
Hex	1B	45	*n*
Decimal	27	69	*n*

[Range] $0 \le n \le 255$

[Default] $n = 0$

[Description]
- Turns emphasized mode on or off.
  - When the LSB of *n* is 0, turns off emphasized mode.
  - When the LSB of *n* is 1, turns on emphasized mode.

ESC G *n*

[Name] Turn double-strike mode on/off

[Format]

ASCII	ESC	G	*n*
Hex	1B	47	*n*
Decimal	27	71	*n*

[Range] $0 \le n \le 255$

[Default] $n = 0$

[Description]
- Turns double-strike mode on or off.
  - When the LSB of *n* is 0, turns off double-strike mode.
  - When the LSB of *n* is 1, turns on double-strike mode.

ESC J *n*

[Name] Print and feed paper

[Format]

ASCII	ESC	J	*n*
Hex	1B	4A	*n*
Decimal	27	74	*n*

[Range] $0 \leq n \leq 255$

[Description]
- Prints the data in the print buffer and feeds the paper [$n \times$ (vertical or horizontal motion unit)].

[Note]
- The maximum paper feed amount is 1016 mm {40"}.

ESC L

[Name] Select page mode

[Format]

ASCII	ESC	L
Hex	1B	4C
Decimal	27	76

[Description]
- Switches from standard mode to page mode.

ESC M *n*

[Name] Select character font

[Format]

ASCII	ESC	M	*n*
Hex	1B	4D	*n*
Decimal	27	77	*n*

[Range] *n* = 0, 1, 48, 49

[Default] *n* = 0

[Description]
- Selects a character font.

n	Character font
0, 48	Character font A (12 × 24)
1, 49	Character font B (9 × 17)

ESC R *n*

[Name] Select an international character set

[Format]

ASCII	ESC	R	*n*
Hex	1B	52	*n*
Decimal	27	82	*n*

[Range] $0 \le n \le 15$

[Default] $n = 0$ [Other than the following models]
$n = 15$ [Simplified Chinese model]

[Description] • Selects an international character set.

n	International character set
0	U.S.A.
1	France
2	Germany
3	U.K.
4	Denmark I
5	Sweden
6	Italy
7	Spain I
8	Japan
9	Norway
10	Denmark II
11	Spain II
12	Latin America
13	Korea
14	Slovenia / Croatia
15	China

[Reference] "3.2.13 International Character Sets"

ESC S

[Name] Select standard mode

[Format]

ASCII	ESC	S
Hex	1B	53
Decimal	27	83

[Description] • Switches from page mode to standard mode.

ESC T *n*

[Name] Select print direction in page mode

[Format]

ASCII	ESC	T	*n*
Hex	1B	54	*n*
Decimal	27	84	*n*

[Range] $0 \le n \le 3$, $48 \le n \le 51$

[Default] $n = 0$

[Description] • In page mode, selects the print direction and starting position.

n	Print direction	Starting position
0, 48	Left to right	Upper left
1, 49	Bottom to top	Lower left
2, 50	Right to left	Lower right
3, 51	Top to bottom	Upper right

ESC V *n*

[Name] Turn 90° clockwise rotation mode on/off

[Format]

ASCII	ESC	V	*n*
Hex	1B	56	*n*
Decimal	27	86	*n*

[Range] $0 \le n \le 2$, $48 \le n \le 50$

[Default] $n = 0$

[Description] • In standard mode, turns 90° clockwise rotation mode on or off for characters.

n	Function
0, 48	Turns off 90° clockwise rotation mode.
1, 49 2, 50	Turns on 90° clockwise rotation mode.

ESC W x_L x_H y_L y_H dx_L dx_H dy_L dy_H

[Name] Set print area in page mode

[Format]

ASCII	ESC	W	x_L	x_H	y_L	y_H	dx_L	dx_H	dy_L	dy_H
Hex	1B	57	x_L	x_H	y_L	y_H	dx_L	dx_H	dy_L	dy_H
Decimal	27	87	x_L	x_H	y_L	y_H	dx_L	dx_H	dy_L	dy_H

[Range]
$0 \le (x_L + x_H \times 256) \le 65535$ $(0 \le x_L \le 255, 0 \le x_H \le 255)$
$0 \le (y_L + y_H \times 256) \le 65535$ $(0 \le y_L \le 255, 0 \le y_H \le 255)$
$1 \le (dx_L + dx_H \times 256) \le 65535$ $(0 \le dx_L \le 255, 0 \le dx_H \le 255)$
$1 \le (dy_L + dy_H \times 256) \le 65535$ $(0 \le dy_L \le 255, 0 \le dy_H \le 255)$

[Default]
$(x_L + x_H \times 256) = 0$ $(x_L = 0, x_H = 0)$
$(y_L + y_H \times 256) = 0$ $(y_L = 0, y_H = 0)$
$(dx_L + dx_H \times 256) = 512$ $(dx_L = 0, dx_H = 2)$ [80 mm paper width model]
$(dx_L + dx_H \times 256) = 360$ $(dx_L = 104, dx_H = 4)$ [58 mm paper width model]
$(dy_L + dy_H \times 256) = 1662$ $(dy_L = 126, dy_H = 6)$

[Description]
- In page mode, sets the size and the logical origin of the print area.
  - x_L, x_H specify the horizontal logical origin as $[(x_L + x_H \times 256) \times$ (horizontal motion unit)] from absolute origin.
  - y_L, y_H specify the vertical logical origin as $[(y_L + y_H \times 256) \times$ (vertical motion unit)] from absolute origin.
  - dx_L, dx_H specify the horizontal dimension of print area as $[(dx_L + dx_H \times 256) \times$ (horizontal motion unit)].
  - dy_L, dy_H specify the vertical dimension of print area as $[(dy_L + dy_H \times 256) \times$ (vertical motion unit)].

[Note]
- When single-color print control is selected, the vertical dimension of the print area can be set to 234.53 mm {3324/360"} maximum.
  When two-color print control is selected, the vertical dimension of the print area can be set to 117.26 mm {1662/360"} maximum.

ESC \ n_L n_H

[Name] Set relative print position

[Format]

ASCII	ESC	\	n_L	n_H
Hex	1B	5C	n_L	n_H
Decimal	27	92	n_L	n_H

[Range] $-32768 \le (n_L + n_H \times 256) \le 32767$

[Description]
- Moves the print position to $[(n_L + n_H \times 256) \times$ (horizontal or vertical motion unit)] from the current position.
  - A positive number specifies movement to the right, and a negative number specifies movement to the left.

ESC a *n*

[Name] Select justification 对齐方式

[Format]

ASCII	ESC	a	*n*
Hex	1B	61	*n*
Decimal	27	97	*n*

[Range] $0 \le n \le 2$, $48 \le n \le 50$

[Default] $n = 0$

[Description] • In standard mode, aligns all the data in one line to the selected layout.

n	Justification
0, 48	Left justification
1, 49	Centering
2, 50	Right justification

ESC c 3 *n*

[Name] Select paper sensor(s) to output paper-end signals

[Format]

ASCII	ESC	c	3	*n*
Hex	1B	63	33	*n*
Decimal	27	99	51	*n*

[Range] $0 \le n \le 255$

[Default] $n = 0$ [when DIP switch [SW 1-3] is on.]
$n = 15$ [when DIP switch [SW 1-3] is off.]

[Description] • Selects wether the paper sensor(s) to output paper end signals or not when a paper end is detected.

(*n*) Bit	Off/On	Hex	Decimal	Function
0	Off	00	0	Disables roll paper near-end sensor.
	On	01	1	Enables roll paper near-end sensor.
1	Off	00	0	Disables roll paper near-end sensor.
	On	02	2	Enables roll paper near-end sensor.
2	Off	00	0	Disables roll paper end sensor (paper sensor).
	On	04	4	Enables roll paper end sensor (paper sensor).
3	Off	00	0	Disables roll paper end sensor (paper sensor).
	On	08	8	Enables roll paper end sensor (paper sensor).
4 - 7	Off	00	0	Reserved.

[Note] • This command is enabled only with a parallel interface model.

ESC c 4 *n*

[Name] Select paper sensor(s) to stop printing

[Format]

ASCII	ESC	c	4	*n*
Hex	1B	63	34	*n*
Decimal	27	99	52	*n*

[Range] $0 \le n \le 255$

[Default] $n = 0$

[Description]
- Selects the paper sensor(s) whether to use to stop printing or not when a paper end is detected.

(*n*) Bit	Off/On	Hex	Decimal	Function
0	Off	00	0	Roll paper near-end sensor disabled.
	On	01	1	Roll paper near-end sensor enabled.
1	Off	00	0	Roll paper near-end sensor disabled.
	On	02	2	Roll paper near-end sensor enabled.
2 - 7	Off	00	0	Reserved.

ESC c 5 *n*

[Name] Enable/disable panel buttons

[Format]

ASCII	ESC	c	5	*n*
Hex	1B	63	35	*n*
Decimal	27	99	53	*n*

[Range] $0 \le n \le 255$

[Default] $n = 0$

[Description]
- Enables or disables the panel buttons.
  - When the LSB of *n* is 0, the panel buttons are enabled.
  - When the LSB of *n* is 1, the panel buttons are disabled.

[Notes]
- This command affects the FEED button.
- The FEED button is disabled regardless of the settings with this command, when the cover is open.

ESC d *n*

[Name] Print and feed *n* lines

[Format]

ASCII	ESC	d	*n*
Hex	1B	64	*n*
Decimal	27	100	*n*

[Range] $0 \le n \le 255$

[Description]
- Prints the data in the print buffer and feeds the paper [$n \times$ (current line spacing)].

[Note]
- The maximum paper feed amount is 1016 mm {40"}.

ESC p *m t1 t2*

[Name] Generate pulse

[Format]

ASCII	ESC	p	*m*	*t1*	*t2*
Hex	1B	70	*m*	*t1*	*t2*
Decimal	27	112	*m*	*t1*	*t2*

[Range] $m = 0, 1, 48, 49$
$0 \le t1 \le 255$
$0 \le t2 \le 255$

[Description]
- Outputs the pulse specified by *t1* and *t2* to connector pin *m*.

m	Connector pin
0, 48	Drawer kick-out connector pin 2.
1, 49	Drawer kick-out connector pin 5.

- *t1* specifies the pulse on time as [$t1 \times 2$ ms].
- *t2* specifies the pulse off time as [$t2 \times 2$ ms].

[Note]
- Specify a value ($t1 < t2$) so that the off time is longer than the on time.

ESC t *n*

[Name] Select character code table

[Format]

ASCII	ESC	t	*n*
Hex	1B	74	*n*
Decimal	27	116	*n*

[Range] $0 \le n \le 5$, $16 \le n \le 19$, $n = 255$

[Default] $n = 0$

[Description]
- Selects page *n* from the character code table.

n	Character code table
0	Page 0 [PC437 (USA: Standard Europe)]
1	Page 1 [Katakana]
2	Page 2 [PC850 (Multilingual)]
3	Page 3 [PC860 (Portuguese)]
4	Page 4 [PC863 (Canadian-French)
5	Page 5 [PC865 (Nordic)]
16	Page 16 [WPC1252]
17	Page 17 [PC866 (Cyrillic #2)]
18	Page 18 [PC852 (Latin 2)]
19	Page 19 [PC858 (Euro)]
255	Page 255 [User-defined page]

[Reference] "3.2 Character Code Tables"

ESC { *n*

[Name] Turn upside-down print mode on/off

[Format]

ASCII	ESC	{	*n*
Hex	1B	7B	*n*
Decimal	27	123	*n*

[Range] $0 \le n \le 255$

[Default] $n = 0$

[Description]
- In standard mode, turns upside-down print mode on or off.
  - When the LSB of *n* is 0, turns off upside-down print mode.
  - When the LSB of *n* is 1, turns on upside-down print mode.

FS g 1 *m a1 a2 a3 a4 nL nH d1...dk* [obsolete command]

[Name] Write to NV user memory

[Format]

ASCII	FS	g	1	*m*	*a1*	*a2*	*a3*	*a4*	n_L	n_H	*d1...dk*
Hex	1C	67	31	*m*	*a1*	*a2*	*a3*	*a4*	n_L	n_H	*d1...dk*
Decimal	28	103	49	*m*	*a1*	*a2*	*a3*	*a4*	n_L	n_H	*d1...dk*

[Range] $m = 0$

$0 \le (a1 + a2 \times 256 + a3 \times 65536 + a4 \times 16777216) \le 1023$

$(0 \le a1 \le 255,\ 0 \le a2 \le 3,\ a3 = 0,\ a4 = 0)$

$1 \le (n_L + n_H \times 256) \le 1024 \quad (0 \le n_L \le 255,\ 0 \le n_H \le 4)$

$32 \le d \le 255$

$k = (n_L + n_H \times 256)$

The entire capacity size = 1KB.

[Description]
- Stores the data (*d1...dk*) in the area from ($a1 + a2 \times 256 + a3 \times 65536 + a4 \times 16777216$) to ($n_L + n_H \times 256$) bytes in the NV user memory.

[Notes]
- Frequent write command executions by an NV memory write command may damage the NV memory. Therefore, it is recommended to limit writing the commands into the NV memory to less than 10 times a day.
- If the power is turned off or the printer is reset via an interface while this command is being executed, the printer may go into an abnormal condition. Be careful not to turn the power off or let the printer be reset via an interface while this command is being executed.
- While processing this command, the printer may become BUSY while writing the data to the NV memory and stops receiving data. Therefore, be sure not to transmit data, including the real-time commands while the printer is BUSY.

FS g 2 *m a1 a2 a3 a4 nL nH* [obsolete command]

[Name] Read from NV user memory

[Format]

ASCII	FS	g	2	*m*	*a1*	*a2*	*a3*	*a4*	n_L	n_H
Hex	1C	67	32	*m*	*a1*	*a2*	*a3*	*a4*	n_L	n_H
Decimal	28	103	50	*m*	*a1*	*a2*	*a3*	*a4*	n_L	n_H

[Range] $m = 0$

$0 \le (a1 + a2 \times 256 + a3 \times 65536 + a4 \times 16777216) \le 1023$

$(0 \le a1 \le 255,\ 0 \le a2 \le 3,\ a3 = 0,\ a4 = 0)$

$1 \le (n_L + n_H \times 256) \le 80 \quad (1 \le n_L \le 80,\ n_H = 0)$

[Description]
- Transmits the data in the area from $(a1 + a2 \times 256 + a3 \times 65536 + a4 \times 16777216)$ to $(n_L + n_H \times 256)$ bytes in the NV user memory.

[Note]
- When this command is transmitted, do not transmit the subsequent data until the status is received.

GS ! *n*

[Name] Select character size

[Format]

ASCII	GS	!	*n*
Hex	1D	21	*n*
Decimal	29	33	*n*

[Range] $0 \le n \le 7,\ 16 \le n \le 23,\ 32 \le n \le 39,\ 48 \le n \le 55,\ 64 \le n \le 71,$
$80 \le n \le 87,\ 96 \le n \le 103,\ 112 \le n \le 119$
(1 ≤ Enlargement in vertical direction ≤ 8, 1 ≤ Enlargement in horizontal direction ≤ 8)

[Default] $n = 0$

[Description]
- Selects character size (height magnification and width magnification).

(*n*) Bit	Off/On	Hex	Decimal	Function
0 - 2	See table [Height magnification].			Selects the height magnification.
3	Off	00	0	Reserved.
4 - 6	See table [Width magnification].			Selects the width magnification.
7	Off	00	0	Reserved.

[Height magnification]

Hex	Decimal	Enlargement
00	0	1 time (standard)
01	1	2 times
02	2	3 times
03	3	4 times
04	4	5 times
05	5	6 times
06	6	7 times
07	7	8 times

[Width magnification]

Hex	Decimal	Enlargement
00	0	1 time (standard)
10	16	2 times
20	32	3 times
30	48	4 times
40	64	5 times
50	80	6 times
60	96	7 times
70	112	8 times

GS $ n_L n_H

[Name] Set absolute vertical print position in page mode

[Format]

ASCII	GS	$	n_L	n_H
Hex	1D	24	n_L	n_H
Decimal	29	36	n_L	n_H

[Range] $0 \le (n_L + n_H \times 256) \le 65535$ $(0 \le n_L \le 255, 0 \le n_H \le 255)$

[Description]
- In page mode, moves the vertical print position to $[(n_L + n_H \times 256) \times$ (vertical or horizontal motion unit)] from the starting position set with **ESC T**.

GS (A p_L p_H n m

[Name] Execute test print

[Format]

ASCII	GS	(	A	p_L	p_H	n	m
Hex	1D	28	41	p_L	p_H	n	m
Decimal	29	40	65	p_L	p_H	n	m

[Range] $(p_L + p_H \times 256) = 2$ $(p_L = 2, p_H = 0)$
$0 \le n \le 2, 48 \le n \le 50$
$1 \le m \le 3, 49 \le m \le 51$

[Description]
- Executes a specified test print.
  - p_L, p_H specify $(p_L + p_H \times 256)$ as the number of bytes after p_H (n and m).
  - n specifies the paper used for the test print.

n	Paper source
0, 48	Basic sheet (roll paper)
1, 49 2, 50	Roll paper

  - m specifies a test pattern.

m	Test pattern
1, 49	Hexadecimal dump print
2, 50	Printer status print
3, 51	Rolling pattern print

[Notes]
- The printer executes a software reset after processing this command.
  - Clears the receive and print buffers.
  - Resets all setting values in RAM (the print area, the character styles, and others) that were in effect at power on. (The data in the NV memory is not reset.)

GS (D *pL pH m [a1 b1]...[ak bk]*

[Name] Enable/disable real-time command

[Format]

ASCII	GS	(	D	*pL*	*pH*	*m*	*[a1*	*b1]...[ak*	*bk]*
Hex	1D	28	44	*pL*	*pH*	*m*	*[a1*	*b1]...[ak*	*bk]*
Decimal	29	40	68	*pL*	*pH*	*m*	*[a1*	*b1]...[ak*	*bk]*

[Range] $3 \le (p_L + p_H \times 256) \le 65535$ $(0 \le p_L \le 255,\ 0 \le p_H \le 255)$
$m = 20$
$a = 1, 2$
$b = 0, 1, 48, 49$

[Default] $b = 1$ [when $a = 1$]
$b = 0$ [when $a = 2$]

[Description]
- Enables or disables the real-time command specified by *a*.
- p_L, p_H specify ($p_L + p_H \times 256$) as the number of bytes after p_H (*m* and *[a1 b1]...[ak bk]*).

a	*b*	Function
1	0, 48	**DLE DC4 *fn m t*** (*fn* = 1): Not processed (disabled).
	1, 49	**DLE DC4 *fn m t*** (*fn* = 1): Processed (enabled).
2	0, 48	**DLE DC4 *fn a b*** (*fn* = 2): Not processed (disabled).
	1, 49	**DLE DC4 *fn a b*** (*fn* = 2): Processed (enabled).

[Note]
- If graphics data includes a data string matching **DLE DC4** (*fn* = 1 or 2), it is recommended to use this command in advance to disable the real-time commands.

GS (E *pL pH fn [parameters]*

[Name] Set user setup commands

[Description]
- Controls the user setting modes.
  - *pL*, *pH* specify (*pL* + *pH* ×256) as the number of bytes after *pH* (*fn* and *[parameters]*).
  - *fn* specifies the function.
  - *[parameters]* specify the process of each function.

fn	Format	Function No.	Function name
1	**GS (E *pL pH fn d1 d2***	1	Change into the user setting mode.
2	**GS (E *pL pH fn d1 d2 d3***	2	End the user setting mode session.
5	**GS (E *pL pH fn*** **[*a1 n1L n1H*] ... [*ak nkL nkH*]**	5	Set the customized setting values.
6	**GS (E *pL pH fn a***	6	Transmit the customized setting values.
11	**GS (E *pL pH fn a d1...dk***	11	Set the configuration item for the serial interface.
12	**GS (E *pL pH fn a***	12	Transmit the configuration item for the serial interface.

[Notes]
- Frequent write command executions by an NV memory write command may damage the NV memory. Therefore, it is recommended to limit writing the commands into the NV memory to less than 10 times a day.
- If the power is turned off or the printer is reset via an interface while this command is being executed, the printer may go into an abnormal condition. Be careful not to turn the power off or let the printer be reset via an interface while this command is being executed.
- While processing this command, the printer is BUSY while writing the data to the NV memory and stops receiving data. Therefore, be sure not to transmit data, including the real-time commands, while the printer is BUSY.
- When <Function 1, 6, or 12> is transmitted, the data following must not be transmitted until the status is received.

<Function 1> **GS (E *pL pH fn d1 d2*** (*fn* = 1)

[Name] Change into the user setting mode

[Format]

ASCII	GS	(	E	*pL*	*pH*	*fn*	*d1*	*d2*
Hex	1D	28	45	*pL*	*pH*	*fn*	*d1*	*d2*
Decimal	29	40	69	*pL*	*pH*	*fn*	*d1*	*d2*

[Range] (*pL* + *pH* × 256) = 3 (*pL* = 3, *pH* = 0)
fn = 1
d1 = 73
d2 = 78

[Description]
- Enters the user setting mode and transmits a mode change notice.

<Function 2> **GS (E *pL pH fn d1 d2 d3*** (*fn* = 2)

[Name] End the user setting mode session

[Format]

ASCII	GS	(	E	p_L	p_H	*fn*	*d1*	*d2*	*d3*
Hex	1D	28	45	p_L	p_H	*fn*	*d1*	*d2*	*d3*
Decimal	29	40	69	p_L	p_H	*fn*	*d1*	*d2*	*d3*

[Range] $(p_L + p_H \times 256) = 4$ $(p_L = 4, p_H = 0)$
$fn = 2$
$d1 = 79$
$d2 = 85$
$d3 = 84$

[Description]
- Ends the user setting mode and performs a software reset.
- Clears the receive and print buffers.
- Resets all setting values in RAM (the print area, the character styles, and others) that were in effect at power on. (The data in the NV memory are not reset.)

<Function 5> **GS (E *pL pH fn [a1 n1L n1H]...[ak nkL nkH]*** (*fn* = 5)

[Name] Set the customized setting values

[Format]

ASCII	GS	(	E	p_L	p_H	*fn*	*[a1*	$n1_L$	$n1_H$*]* ...	*[ak*	nk_L	nk_H*]*
Hex	1D	28	45	p_L	p_H	*fn*	*[a1*	$n1_L$	$n1_H$*]* ...	*[ak*	nk_L	nk_H*]*
Decimal	29	40	69	p_L	p_H	*fn*	*[a1*	$n1_L$	$n1_H$*]* ...	*[ak*	nk_L	nk_H*]*

[Range] $4 \le (p_L + p_H \times 256) \le 65533$ $(0 \le p_L \le 255, 0 \le p_H \le 255)$
$fn = 5$
$a = 5, 6, 97, 116, 118$
$0 \le (n_L + n_H \times 256) \le 6$, $(n_L + n_H \times 256) = 100$, $65530 \le (n_L + n_H \times 256) \le 65535$
$(0 \le n_L \le 6, n_H = 0, n_L = 100, n_H = 0, 250 \le n_L \le 255, n_H = 255)$ [when $a = 5$]
$1 \le (n_L + n_H \times 256) \le 9$ $(1 \le n_L \le 9, n_H = 0)$ [when $a = 6$]
$(n_L + n_H \times 256) = 1, 2, 4, 128$ $(n_L = 1, 2, 4, 128, n_H = 0)$ [when $a = 97$]
$(n_L + n_H \times 256) = 1, 257$ $(n_L = 1, n_H = 0, 1)$ [when $a = 116$]
$(n_L + n_H \times 256) = 70, 85$ $(n_L = 70, 85, n_H = 0)$ [when $a = 118$]

[Default (upon shipment)]
$(n_L + n_H \times 256) = 100$ $(n_L = 100, n_H = 0)$ [when $a = 5$]
$(n_L + n_H \times 256) = 9$ $(n_L = 9, n_H = 0)$ [when $a = 6$]
$(n_L + n_H \times 256) = 128$ $(n_L = 128, n_H = 0)$ [when $a = 97$]
$(n_L + n_H \times 256) = 1$ $(n_L = 1, n_H = 0)$ [when $a = 116$]
$(n_L + n_H \times 256) = 85$ $(n_L = 85, n_H = 0)$ [when $a = 118$]

[Description]
- Sets the customized value specified by *a* to the values specified by $(n_L + n_H \times 256)$.

a	Type of customized value
5	Print density
6	Print speed
97	Number of division of thermal head energization
116	Print control (single-color or two-color)
118	Black-color density in two-color printing

• Print density setting (a = 5)

($n_L + n_H \times 256$)	Print density	
100	Density level depending on the DIP switch settings	
65530	Print density level 1.	light
65531	Print density level 2.	|
65532	Print density level 3.	|
65533	Print density level 4.	|
65534	Print density level 5.	|
65535	Print density level 6.	|
0	Print density level 7.	standard
1	Print density level 8.	|
2	Print density level 9.	|
3	Print density level 10.	|
4	Print density level 11.	|
5	Print density level 12.	|
6	Print density level 13.	dark

• Print speed setting (a = 6)

($n_L + n_H \times 256$)	Print speed	
1	Print speed level 1.	slow
2	Print speed level 2.	|
3	Print speed level 3.	|
4	Print speed level 4.	|
5	Print speed level 5.	|
6	Print speed level 6.	|
7	Print speed level 7.	|
8	Print speed level 8.	|
9	Print speed level 9.	fast

• Number of division of thermal head energization setting (a = 97)

($n_L + n_H \times 256$)	Number of division of thermal head energization
1	One-part energization.
2	Two-part energization.
4	Four-part energization.
128	Automatic control of thermal head energization.

- Print control (single-color or two-color) (a = 116)

($n_L + n_H \times 256$)	Print control
1	Single-color print control.
257	Two-color print control.

(*) When "two-color print control" is selected, the use of single-color thermal paper is prohibited.

- Black-color density in two-color printing setting (a = 118)

($n_L + n_H \times 256$)	Black-color density
70	Light
85	Standard

(*) The black-color density is affected only in two-color printing.

[Reference] 3.3.4 Customized value

<Function 6> **GS (E *pL pH fn a*** (fn = 6)

[Name] Transmit the customized setting values

[Format]

ASCII	GS	(	E	p_L	p_H	fn	a
Hex	1D	28	45	p_L	p_H	fn	a
Decimal	29	40	69	p_L	p_H	fn	a

[Range] ($p_L + p_H \times 256$) = 2 (p_L = 2, p_H = 0)
fn = 6
a = 5, 6, 97, 116, 118

[Description]
- Transmits the customized value specified by a.

a	Type of customized value
5	Print density
6	Print speed
97	Number of division of thermal head energization
116	Print control (single-color or two-color)
118	Black-color density in two-color printing

<Function 11> **GS (E *pL pH fn a d1...dk*** (*fn* = 11)

[Name] Set the configuration item for the serial interface

[Format]

ASCII	GS	(	E	*pL*	*pH*	*fn*	*a*	*d1 ... dk*
Hex	1D	28	45	*pL*	*pH*	*fn*	*a*	*d1 ... dk*
Decimal	29	40	69	*pL*	*pH*	*fn*	*a*	*d1 ... dk*

[Range] $3 \le (p_L + p_H \times 256) \le 65535$ $(0 \le p_L \le 255,\ 0 \le p_H \le 255)$
$fn = 11$
$a = 1$
$48 \le d \le 57$

[Default (upon shipment)]
d1...dk = “38400”

[Description]
- Sets the configuration item for the serial interface specified by *a* to the values specified by *d*.

a	Configuration item
1	Transmission speed

- Transmission speed settings (*a* = 1)

d1...dk	Transmission speed
“2400”	2400 bps
“4800”	4800 bps
“9600”	9600 bps
“19200”	19200 bps
“38400”	38400 bps
“57600”	57600 bps
“115200”	115200 bps

[Note]
- The configuration item set by this function is enabled by executing **GS (E** <Function 2> or restarting the printer. Note that the host computer must be set to enable the printer to communicate with the host computer.

<Function 12> **GS (E *pL pH fn a*** (*fn* = 12)

[Name] Transmit the configuration item for the serial interface

[Format]

ASCII	GS	(	E	*pL*	*pH*	*fn*	*a*
Hex	1D	28	45	*pL*	*pH*	*fn*	*a*
Decimal	29	40	69	*pL*	*pH*	*fn*	*a*

[Range] $(p_L + p_H \times 256) = 2$ $(p_L = 2,\ p_H = 0)$
$fn = 12$
$a = 1$

[Description]
- Transmits the configuration item for the serial interface specified by *a*.

a	Configuration item
1	Transmission speed

GS (H *pL pH fn [parameters]*

[Name] Request transmission of response or status

[Description]
- Various processes are performed for the response.
  - *pL*, *pH* specify (*pL* + *pH* × 256) as the number of bytes after *pH* (*fn* and *[parameters]*).
  - *fn* specifies the function.
  - *[parameters]* specify the process of each function.

fn	Format	Function No.	Function name
48	**GS (H *pL pH fn m d1 d2 d3 d4***	48	Set the process ID response.

[Note]
- Do not use this command in a system that uses the printer with the OPOS driver or the JavaPOS driver provided by Seiko Epson Corporation.

<Function 48> GS (H *pL pH fn m d1 d2 d3 d4* (*fn* = 48)

[Name] Set the process ID response

[Format]

ASCII	GS	(	H	*pL*	*pH*	*fn*	*m*	*d1*	*d2*	*d3*	*d4*
Hex	1D	28	48	*pL*	*pH*	*fn*	*m*	*d1*	*d2*	*d3*	*d4*
Decimal	29	40	72	*pL*	*pH*	*fn*	*m*	*d1*	*d2*	*d3*	*d4*

[Range] (*pL* + *pH* × 256) = 6 (*pL* =6, *pH* = 0)
fn = 48
m = 48
32 ≤ *d* ≤ 126

[Description]
- Saves the process ID specified by (*d1*, *d2*, *d3*, *d4*) for the data processed just before this function.

GS (K *pL pH fn [parameters]*

[Name] Select print control method(s)

[Description]
- Selects the print control methods.
  - *pL*, *pH* specify (*pL* + *pH* × 256) as the number of bytes after *pH* (*fn* and *[parameters]*).
  - *fn* specifies the function.
  - *[parameters]* specify the process of each function.

fn	Format	Function No.	Function name
50	**GS (K *pL pH fn m***	50	Select the print speed.
97	**GS (K *pL pH fn m***	97	Select the number of parts for the thermal head energization.

<Function 50> **GS (K *pL pH fn m*** (*fn* = 50)

[Name] Select the print speed

[Format]

ASCII	GS	(	K	*pL*	*pH*	*fn*	*m*
Hex	1D	28	4B	*pL*	*pH*	*fn*	*m*
Decimal	29	40	75	*pL*	*pH*	*fn*	*m*

[Range] ($p_L + p_H \times 256$) = 2 (p_L = 2, p_H = 0)
fn = 50
$0 \le m \le 9$, $48 \le m \le 57$

[Default] *m* = 0 (setting values of **GS (E** <Function 5: *a* = 6>)

[Description] • Selects the print speed.

m	Print speed	
0, 48	Setting values of **GS (E** <Function 5: *a* = 6>.	
1, 49	Print speed level 1.	slow
2, 50	Print speed level 2.	|
3, 51	Print speed level 3.	|
4, 52	Print speed level 4.	|
5, 53	Print speed level 5.	|
6, 54	Print speed level 6.	|
7, 55	Print speed level 7.	|
8, 56	Print speed level 8.	|
9, 57	Print speed level 9.	fast

[Note] When the low-power consumption mode is selected, the above setting values are ignored.

<Function 97> **GS (K *pL pH fn m*** (*fn* = 97)

[Name] Select the number of parts for the thermal head energization

[Format]

ASCII	GS	(	K	*pL*	*pH*	*fn*	*m*
Hex	1D	28	4B	*pL*	*pH*	*fn*	*m*
Decimal	29	40	75	*pL*	*pH*	*fn*	*m*

[Range] ($p_L + p_H \times 256$) = 2 (p_L = 2, p_H = 0)
fn = 97
$0 \le m \le 2$, $48 \le m \le 50$, *m* = 4, 52, 128

[Default] *m* = 0 (setting values of **GS (E** <Function 5: *a* = 97>)

[Description] • Selects the number of parts for the thermal head energization.

m	Number of parts of energization
0, 48	Setting values of **GS (E** <Function 5: *a* = 97>.
1, 49	One-part energization.
2, 50	Two-part energization.
4, 52	Four-part energization.
128	Automatic control of thermal head energization.

[Notes]
- Effective only when “single-color print control” is selected. When automatic control is selected, usual data is printed with one-part energization and a high duty data is printed with two-part energization.
- When “two-color print control” is selected, the thermal head energization setting is fixed to “two-part energizatioin.”
- When the low-power consumption mode is selected, the above setting values are ignored.

GS (L *pL pH m fn [parameters]*
GS 8 L *p1 p2 p3 p4 m fn [parameters]*

[Name] Set graphics data

[Format]

ASCII	GS	(	L	*pL*	*pH*	*m*	*fn*	*[parameters]*		
Hex	1D	28	4C	*pL*	*pH*	*m*	*fn*	*[parameters]*		
Decimal	29	40	76	*pL*	*pH*	*m*	*fn*	*[parameters]*		
ASCII	GS	8	L	*p1*	*p2*	*p3*	*p4*	*m*	*fn*	*[parameters]*
Hex	1D	38	4C	*p1*	*p2*	*p3*	*p4*	*m*	*fn*	*[parameters]*
Decimal	29	56	76	*p1*	*p2*	*p3*	*p4*	*m*	*fn*	*[parameters]*

- In the description below, only **GS (L** is used for explanation.
  - Note that **GS (L** and **GS 8 L** have the same function.
  - If the *[parameters]* in the Format column in the table below exceed 65533 bytes, use **GS 8 L**.
- The only differences between **GS (L** and **GS 8 L** are as listed below. The format for **GS 8 L** is not provided in the following descriptions; however, [Range], [Default], [Description], and [Notes] for parameters other than those listed in the table below are the same as for **GS (L**.

<Parameters specifying the number of parameters after *pH* or *p4*>

Command	Parameters	Structure	Maximum value	
GS (L	*pL*, *pH*	2 bytes	65,535	***bytes***
GS 8 L	*p1*, *p2*, *p3*, *p4*	4 bytes	4,294,967,295	***bytes***

[Description]
- Processes graphics data.
  - *pL*, *pH* specify (*pL* + *pH* × 256) as the number of bytes after *pH* (*m*, *fn*, and *[parameters]*).
  - *fn* specifies the function.
  - *[parameters]* specify the process of each function.

fn	Format	Function No.	Function name
0, 48	**GS (L *pL pH m fn***	48	Transmit the NV graphics memory capacity
2, 50	**GS (L *pL pH m fn***	50	Print the graphics data in the print buffer
3, 51	**GS (L *pL pH m fn***	51	Transmit the remaining capacity of the NV graphics memory
64	**GS (L *pL pH m fn d1 d2***	64	Transmit the key code list for defined NV graphics
65	**GS (L *pL pH m fn d1 d2 d3***	65	Delete all NV graphics data
66	**GS (L *pL pH m fn kc1 kc2***	66	Delete the specified NV graphics data
67	**GS (L *pL pH m fn a kc1 kc2 b xL xH yL yH [c d1...dk]1... [c d1...dk]b***	67	Define the NV graphics data (raster format)
69	**GS (L *pL pH m fn kc1 kc2 x y***	69	Print the specified NV graphics data
112	**GS (L *pL pH m fn a bx by c xL xH yL yH d1…dk***	112	Store the graphics data in the print buffer (raster format)

[Notes]

- Frequent write command executions by an NV memory write command may damage the NV memory. Therefore, it is recommended to limit writing the commands into the NV memory to less than 10 times a day.
- If the power is turned off or the printer is reset via an interface while this command is being executed, the printer may go into an abnormal condition. Be careful not to turn the power off or let the printer be reset via an interface while this command is being executed.
- While processing this command, the printer is BUSY while writing the data to the NV memory and stops receiving data. Therefore, be sure not to transmit data, including the real-time commands, while the printer is BUSY.
- When <Function 48, 51, or 64> is transmitted, do not transmit the subsequent data until the status is received. ESC/POS Handshaking Protocol procedures is required when using <Function 64>.

<Function 48> **GS (L *pL pH m fn*** (*fn* = 0, 48)

[Name] Transmit the NV graphics memory capacity

[Format]

ASCII	GS	(	L	*pL*	*pH*	*m*	*fn*
Hex	1D	28	4C	*pL*	*pH*	*m*	*fn*
Decimal	29	40	76	*pL*	*pH*	*m*	*fn*

[Range] $(p_L + p_H \times 256) = 2$ $(p_L = 2, p_H = 0)$
$m = 48$
$fn = 0, 48$

[Description]

- Transmits the entire capacity of the NV graphics area (number of bytes in the NV graphics area).

<Function 50> **GS (L *pL pH m fn*** (*fn* = 2, 50)

[Name] Print the graphics data in the print buffer

[Format]

ASCII	GS	(	L	*pL*	*pH*	*m*	*fn*
Hex	1D	28	4C	*pL*	*pH*	*m*	*fn*
Decimal	29	40	76	*pL*	*pH*	*m*	*fn*

[Range] $(p_L + p_H \times 256) = 2$ $(p_L = 2, p_H = 0)$
$m = 48$
$fn = 2, 50$

[Description]

- Prints the buffered graphics data stored by processing of **GS (L** <Function 112>.

<Function 51> **GS (L *pL pH m fn*** (*fn* = 3, 51)

[Name] Transmit the remaining capacity of the NV graphics memory

[Format]

ASCII	GS	(	L	*pL*	*pH*	*m*	*fn*
Hex	1D	28	4C	*pL*	*pH*	*m*	*fn*
Decimal	29	40	76	*pL*	*pH*	*m*	*fn*

[Range] ($p_L + p_H \times 256$) = 2 (p_L = 2, p_H = 0)
m = 48
fn = 3, 51

[Description]
- Transmits the number of bytes of remaining memory (unused area) in the NV graphics area.

<Function 64> **GS (L *pL pH m fn d1 d2*** (*fn* = 64)

[Name] Transmit the key code list for defined NV graphics

[Format]

ASCII	GS	(	L	*pL*	*pH*	*m*	*fn*	*d1*	*d2*
Hex	1D	28	4C	*pL*	*pH*	*m*	*fn*	*d1*	*d2*
Decimal	29	40	76	*pL*	*pH*	*m*	*fn*	*d1*	*d2*

[Range] ($p_L + p_H \times 256$) = 4 (p_L = 4, p_H = 0)
m = 48
fn = 64
d1 = 75
d2 = 67

[Description]
- Transmits the key code list for defined NV graphics.

<Function 65> **GS (L *pL pH m fn d1 d2 d3*** (*fn* = 65)

[Name] Delete all NV graphics data

[Format]

ASCII	GS	(	L	*pL*	*pH*	*m*	*fn*	*d1*	*d2*	*d3*
Hex	1D	28	4C	*pL*	*pH*	*m*	*fn*	*d1*	*d2*	*d3*
Decimal	29	40	76	*pL*	*pH*	*m*	*fn*	*d1*	*d2*	*d3*

[Range] ($p_L + p_H \times 256$) = 5 (p_L = 5, p_H = 0)
m = 48
fn = 65
d1 = 67
d2 = 76
d3 = 82

[Description]
- Deletes all NV graphics data.

<Function 66> **GS (L *pL pH m fn kc1 kc2*** (*fn* = 66)

[Name] Delete the specified NV graphics data

[Format]

ASCII	GS	(	L	*pL*	*pH*	*m*	*fn*	*kc1*	*kc2*
Hex	1D	28	4C	*pL*	*pH*	*m*	*fn*	*kc1*	*kc2*
Decimal	29	40	76	*pL*	*pH*	*m*	*fn*	*kc1*	*kc2*

[Range]
$(p_L + p_H \times 256) = 4$ $(p_L = 4, p_H = 0)$
$m = 48$
$fn = 66$
$32 \le kc1 \le 126$
$32 \le kc2 \le 126$

[Description]
- Deletes the NV graphics data defined by the key codes (*kc1* and *kc2*).

<Function 67>
GS (L *pL pH m fn a kc1 kc2 b xL xH yL yH [c d1…dk]1…[c d1....dk]b* (*fn* = 67)

[Name] Define the NV graphics data (raster format)

[Format]

ASCII	GS	(	L	*pL pH m fn a kc1 kc2 b xL xH yL yH [c d1...dk]1...[c d1...dk]b*
Hex	1D	28	4C	*pL pH m fn a kc1 kc2 b xL xH yL yH [c d1...dk]1...[c d1...dk]b*
Decimal	29	40	76	*pL pH m fn a kc1 kc2 b xL xH yL yH [c d1...dk]1...[c d1...dk]b*

[Range]
(p_L, p_H) for **GS (L**:
$12 \le (p_L + p_H \times 256) \le 65535$ $(0 \le p_L \le 255, 0 \le p_H \le 255)$
$(p1, p2, p3, p4)$ for **GS 8 L**:
$12 \le (p1 + p2 \times 256 + p3 \times 65536 + p4 \times 16777216) \le 4294967295$
$(0 \le p1 \le 255, 0 \le p2 \le 255, 0 \le p3 \le 255, 0 \le p4 \le 255)$
Common parameters for **GS (L** and **GS 8 L**:
$m = 48$
$fn = 67$
$a = 48$
$32 \le kc1 \le 126$
$32 \le kc2 \le 126$
$b = 1$ [when single-color print control is selected]
$b = 1, 2$ [when two-color print control is selected]
$1 \le (x_L + x_H \times 256) \le 8192$ $(0 \le x_L \le 255, 0 \le x_H \le 32)$
$1 \le (y_L + y_H \times 256) \le 2304$ $(0 \le y_L \le 255, 0 \le y_H \le 9)$
$c = 49$ [when single-color print control is selected]
$c = 49, 50$ [when two-color print control is selected]
$0 \le d \le 255$
$k = (\text{int}((x_L + x_H \times 256) + 7) / 8) \times (y_L + y_H \times 256)$
The entire capacity size = 256 KB maximum.

[Description]
- Defines the NV graphics data (raster format) as a record specified by the key codes (*kc1*, *kc2*) in the NV graphics area.
- *b* specifies the number of the color of the defined data.
- x_L, x_H specify the number of dots in the horizontal direction as ($x_L + x_H \times 256$).
- y_L, y_H specify the number of dots in the vertical direction as ($y_L + y_H \times 256$).
- *c* specifies the color of the defined data.

c	Defined data color (*)
49	Color 1
50	Color 2

(*) Color 1 means black (a high level of energy) in the specified two-color thermal paper.
Color 2 means red (a low level of energy) in the specified two-color thermal paper.

- *d* specifies the defined data (raster format).

[Notes]
- In cases where there is sufficient capacity is not available for storing NV graphics data specified by ($x_L + x_H \times 256$) and ($y_L + y_H \times 256$), this function is ignored.
- The number of items of NV graphics registered should be within 50 to shorten the execution time of this function. The execution time is 60 seconds or less when the number of items registered is within 50. The execution time for 100 items is 120 seconds or less.
- The [data value (*k*) + control information data value (24 bytes)] area of the NV graphics data domain is used when this function is executed.
- NV graphics and NV bit image (**FS q**) cannot be defined simultaneously. When this function is executed, all NV bit images are deleted.

<Function 69> **GS (L *pL pH m fn kc1 kc2 x y*** (*fn* = 69)

[Name] Print the specified NV graphics data

[Format]

ASCII	GS	(	L	*pL*	*pH*	*m*	*fn*	*kc1*	*kc2*	*x*	*y*
Hex	1D	28	4C	*pL*	*pH*	*m*	*fn*	*kc1*	*kc2*	*x*	*y*
Decimal	29	40	76	*pL*	*pH*	*m*	*fn*	*kc1*	*kc2*	*x*	*y*

[Range]
($p_L + p_H \times 256$) = 6 (p_L = 6, p_H = 0)
m = 48
fn = 69
$32 \le kc1 \le 126$
$32 \le kc2 \le 126$
x = 1, 2
y = 1, 2

[Description]
- Prints the NV graphics data defined by the key codes (*kc1* and *kc2*).
- The graphics data is enlarged by *x* and *y* in the horizontal and vertical directions.

x, *y*	Vertical direction	Horizontal direction
1	180 dpi	180 dpi
2	90 dpi	90 dpi

<Function 112> **GS (L** ***pL pH m fn a bx by c xL xH yL yH d1...dk*** (*fn* = 112)

[Name] Store the graphics data in the print buffer (raster format)

[Format]

ASCII	GS	(	L	*pL pH m fn a bx by c xL xH yL yH d1...dk*
Hex	1D	28	4C	*pL pH m fn a bx by c xL xH yL yH d1...dk*
Decimal	29	40	76	*pL pH m fn a bx by c xL xH yL yH d1...dk*

[Range] (p_L, p_H) for **GS (L**:

$11 \le (p_L + p_H \times 256) \le 65535$ $(0 \le p_L \le 255,\ 0 \le p_H \le 255)$

($p1$, $p2$, $p3$, $p4$) for **GS 8 L**:

$11 \le (p1 + p2 \times 256 + p3 \times 65536 + p4 \times 16777216) \le 4294967295$

$(0 \le p1 \le 255,\ 0 \le p2 \le 255,\ 0 \le p3 \le 255,\ 0 \le p4 \le 255)$

Common parameters for **GS (L** and **GS 8 L**:

$m = 48$
$fn = 112$
$a = 48$
$bx = 1, 2$
$by = 1, 2$
$c = 49$ [when single-color print control is selected]
$c = 49, 50$ [when two-color print control is selected]
$1 \le (x_L + x_H \times 256) \le 2047$ $(0 \le x_L \le 255,\ 0 \le x_H \le 7)$
When single-color print control is selected
$1 \le (y_L + y_H \times 256) \le 1662$ $(0 \le y_L \le 255,\ 0 \le y_H \le 6)$ [when by=1]
$1 \le (y_L + y_H \times 256) \le 831$ $(0 \le y_L \le 255,\ 0 \le y_H \le 3)$ [when by=2]
When two-color print control is selected
$1 \le (y_L + y_H \times 256) \le 831$ $(0 \le y_L \le 255,\ 0 \le y_H \le 3)$ [when by=1]
$1 \le (y_L + y_H \times 256) \le 415$ $(0 \le y_L \le 255,\ y_H = 0,1)$ [when by=2]
$0 \le d \le 255$
$k = (\mathrm{int}\ ((x_L + x_H \times 256) + 7) / 8) \times (y_L + y_H \times 256)$

[Description]
- Stores the graphics data (raster format) in the print buffer.
- The graphics data is enlarged by *bx* and *by* in the horizontal and vertical directions.

bx, *by*	Vertical direction	Horizontal direction
1	180 dpi	180 dpi
2	90 dpi	90 dpi

- *c* specifies the color for the stored data.

c	Stored data color (*)
49	Color 1
50	Color 2

(*) Color 1 means black (a high level of energy) in the specified two-color thermal paper.
Color 2 means red (a low level of energy) in the specified two-color thermal paper.

- x_L, x_H specify the number of dots in the horizontal direction as $(x_L + x_H \times 256)$.
- y_L, y_H specify the number of dots in the vertical direction as $(y_L + y_H \times 256)$.
- *d* specifies the stored data (raster format).

GS (N *pL pH fn [parameters]*

[Name] Select character style(s)

[Description]
- Selects the character style(s).
  - *pL*, *pH* specify (*pL* + *pH* × 256) as the number of bytes after *pH* (*fn* and *[parameters]*).
  - *fn* specifies the function.
  - *[parameters]* specify the process of each function.

fn	Format	Function No.	Function name
48	**GS (N *pL pH fn m***	48	Select character color.

[Note]
- This command setting affects only in two-color printing.

<Function 48> GS (N *pL pH fn m* (*fn* = 48)

[Name] Select character color

[Format]

ASCII	GS	(	N	*pL*	*pH*	*fn*	*m*
Hex	1D	28	4E	*pL*	*pH*	*fn*	*m*
Decimal	29	40	78	*pL*	*pH*	*fn*	*m*

[Range] (*pL* + *pH* × 256) = 2 (*pL* = 2, *pH* = 0)
fn = 48
m = 49, 50

[Default] *m* = 49

[Description]
- Selects character color.

m	Character color (*)
49	Color 1
50	Color 2

(*) Color 1 means black (a high level of energy) in the specified two-color thermal paper.
Color 2 means red (a low level of energy) in the specified two-color thermal paper.

GS (k *pL pH cn fn [parameters]*

[Name] Set up and print symbol

[Description]
- Processes the data for symbols.
  - *pL*, *pH* specify (*pL* + *pH* × 256) as the number of bytes after *pH* (*cn*, *fn*, and *[parameters]*).
  - *cn* specifies the type of symbol.
  - *fn* specifies the function.
  - *[parameters]* specify the process of each function.

cn	Type of Symbol
48	PDF417 (two-dimensional codes)
49	QR Code (two-dimensional codes)

cn	*fn*	Format	Function No.	Function name
48	65	**GS (k *pL pH cn fn n***	065	PDF417: Set the number of columns in the data region.
	66	**GS (k *pL pH cn fn n***	066	PDF417: Set the number of rows.
	67	**GS (k *pL pH cn fn n***	067	PDF417: Set the width of the module.
	68	**GS (k *pL pH cn fn n***	068	PDF417: Set the row height.
	69	**GS (k *pL pH cn fn m n***	069	PDF417: Set the error correction level.
	70	**GS (k *pL pH cn fn m***	070	PDF417: Select the options.
	80	**GS (k *pL pH cn fn m d1...dk***	080	PDF417: Store the data in the symbol storage area.
	81	**GS (k *pL pH cn fn m***	081	PDF417: Print the symbol data in the symbol storage area.
	82	**GS (k *pL pH cn fn m***	082	PDF417: Transmit the size information of the symbol data in the symbol storage area.
49	65	**GS (k *pL pH cn fn n1 n2***	165	QR Code: Select the model.
	67	**GS (k *pL pH cn fn n***	167	QR Code: Set the size of module.
	69	**GS (k *pL pH cn fn n***	169	QR Code: Select the error correction level.
	80	**GS (k *pL pH cn fn m d1...dk***	180	QR Code: Store the data into the symbol storage area.
	81	**GS (k *pL pH cn fn m***	181	QR Code: Print the symbol data in the symbol storage area.
	82	**GS (k *pL pH cn fn m***	182	QR Code: Transmit the size information of the symbol data in the symbol storage area.

- "Symbol data" means the data received with <Function 080 or 180> before encoding.
- "Symbol storage area" means the area where the data received with <Function 080 or 180> before encoding is stored.

[Notes]
- When <Function 082 or 182> is transmitted, do not transmit the subsequent data until the status is received.
- PDF417 (*cn*=48) is supported in ANK model.

[Reference] APPENDIX H, APPENDIX I

<Function 065> **GS (k *pL pH cn fn n*** (*cn* = 48, *fn* = 65)

[Name] PDF417: Set the number of columns in the data region

[Format]

ASCII	GS	(	k	*pL*	*pH*	*cn*	*fn*	*n*
Hex	1D	28	6B	*pL*	*pH*	*cn*	*fn*	*n*
Decimal	29	40	107	*pL*	*pH*	*cn*	*fn*	*n*

[Range] $(p_L + p_H \times 256) = 3$ $(p_L = 3, p_H = 0)$
$cn = 48$
$fn = 65$
$0 \le n \le 30$

[Default] $n = 0$

[Description]
- Sets the number of columns in the data region for PDF417.
  - When $n = 0$, specifies automatic processing. In this case, the number of columns in the data region is calculated from the number of codewords or the range of the print area.
  - When $n \neq 0$, sets the number of columns in the data region to n codewords:

[Notes]
- The following data is not included in the number of columns.
  - Start pattern and stop pattern
  - Left-row indicator codewords and right-row indicator codewords

<Function 066> **GS (k *pL pH cn fn n*** (*cn* = 48, *fn* = 66)

[Name] PDF417: Set the number of rows

[Format]

ASCII	GS	(	k	*pL*	*pH*	*cn*	*fn*	*n*
Hex	1D	28	6B	*pL*	*pH*	*cn*	*fn*	*n*
Decimal	29	40	107	*pL*	*pH*	*cn*	*fn*	*n*

[Range] $(p_L + p_H \times 256) = 3$ $(p_L = 3, p_H = 0)$
$cn = 48$
$fn = 66$
$n = 0, 3 \le n \le 90$

[Default] $n = 0$

[Description]
- Sets the number of rows for PDF417.
  - When $n = 0$, specifies automatic processing. In this case, the number of rows in the data region is calculated from the number of codewords or the range of the print area.
  - When $n \neq 0$, sets the number of rows to n rows.

<Function 067> **GS (k *pL pH cn fn n*** (*cn* = 48, *fn* = 67)

[Name] PDF417: Set the width of the module

[Format]

ASCII	GS	(	k	*pL*	*pH*	*cn*	*fn*	*n*
Hex	1D	28	6B	*pL*	*pH*	*cn*	*fn*	*n*
Decimal	29	40	107	*pL*	*pH*	*cn*	*fn*	*n*

[Range] $(p_L + p_H \times 256) = 3$ $(p_L = 3, p_H = 0)$
$cn = 48$
$fn = 67$
$2 \le n \le 8$

[Default] $n = 3$

[Description] • Sets the width of the module for PDF417 to *n* dots.

<Function 068> **GS (k *pL pH cn fn n*** (*cn* = 48, *fn* = 68)

[Name] PDF417: Set the row height

[Format]

ASCII	GS	(	k	*pL*	*pH*	*cn*	*fn*	*n*
Hex	1D	28	6B	*pL*	*pH*	*cn*	*fn*	*n*
Decimal	29	40	107	*pL*	*pH*	*cn*	*fn*	*n*

[Range] $(p_L + p_H \times 256) = 3$ $(p_L = 3, p_H = 0)$
$cn = 48$
$fn = 68$
$2 \le n \le 8$

[Default] $n = 3$

[Description] • Sets the row height for PDF417 to [$n \times$ (the width of the module)].

<Function 069> **GS (k *pL pH cn fn m n*** (*cn* = 48, *fn* = 69)

[Name] PDF417: Set the error correction level

[Format]

ASCII	GS	(	k	*pL*	*pH*	*cn*	*fn*	*m*	*n*
Hex	1D	28	6B	*pL*	*pH*	*cn*	*fn*	*m*	*n*
Decimal	29	40	107	*pL*	*pH*	*cn*	*fn*	*m*	*n*

[Range] ($p_L + p_H \times 256$) = 4 (p_L = 4, p_H = 0)
cn = 48
fn = 69
m = 48, 49
$48 \le n \le 56$ [when *m* = 48]
$1 \le n \le 40$ [when *m* = 49]

[Default] *m* = 49, *n* = 1

[Description]
- Sets the error correction level for PDF417.
  - When *m* = 48, the error correction level is set by the "Level Setting" and the error correction level set by "Ratio Setting" is canceled. The number of error correction codewords are as follows:

n	Function	Number of error correction codewords
48	Select error correction level 0	2
49	Select error correction level 1	4
50	Select error correction level 2	8
51	Select error correction level 3	16
52	Select error correction level 4	32
53	Select error correction level 5	64
54	Select error correction level 6	128
55	Select error correction level 7	256
56	Select error correction level 8	512

  - When *m* = 49, the error correction level is set by the "Ratio Setting" to the level indicated by the number for encoded data, and the error correction level set by the "Level Setting" is canceled. The rate is set to [$n \times 10\%$].

    The error correction levels in the following table are determined by the calculation [Data codeword $\times n \times 0.1$ = (A)] (Fractions of 0.5 and over are rounded up, and others are truncated.)

Result (A)	Use the error correction level	Number of error correction codeword
0 to 3	Error correction level 1	4
4 to 10	Error correction level 2	8
11 to 20	Error correction level 3	16
21 to 45	Error correction level 4	32
46 to 100	Error correction level 5	64
101 to 200	Error correction level 6	128
201 to 400	Error correction level 7	256
401 or more	Error correction level 8	512

<Function 070> **GS (k *pL pH cn fn m*** (*cn* = 48, *fn* = 70)

[Name] PDF417: Select the options

[Format]

ASCII	GS	(	k	*pL*	*pH*	*cn*	*fn*	*m*
Hex	1D	28	6B	*pL*	*pH*	*cn*	*fn*	*m*
Decimal	29	40	107	*pL*	*pH*	*cn*	*fn*	*m*

[Range] $(p_L + p_H \times 256) = 3$ $(p_L = 3, p_H = 0)$
$cn = 48$
$fn = 70$
$m = 0, 1$

[Default] $m = 0$

[Description]
- Selects the options for PDF417.

m	Function
0	Selects the standard PDF417.
1	Selects the truncated PDF417.

<Function 080> **GS (k *pL pH cn fn m d1…dk*** (*cn* = 48, *fn* = 80)

[Name] PDF417: Store the data in the symbol storage area

[Format]

ASCII	GS	(	k	*pL*	*pH*	*cn*	*fn*	*m*	*d1…dk*
Hex	1D	28	6B	*pL*	*pH*	*cn*	*fn*	*m*	*d1…dk*
Decimal	29	40	107	*pL*	*pH*	*cn*	*fn*	*m*	*d1…dk*

[Range] $4 \le (p_L + p_H \times 256) \le 65535$ $(0 \le p_L \le 255, 0 \le p_H \le 255)$
$cn = 48$
$fn = 80$
$m = 48$
$0 \le d \le 255$
$k = (p_L + p_H \times 256) - 3$

[Description]
- Stores the PDF417 symbol data (*d1...dk*) in the symbol storage area.

<Function 081> **GS (k *pL pH cn fn m*** (*cn* = 48, *fn* = 81)

[Name] PDF417: Print the symbol data in the symbol storage area

[Format]

ASCII	GS	(	k	*pL*	*pH*	*cn*	*fn*	*m*
Hex	1D	28	6B	*pL*	*pH*	*cn*	*fn*	*m*
Decimal	29	40	107	*pL*	*pH*	*cn*	*fn*	*m*

[Range] $(p_L + p_H \times 256) = 3$ $(p_L = 3, p_H = 0)$
$cn = 48$
$fn = 81$
$m = 48$

[Description]
- Encodes and prints the PDF417 symbol data in the symbol storage area with **GS (k** <Function 080>.

[Notes]
- User must secure the quiet zone (left, right, upward, and downward space areas defined by the PDF417 symbol specifications) for PDF417 printing.
- In standard mode, symbols higher than 831 dots cannot be printed with this printer.

<Function 082> **GS (k *pL pH cn fn m*** (*cn* = 48, *fn* = 82)

[Name] PDF417: Transmit the size information of the symbol data in the symbol storage area

[Format]

ASCII	GS	(	k	*pL*	*pH*	*cn*	*fn*	*m*
Hex	1D	28	6B	*pL*	*pH*	*cn*	*fn*	*m*
Decimal	29	40	107	*pL*	*pH*	*cn*	*fn*	*m*

[Range] $(p_L + p_H \times 256) = 3$ $(p_L = 3, p_H = 0)$
cn = 48
fn = 82
m = 48

[Description]
- Transmits the size information for the encoded PDF417 symbol data in the symbol storage area with **GS (k** <Function 080>.

[Notes]
- This function does not print.
- The size information does not include the quiet zone (left, right, upward, and downward space areas defined by the PDF417 symbol specifications).

<Function 165> **GS (k *pL pH cn fn n1 n2*** (*cn* = 49, *fn* = 65)

[Name] QR Code: Select the model

[Format]

ASCII	GS	(	k	*pL*	*pH*	*cn*	*fn*	*n1*	*n2*
Hex	1D	28	6B	*pL*	*pH*	*cn*	*fn*	*n1*	*n2*
Decimal	29	40	107	*pL*	*pH*	*cn*	*fn*	*n1*	*n2*

[Range] $(p_L + p_H \times 256) = 4$ $(p_L = 4, p_H = 0)$
cn = 49
fn = 65
n1 = 49, 50
n2 = 0

[Default] *n1* = 50, *n2* = 0

[Description]
- Selects the model for QR Code.

n1	Function
49	Selects model 1 conversion processing.
50	Selects model 2 conversion processing.

<Function 167> **GS (k *pL pH cn fn n*** (*cn* = 49, *fn* = 67)

[Name] QR Code: Set the size of module

[Format]

ASCII	GS	(	k	*pL*	*pH*	*cn*	*fn*	*n*
Hex	1D	28	6B	*pL*	*pH*	*cn*	*fn*	*n*
Decimal	29	40	107	*pL*	*pH*	*cn*	*fn*	*n*

[Range] $(p_L + p_H \times 256) = 3$ $(p_L = 3, p_H = 0)$
cn = 49
fn = 67
$1 \le n \le 16$

[Default] *n* = 3

[Description]
- Sets the size of the module for QR Code to *n* dots.

<Function 169> **GS (k *pL pH cn fn n*** (*cn* = 49, *fn* = 69)

[Name] QR Code: Select the error correction level

[Format]

ASCII	GS	(	k	*pL*	*pH*	*cn*	*fn*	*n*
Hex	1D	28	6B	*pL*	*pH*	*cn*	*fn*	*n*
Decimal	29	40	107	*pL*	*pH*	*cn*	*fn*	*n*

[Range] $(p_L + p_H \times 256) = 3$ $(p_L = 3, p_H = 0)$
$cn = 49$
$fn = 69$
$48 \le n \le 51$

[Default] $n = 48$

[Description]
- Selects the error correction level for QR Code.

n	Function	Reference: Approx. figure of recovery
48	Select error correction level L	7 %
49	Select error correction level M	15 %
50	Select error correction level Q	25 %
51	Select error correction level H	30 %

<Function 180> **GS (k *pL pH cn fn m d1…dk*** (*cn* = 49, *fn* = 80)

[Name] QR Code: Store the data in the symbol storage area

[Format]

ASCII	GS	(	k	*pL*	*pH*	*cn*	*fn*	*m*	*d1…dk*
Hex	1D	28	6B	*pL*	*pH*	*cn*	*fn*	*m*	*d1…dk*
Decimal	29	40	107	*pL*	*pH*	*cn*	*fn*	*m*	*d1…dk*

[Range] $4 \le (p_L + p_H \times 256) \le 7092$ $(0 \le p_L \le 255, 0 \le p_H \le 27)$
$cn = 49$
$fn = 80$
$m = 48$
$0 \le d \le 255$
$k = (p_L + p_H \times 256) - 3$

[Description]
- Stores the QR Code symbol data (*d1...dk*) into the symbol storage area.

<Function 181> **GS (k *pL pH cn fn m*** (*cn* = 49, *fn* = 81)

[Name] QR Code: Print the symbol data in the symbol storage area

[Format]

ASCII	GS	(	k	*pL*	*pH*	*cn*	*fn*	*m*
Hex	1D	28	6B	*pL*	*pH*	*cn*	*fn*	*m*
Decimal	29	40	107	*pL*	*pH*	*cn*	*fn*	*m*

[Range] $(p_L + p_H \times 256) = 3$ $(p_L = 3, p_H = 0)$
$cn = 49$
$fn = 81$
$m = 48$

[Description]
- Encodes and prints the QR Code symbol data in the symbol storage area with **GS (k** <Function 180>.

[Note]
- User must secure the quiet zone (left, right, upward, and downward space areas defined by the QR Code symbol specifications) for QR Code printing.

<Function 182> **GS (k** ***pL pH cn fn m*** (*cn* = 49, *fn* = 82)

[Name] QR Code: Transmit the size information of the symbol data in the symbol storage area

[Format]

ASCII	GS	(	k	*pL*	*pH*	*cn*	*fn*	*m*
Hex	1D	28	6B	*pL*	*pH*	*cn*	*fn*	*m*
Decimal	29	40	107	*pL*	*pH*	*cn*	*fn*	*m*

[Range] $(p_L + p_H \times 256) = 3$ $(p_L = 3, p_H = 0)$
$cn = 49$
$fn = 82$
$m = 48$

[Description]
- Transmits the size information for the encoded QR Code symbol data in the symbol storage area with **GS (k** <Function 180>.

[Notes]
- This function does not print data.
- The size information does not include the quiet zone (left, right, upward, and downward space areas defined by the QR Code symbol specifications).

GS ∗ *x y d1...dk* [obsolete command]

[Name] Define downloaded bit image

[Format]

ASCII	GS	∗	*x*	*y*	*d1...dk*
Hex	1D	2A	*x*	*y*	*d1...dk*
Decimal	29	42	*x*	*y*	*d1...dk*

[Range] $1 \le x \le 255$
$1 \le y \le 48$ [where $1 \le x \times y \le 1536$]
$0 \le d \le 255$
$k = x \times y \times 8$

[Description]
- Defines the downloaded bit image in the downloaded graphic area.
  - *x* specifies the number of bytes in the horizontal direction as *x* bytes.
  - *y* specifies the number of bytes in the vertical direction as *y* bytes.
  - *d* specifies the defined data (column format).

[Note]
- A downloaded bit image and user-defined characters (**ESC &**) cannot be defined simultaneously. When this command is executed, all user-defined characters are deleted.

GS / *m*

[obsolete command]

[Name] Print downloaded bit image

[Format]

ASCII	GS	/	*m*
Hex	1D	2F	*m*
Decimal	29	47	*m*

[Range] $0 \le m \le 3$, $48 \le m \le 51$

[Description]
- Prints downloaded bit image defined by **GS ∗** and using the mode specified by *m*.

m	Mode	Vertical direction	Horizontal direction
0, 48	Normal	180 dpi	180 dpi
1, 49	Double-width	180 dpi	90 dpi
2, 50	Double-height	90 dpi	180 dpi
3, 51	Quadruple	90 dpi	90 dpi

GS :

[Name] Start/end macro definition

[Format]

ASCII	GS	:
Hex	1D	3A
Decimal	29	58

[Description]
- Starts or ends macro definition.

[Note]
- The contents of the macro can be defined up to 2048 bytes.

GS B *n*

[Name] Turn white/black reverse print mode on/off

[Format]

ASCII	GS	B	*n*
Hex	1D	42	*n*
Decimal	29	66	*n*

[Range] $0 \le n \le 255$

[Default] $n = 0$

[Description]
- Turns white/black reverse print mode on or off.
  - When the LSB of *n* is 0, turns off white/black reverse mode.
  - When the LSB of, *n* is 1, turns on white/black reverse mode.

GS H *n*

[Name] Select print position of HRI characters

[Format]

ASCII	GS	H	*n*
Hex	1D	48	*n*
Decimal	29	72	*n*

[Range] $0 \le n \le 3$, $48 \le n \le 51$

[Default] $n = 0$

[Description] • Selects the print position of HRI characters when printing a bar code.

n	Print position
0, 48	Not printed.
1, 49	Above the bar code.
2, 50	Below the bar code.
3, 51	Both above and below the bar code.

GS I *n*

[Name] Transmit printer ID

[Format]

ASCII	GS	I	*n*
Hex	1D	49	*n*
Decimal	29	73	*n*

[Range] $n = 1, 2, 49, 50$ [the printer ID]
$65 \le n \le 69$ [printer information B]

[Description]
- Transmits the printer ID or the information of the printer specified.
- The printer IDs that can be specified are as follows:

n	Type of printer ID	ID
1, 49	Printer model ID	Hexadecimal: 20 / Decimal: 32
2, 50	Type ID	See table [Type ID].

[Type ID]

Bit	Off/On	Hex	Decimal	Contents
0	Off	00	0	Multi-byte code characters not supported.
	On	01	1	Multi-byte code characters supported.
1	On	02	2	Autocutter Installed. (Fixed)
2,3	--	--	--	Not used.
4	Off	00	0	Fixed.
5	--	--	--	Reserved.
6	--	--	--	Not used.
7	Off	00	0	Fixed.

- The information B that can be specified is as follows:

n	Type of printer information	Contents
65	Firmware version	Depends on firmware version.
66	Manufacturer	“EPSON”
67	Printer name	“TM-T88IV”
68	Product ID	Serial number.
69	Type of mounted additional fonts	Japanese model: “KANJI JAPANESE”
		Simplified Chinese model: ”CHINA GB18030”
		Traditional Chinese model: “TAIWAN BIG-5”

[Note]
- When this command is transmitted, do not transmit the subsequent data until the status is received.

GS L *nL nH*

[Name] Set left margin

[Format]

ASCII	GS	L	n_L	n_H
Hex	1D	4C	n_L	n_H
Decimal	29	76	n_L	n_H

[Range] $0 \le (n_L + n_H \times 256) \le 65535$ $(0 \le n_L \le 255, 0 \le n_H \le 255)$

[Default] $(n_L + n_H \times 256) = 0$ $(n_L = 0, n_H = 0)$

[Description]
- In standard mode, sets the left margin to $[(n_L + n_H \times 256) \times$ (horizontal motion unit)$]$.

GS P *x y*

[Name] Set horizontal and vertical motion units

[Format]

ASCII	GS	P	*x*	*y*
Hex	1D	50	*x*	*y*
Decimal	29	80	*x*	*y*

[Range] $0 \le x \le 255$
$0 \le y \le 255$

[Default] $x = 180$, $y = 360$

[Description]
- Sets the horizontal and vertical motion units to approximately 25.4/*x* mm {1/*x*"} and approximately 25.4/*y* mm {1/*y*"}, respectively.
- When $x = 0$, the default value of the horizontal motion unit is used.
- When $y = 0$, the default value of the vertical motion unit is used.

<A> GS V *m*
<B> GS V *m n*

[Name] Select cut mode and cut paper

[Format]

<A>	ASCII	GS	V	*m*	
	Hex	1D	56	*m*	
	Decimal	29	86	*m*	
<B>	ASCII	GS	V	*m*	*n*
	Hex	1D	56	*m*	*n*
	Decimal	29	86	*m*	*n*

[Range] <A> $m = 0, 1, 48, 49$
<B> $m = 65, 66$, $0 \le n \le 255$

[Description]
- Executes paper cutting specified by *m*.

	m	Function
<A>	0, 48 1, 49	Cuts paper.
<B>	65, 66	Feeds paper to (cutting position + [$n \times$ (vertical motion unit)]) and cuts the paper.

[Note]
- This printer executes a partial cut (one point left uncut).

GS W *nL nH*

[Name] Set print area width

[Format]

ASCII	GS	W	n_L	n_H
Hex	1D	57	n_L	n_H
Decimal	29	87	n_L	n_H

[Range] $0 \le (n_L + n_H \times 256) \le 65535$ $(0 \le n_L \le 255, 0 \le n_H \le 255)$

[Default] $(n_L + n_H \times 256) = 512$ $(n_L = 0, n_H = 2)$ [80 mm paper width model]
$(n_L + n_H \times 256) = 360$ $(n_L = 104, n_H = 1)$ [58 mm paper width model]

[Description]
- In standard mode, sets the print area width to [$(n_L + n_H \times 256) \times$ (horizontal motion unit)].

GS \ *nL nH*

[Name] Set relative vertical print position in page mode

[Format]

ASCII	GS	\	*nL*	*nH*
Hex	1D	5C	*nL*	*nH*
Decimal	29	92	*nL*	*nH*

[Range] $-32768 \le (n_L + n_H \times 256) \le 32767$

[Description]
- In page mode, moves the vertical print position to [($n_L + n_H \times 256$) × (vertical or horizontal motion unit)] from the current position.
- A positive number specifies downward movement, and a negative number specifies upward movement.

GS ^ *r t m*

[Name] Execute macro

[Format]

ASCII	GS	^	*r*	*t*	*m*
Hex	1D	5E	*r*	*t*	*m*
Decimal	29	94	*r*	*t*	*m*

[Range]
$1 \le r \le 255$
$0 \le t \le 255$
$m = 0, 1$

[Description]
- Executes the macro that was defined with **GS :**.

m	Operation
0	Executes the macro *r* times continuously at an interval of [$t \times 100$ ms].
1	After waiting for [$t \times 100$ ms], flashes the LED indicator and waits for the FEED button to be pressed. After the button is pressed, executes the macro once. Then repeats the operation *r* times.

GS a *n*

[Name] Enable/disable Automatic Status Back (ASB)

[Format]

ASCII	GS	a	*n*
Hex	1D	61	*n*
Decimal	29	97	*n*

[Range] $0 \le n \le 255$

[Default] *n* = 0 [when DIP switch [SW 2-1] is off.]
n = 2 [when DIP switch [SW 2-1] is on.]

[Description]

- Enables or disables basic ASB (Automatic Status Back).

(*n*) Bit	Off/On	Hex	Decimal	Function
0	Off	00	0	Drawer kick-out connector status disabled.
	On	01	1	Drawer kick-out connector status enabled.
1	Off	00	0	Online/offline status disabled.
	On	02	2	Online/offline status enabled.
2	Off	00	0	Error status disabled.
	On	04	4	Error status enabled.
3	Off	00	0	Roll paper sensor status disabled.
	On	08	8	Roll paper sensor status enabled.
4 - 7	Off	00	0	Reserved.

- While basic ASB is active, the selected enabled basic ASB status is transmitted whenever the status changes.

- The basic ASB status to be transmitted is the four bytes that follow:
  - First byte (printer information)

Bit	Off/On	Hex	Decimal	Status
0, 1	Off	00	0	Fixed.
2	Off	00	0	Drawer kick-out connector pin 3 is LOW.
	On	04	4	Drawer kick out connector pin 3 is HIGH.
3	Off	00	0	Online.
	On	08	8	Offline.
4	On	10	16	Fixed.
5	Off	00	0	Cover is closed.
	On	20	32	Cover is open.
6	Off	00	0	Paper is not being fed with the paper FEED button.
	On	40	64	Paper is being fed with the paper FEED button.
7	Off	00	0	Fixed.

• Second byte (printer information)

Bit	Off/On	Hex	Decimal	Status
0 - 2	--	--	--	Reserved.
3	Off	00	0	No autocutter error.
	On	08	8	Autocutter error occurred.
4	Off	00	0	Fixed.
5	Off	00	0	No unrecoverable error.
	On	20	32	Unrecoverable error occurred.
6	Off	00	0	No automatically recoverable error.
	On	40	64	Automatically recoverable error occurred.
7	Off	00	0	Fixed.

• Third byte (paper sensor information)

Bit	Off/On	Hex	Decimal	Status
0, 1	Off	00	0	Roll paper near-end sensor: paper adequate.
	On	03	3	Roll paper near-end sensor: paper near end.
2, 3	Off	00	0	Roll paper end sensor (Paper sensor): paper present.
	On	0C	12	Roll paper end sensor (Paper sensor): paper not present.
4	Off	00	0	Fixed.
5, 6	--	--	--	Reserved.
7	Off	00	0	Fixed.

Bits 2 and 3: While the cover is open, this shows the state when the cover was still closed.

• Fourth byte (paper sensor information)

Bit	Off/On	Hex	Decimal	Status
0 - 3	--	--	--	Reserved.
4	Off	00	0	Fixed.
5, 6	--	--	--	Reserved.
7	Off	00	0	Fixed.

[Reference] APPENDIX J

GS b *n*

[Name] Turn smoothing mode on/off

[Format]

ASCII	GS	b	*n*
Hex	1D	62	*n*
Decimal	29	98	*n*

[Range] $0 \le n \le 255$

[Default] $n = 0$

[Description]
- Turns smoothing mode on or off.
- When the LSB of *n* is 0, turns off smoothing mode.
- When the LSB of *n* is 1, turns on smoothing mode.

GS f *n*

[Name] Select font for HRI characters

[Format]

ASCII	GS	f	*n*
Hex	1D	66	*n*
Decimal	29	102	*n*

[Range] *n* = 0, 1, 48, 49

[Default] *n* = 0

[Description] • Selects a font for the HRI characters when printing a bar code.

n	Font for the HRI characters
0, 48	Character font A (12 × 24)
1, 49	Character font B (9 × 17)

GS g 0 *m* n_L n_H

[Name] Initialize maintenance counter

[Format]

ASCII	GS	g	0	*m*	n_L	n_H
Hex	1D	67	30	*m*	n_L	n_H
Decimal	29	103	48	*m*	n_L	n_H

[Range] *m* = 0

($n_L + n_H \times 256$) = 20, 21, 50, 70 (n_L = 20, 21, 50, 70, n_H = 0)

[Description] • Sets the resettable maintenance counter specified by ($n_L + n_H \times 256$) to 0.

($n_L + n_H \times 256$)		Maintenance counter [Units]
Hex	Decimal	
14	20	Number of lines fed. [Lines]
15	21	Number of head energization. [Times]
32	50	Number of autocutter operations. [Times].
46	70	Duration of printer operation. [Hours].

[Notes]
- Frequent write command executions by an NV memory write command may damage the NV memory. Therefore, it is recommended to limit writing the commands into the NV memory to less than 10 times a day.
- If the power is turned off or the printer is reset via an interface while this command is being executed, the printer may go into an abnormal condition. Do not turn the power off or do not reset the printer via an interface while this command is being executed.
- While processing this command, the printer may become BUSY while writing the data to the NV memory and stops receiving data. Therefore, do not transmit data from the host computer while the printer is BUSY.

[Reference] APPENDIX G

GS g 2 *m* n_L n_H

[Name] Transmit maintenance counter

[Format]

ASCII	GS	g	2	*m*	n_L	n_H
Hex	1D	67	32	*m*	n_L	n_H
Decimal	29	103	50	*m*	n_L	n_H

[Range] $m = 0$

$(n_L + n_H \times 256) = 20, 21, 50, 70, 148, 149, 178, 198$

$(n_L = 20, 21, 50, 70, 148, 149, 178, 198, \quad n_H = 0)$

[Description]
- Transmits the value of the maintenance counter specified by $(n_L + n_H \times 256)$.

$(n_L + n_H \times 256)$		Maintenance counter [Units]	Type of counter
Hex	Decimal		
14	20	Number of lines fed. [Lines]	Resettable (can be reset)
15	21	Number of head energization. [Times]	
32	50	Number of autocutter operations. [Times].	
46	70	Duration of printer operation. [Hours].	
94	148	Number of lines fed. [Lines]	Cumulative
95	149	Number of head energization. [Times]	
B2	178	Number of autocutter operations. [Times].	
C6	198	Duration of printer operation. [Hours].	

[Notes]
- The maintenance counter values are measurements; therefore, their values will be affected by the timing of errors and how and when the power is turned off.
- When this command is transmitted, do not transmit the subsequent data until the status is received.

[Reference] APPENDIX G

GS h *n*

[Name] Set bar code height

[Format]

ASCII	GS	h	*n*
Hex	1D	68	*n*
Decimal	29	104	*n*

[Range] $1 \le n \le 255$

[Default] $n = 162$

[Description]
- Sets the height of the bar code to *n* dots.

<A> GS k *m d1...dk NUL*
<B> GS k *m n d1...dn*

[Name] Print bar code

[Format]

<A>	ASCII	GS	k	*m*	*d1...dk*	*NUL*	
	Hex	1D	6B	*m*	*d1...dk*	*00*	
	Decimal	29	107	*m*	*d1...dk*	*0*	
<B>	ASCII	GS	k	*m*	*n*	*d1...dn*	
	Hex	1D	6B	*m*	*n*	*d1...dn*	
	Decimal	29	107	*m*	*n*	*d1...dn*	

[Range] <A> $0 \le m \le 6$ (For the range of *k* and *d,* see [Description].)
<B> $65 \le m \le 73$ (For the range of *n* and *d,* see [Description].)

[Description]
- Prints the bar code using the bar code system specified by *m*.

For <Function A>

m	Bar code system	Range of *k*	Range of *d*
0	UPC-A	$k = 11, 12$	$48 \le d \le 57$
1	UPC-E	$k = 11, 12$	$48 \le d \le 57$ [where $d1 = 48$]
2	JAN13 / EAN13	$k = 12, 13$	$48 \le d \le 57$
3	JAN8 / EAN8	$k = 7, 8$	$48 \le d \le 57$
4	CODE39	$1 \le k$	$48 \le d \le 57$, $65 \le d \le 90$, $d = 32, 36, 37, 42, 43, 45, 46, 47$
5	ITF	$2 \le k$ (even number)	$48 \le d \le 57$
6	CODABAR (NW-7)	$2 \le k$	$48 \le d \le 57$, $65 \le d \le 68$, $97 \le d \le 100$, $d = 36, 43, 45, 46, 47, 58$ [where $65 \le d1 \le 68$, $65 \le dk \le 68$, $97 \le d1 \le 100$, $97 \le dk \le 100$]

- *k* of <Function A> indicates the number of bytes of bar code data.
- *d* specifies the bar code data.

For <Function B>

m	Bar code system	Range of *n*	Range of *d*
65	UPC-A	n = 11, 12	$48 \le d \le 57$
66	UPC-E	n = 11, 12	$48 \le d \le 57$ [where $d1$ = 48]
67	JAN13 / EAN13	n = 12, 13	$48 \le d \le 57$
68	JAN8 / EAN8	n = 7, 8	$48 \le d \le 57$
69	CODE39	$1 \le n \le 255$	$48 \le d \le 57$, $65 \le d \le 90$, d = 32, 36, 37, 42, 43, 45, 46, 47
70	ITF	$2 \le n \le 254$ (even number)	$48 \le d \le 57$
71	CODABAR (NW-7)	$2 \le n \le 255$	$48 \le d \le 57$, $65 \le d \le 68$, $97 \le d \le 100$, d = 36, 43, 45, 46, 47, 58 [where $65 \le d1 \le 68$, $65 \le dn \le 68$, $97 \le d1 \le 100$, $97 \le dn \le 100$]
72	CODE93	$1 \le n \le 255$	$0 \le d \le 127$
73	CODE128	$2 \le n \le 255$	$0 \le d \le 127$ [where $d1$ = 123, $65 \le d2 \le 67$]

- *n* of <Function B> specifies the number of bytes of bar code data.
- *d* specifies the bar code data.

[Note]
- Users must secure the quiet zone (left or right side space area defined by the bar code standard) for bar code printing.

[Reference] APPENDIX H, APPENDIX I

GS r *n*

[Name] Transmit status

[Format]

ASCII	GS	r	*n*
Hex	1D	72	*n*
Decimal	29	114	*n*

[Range] *n* = 1, 2, 49, 50

[Description]
- Transmits the status.

n	Function
1, 49	Transmits paper sensor status.
2, 50	Transmits drawer kick-out connector status.

- This printer transmits the following status.
  - Paper sensor status (*n* = 1, 49)

Bit	Off/On	Hex	Decimal	Status
0, 1	Off	00	0	Roll paper near-end sensor: paper adequate.
	On	03	3	Roll paper near-end sensor: paper near end.
2, 3	Off	00	0	Roll paper end sensor (Paper sensor): paper present.
	On	0C	12	Roll paper end sensor (Paper sensor): paper not present.
4	Off	00	0	Fixed.
5, 6	--	--	--	Reserved.
7	Off	00	0	Fixed.

Bits 2 and 3: While the cover is open, this shows the state when the cover was still closed (this command is not be executed).

  - Drawer kick-out connector status (*n* = 2, 50)

Bit	Off/On	Hex	Decimal	Status
0	Off	00	0	Drawer kick-out connector pin 3 is LOW.
	On	01	1	Drawer kick-out connector pin 3 is HIGH.
1 - 3	--	--	--	Reserved.
4	Off	00	0	Fixed.
5, 6	--	--	--	Reserved.
7	Off	00	0	Fixed.

[Note]
- When this command is transmitted, do not transmit the subsequent data until this status is received.

GS w *n*

[Name] Set bar code width

[Format]

ASCII	GS	w	*n*
Hex	1D	77	*n*
Decimal	29	119	*n*

[Range] $2 \le n \le 6$

[Default] $n = 3$

[Description]
- Sets the horizontal size of the bar code.

n	Multi-level bar code	Binary-level bar code	
	Module width (mm)	Thin element width (mm)	Thick element width (mm)
2	0.282	0.282	0.706
3	0.423	0.423	1.129
4	0.564	0.564	1.411
5	0.706	0.706	1.834
6	0.847	0.847	2.258

- Multi-level bar codes are as follows:
  UPC-A, UPC-E, JAN13 / EAN13, JAN8 / EAN8, CODE93, and CODE128
- Binary-level bar codes are as follows:
  CODE39, ITF, and CODABAR

6.4 Commands of Multi-byte Code Characters (for Japanese Model, Simplified Chinese Model, and Traditional Chinese Model)

FS ! *n*

[Name] Select print mode(s) for Kanji characters

[Format]

ASCII	FS	!	*n*
Hex	1C	21	*n*
Decimal	28	33	*n*

[Range] $0 \le n \le 255$

[Default] $n = 0$

[Description]
- Selects the character styles (double-height, double-width, and Kanji-underlined) together for multi-byte code character.

(*n*) Bit	Off/On	Hex	Decimal	Function
0, 1	Off	00	0	Reserved.
2	Off	00	0	Double-width canceled.
	On	04	4	Double-width selected.
3	Off	00	0	Double-height canceled.
	On	08	8	Double-height selected.
4 - 6	Off	00	0	Reserved.
7	Off	00	0	Kanji-underline mode is turned off.
	On	80	128	Kanji-underline mode is turned on.

FS &

[Name] Select Kanji character mode

[Format]

ASCII	FS	&
Hex	1C	26
Decimal	28	38

[Description]
- Selects Kanji character mode.

FS – *n*

[Name] Turn underline mode on/off for Kanji characters

[Format]

ASCII	FS	–	*n*
Hex	1C	2D	*n*
Decimal	28	45	*n*

[Range] $0 \le n \le 2$, $48 \le n \le 50$

[Default] $n = 0$

[Description]
- Turns on or off underline mode for multi-byte code character (Kanji-underline).

n	Function
0, 48	Turns off Kanji-underline mode.
1, 49	Turns on Kanji-underline mode, set at 1-dot width.
2, 50	Turns on Kanji-underline mode, set at 2-dot width.

FS .

[Name] Cancel Kanji character mode

[Format]

ASCII	FS	.
Hex	1C	2E
Decimal	28	46

[Description]
- Cancels Kanji character mode.

FS 2 *c1 c2 d1...dk*

[Name] Define user-defined Kanji characters

[Format]

ASCII	FS	2	*c1*	*c2*	*d1...dk*
Hex	1C	32	*c1*	*c2*	*d1...dk*
Decimal	28	50	*c1*	*c2*	*d1...dk*

[Range] The ranges of *c1* and *c2* differ, depending on the models and the character code system used.

Model	Hexadecimal	
	c1	*c2*
Japanese (JIS code)	*c1* = 77	$21 \le c2 \le 7E$
Japanese (SHIFT JIS code)	*c1* = EC	$40 \le c2 \le 7E$ $80 \le c2 \le 9E$
Simplified Chinese (GB18030) Traditional Chinese	*c1* = FE	$A1 \le c2 \le FE$

$0 \le d \le 255$
$k = 72$

[Description]
- Defines the user-defined Kanji character pattern (*d1...dk*) specified by the character codes (*c1* and *c2*).

FS C *n*

[Name] Select Kanji character code system

[Format]

ASCII	FS	C	*n*
Hex	1C	43	*n*
Decimal	28	67	*n*

[Range] *n* = 0, 1, 48, 49

[Default] *n* = 0

[Description]
- Selects a Kanji character code system for the Japanese model.

n	Kanji character code system
0, 48	JIS code
1, 49	SHIFT JIS code

FS S *n1 n2*

[Name] Set Kanji character spacing

[Format]

ASCII	FS	S	*n1*	*n2*
Hex	1C	53	*n1*	*n2*
Decimal	28	83	*n1*	*n2*

[Range] $0 \le n1 \le 255$
$0 \le n2 \le 255$

[Default] *n1* = 0, *n2* = 0

[Description]
- Sets the left-side character spacing of the multi-byte code character to [*n1* × (horizontal or vertical motion unit)]; sets the right-side character spacing of the multi-byte code character to [*n2* × (horizontal or vertical motion unit)].

[Note]
- The maximum of the left- and the right-side character spacing is 35.98 mm {255/180"} respectively.

FS W *n*

[Name] Turn quadruple-size mode on/off for Kanji characters

[Format]

ASCII	FS	W	*n*
Hex	1C	57	*n*
Decimal	28	87	*n*

[Range] $0 \le n \le 255$

[Default] *n* = 0

[Description]
- Turns quadruple-size mode on or off for multi-byte code character.
  - When the LSB of *n* is 0, quadruple-size mode is turned off.
  - When the LSB of *n* is 1, quadruple-size mode is turned on.

6.5 Obsolete Commands

ESC i

[obsolete command]

GS V, which is the upward-compatible command replacing **ESC i**, is recommended to use, since **ESC i** is an obsolete command in the ESC/POS command system.

[Name]	Partial cut (one point left uncut)		
[Format]	ASCII	ESC	i
	Hex	1B	69
	Decimal	27	105
[Description]	• Executes a partial cut of the roll paper.		
[Note]	• This printer executes a partial cut (one point left uncut).		

ESC m

[obsolete command]

GS V, which is the upward-compatible command replacing **ESC m**, is recommended to use, since **ESC m** is an obsolete command in the ESC/POS command system.

[Name]	Partial cut (three points left uncut)		
[Format]	ASCII	ESC	m
	Hex	1B	6D
	Decimal	27	109
[Description]	• Executes a partial cut of the roll paper.		
[Note]	• This printer executes a partial cut (one point left uncut).		

ESC u *n*

[obsolete command]

GS r, which is the upward-compatible command replacing **ESC u**, is recommended to use, since **ESC u** is an obsolete command in the ESC/POS command system.

[Name] Transmit peripheral device status

[Format]

ASCII	ESC	u	*n*
Hex	1B	75	*n*
Decimal	27	117	*n*

[Range] *n* = 0, 48

[Description]
- Transmits the peripheral device status as 1 byte of data, as follows.

Bit	Off/On	Hex	Decimal	Status
0	Off	00	0	Drawer kick-out connector pin 3 is LOW.
	On	01	1	Drawer kick-out connector pin 3 is HIGH.
1 - 3	--	--	--	Reserved.
4	Off	00	0	Fixed.
5, 6	--	--	--	Reserved.
7	Off	00	0	Fixed.

[Note]
- When this command is transmitted, do not transmit the subsequent data until the status is received.

ESC v

[obsolete command]

GS r, which is the upward-compatible command replacing **ESC v**, is recommended to use, since **ESC v** is an obsolete command in the ESC/POS command system.

[Name] Transmit paper sensor status

[Format]

ASCII	ESC	v
Hex	1B	76
Decimal	27	118

[Description]
- Transmits the status of paper sensor(s) as 1 byte of data, as follows:

Bit	Off/On	Hex	Decimal	Status
0, 1	Off	00	0	Roll paper near-end sensor: paper adequate.
	On	03	3	Roll paper near-end sensor: paper near end.
2, 3	Off	00	0	Roll paper end sensor: paper present.
	On	0C	12	Roll paper end sensor: paper not present.
4	Off	00	0	Fixed.
5, 6	--	--	--	Reserved.
7	Off	00	0	Fixed.

Bits 2 and 3: While the cover is open, this shows the state when the cover was still closed. (This command is not executed.)

[Note]
- When this command is transmitted, do not transmit the subsequent data until the status is received.

FS p *n m* [obsolete command]

GS (L <Function 69>, which is the upward-compatible command replacing **FS p**, is recommended to use, since **FS p** is an obsolete command in the ESC/POS command system.

[Name] Print NV bit image

[Format]

ASCII	FS	p	*n*	*m*
Hex	1C	70	*n*	*m*
Decimal	28	112	*n*	*m*

[Range] $1 \le n \le 255$
$0 \le m \le 3$, $48 \le m \le 51$

[Description]
- Prints NV bit image *n* using the process of **FS q** and using the mode specified by *m*.

m	Mode	Vertical direction	Horizontal direction
0, 48	Normal	180 dpi	180 dpi
1, 49	Double-width	180 dpi	90 dpi
2, 50	Double-height	90 dpi	180 dpi
3, 51	Quadruple	90 dpi	90 dpi

FS q *n [xL xH yL yH d1...dk]1 ... [xL xH yL yH d1...dk]n* [obsolete command]

GS (L <Function 67>, which is the upward-compatible command replacing **FS q**, is recommended to use, since **FS q** is an obsolete command in the ESC/POS command system.

[Name] Define NV bit image

[Format]

ASCII	FS	q	*n*	*[xL xH yL yH d1...dk]1...[xL xH yL yH d1...dk]n*
Hex	1C	71	*n*	*[xL xH yL yH d1...dk]1...[xL xH yL yH d1...dk]n*
Decimal	28	113	*n*	*[xL xH yL yH d1...dk]1...[xL xH yL yH d1...dk]n*

[Range]
$1 \le n \le 255$
$1 \le (x_L + x_H \times 256) \le 1023$ $(0 \le x_L \le 255, 0 \le x_H \le 3)$
$1 \le (y_L + y_H \times 256) \le 288$ $(0 \le y_L \le 255, y_H = 0,1)$
$0 \le d \le 255$
$k = (x_L + x_H \times 256) \times (y_L + y_H \times 256) \times 8$
The entire capacity size = 256 KB.

[Description]
- Defines the NV bit image in the NV graphics area.
  - *n* specifies the number of defined NV bit images.
  - x_L, x_H specify the number of bytes in the horizontal direction as $(x_L + x_H \times 256)$.
  - y_L, y_H specify the number of bytes in the vertical direction as $(y_L + y_H \times 256)$.
  - *d* specifies the defined data (column format).

[Notes]
- Frequent write command executions by an NV memory write command may damage the NV memory. Therefore, it is recommended to limit writing the commands into the NV memory to less than 10 times a day.
- If the power is turned off or the printer is reset via an interface while this command is being executed, the printer may go into an abnormal condition. Do not turn the power off or do not reset the printer via an interface while this command is being executed.
- While processing this command, the printer may become BUSY while writing data to the NV memory and stops receiving data. Therefore, do not to transmit data from the host computer while the printer is BUSY.
- The printer executes a software reset after processing this command.
  - Clears the receive and print buffers.
  - Resets all setting values in RAM (the print area, the character styles, user-defined characters, and others) that were in effect at power on. (The data in the NV memory are not reset.)
- NV bit image and NV graphics (**GS (L/ GS 8 L**) cannot be defined simultaneously. When this command is executed, all NV graphics are deleted.

GS v 0 m *xL xH yL yH d1...dk* [obsolete command]

GS (L <Function 112 and 50>, which is the upward-compatible command replacing **GS v 0**, is recommended to use, since **GS v 0** is an obsolete command in the ESC/POS command system.

[Name] Print raster bit image

[Format]

ASCII	GS	v	0	*m*	x_L	x_H	y_L	y_H	*d1...dk*
Hex	1D	76	30	*m*	x_L	x_H	y_L	y_H	*d1...dk*
Decimal	29	118	48	*m*	x_L	x_H	y_L	y_H	*d1...dk*

[Range]
$0 \le m \le 3,\ 48 \le m \le 51$
$1 \le (x_L + x_H \times 256) \le 65535 \quad (0 \le x_L \le 255,\ 0 \le x_H \le 255)$
$1 \le (y_L + y_H \times 256) \le 2303 \quad (0 \le y_L \le 255,\ 0 \le y_H \le 8)$
$0 \le d \le 255$
$k = (x_L + x_H \times 256) \times (y_L + y_H \times 256)$

[Description]
- Prints a raster bit image using the mode specified by *m*.

m	Mode	Vertical direction	Horizontal direction
0, 48	Normal	180 dpi	180 dpi
1, 49	Double-width	180 dpi	90 dpi
2, 50	Double-height	90 dpi	180 dpi
3, 51	Quadruple	90 dpi	90 dpi

- x_L, x_H specify the number of bytes in the horizontal direction as $(x_L + x_H \times 256)$.
- y_L, y_H specify the number of dots in the vertical direction as $(y_L + y_H \times 256)$.
- *d* specifies the defined data (raster format).

APPENDIX A: MISCELLANEOUS NOTES

A.1 Notes on Printing and Paper Feeding

1) Because the TM-T88IV printer is a line printer, it automatically feeds paper after printing data. Therefore, when the line spacing for one line is set to a smaller value than the print data, paper may be fed more than the set amount just to print the data.
   For example, when the line spacing for one line is set to 10 dots (10/180 inches) and only paper feeding is executed, paper is fed for 10 dots; however, if bit-image characters are printed, paper is fed for 24 dots. (See Table A.1.)
   When only rotated characters are printed on one line, paper feeding is executed as shown in Table A.1.

Table A.1 Paper Feeding Amount

		Required Paper Feeding Amount (dots)
Normal Characters	Font A	24 × number of times enlarged vertically
	Font B	17 × number of times enlarged vertically
	Kanji font	24 × number of times enlarged vertically
Rotated Characters	Font A	12 × number of times enlarged vertically
	Font B	9 × number of times enlarged vertically
	Kanji font	24 × number of times enlarged vertically
Bit image (**ESC ∗**)		24

2) When the printer goes to the standby (data-waiting) state during printing, it temporarily stops printing and feeding paper. When data is transmitted and printing is executed, paper may shift 1 to 3 dots from the print starting position, which especially affects bit-image printing.

3) It is recommended to run the auto cutter operation after a minimum of 10 lines of printing or paper feeding to prevent small pieces of cut paper from dropping into the auto cutter to cause paper jams.

A.2 Notes on Installation

- Connect the external power supply to the power supply connector of the printer. Then plug in the external power supply and turn it on if necessary. Be sure not to connect the external power supply with the wrong polarity. If it is connected incorrectly, the internal circuit fuse of the printer may be blown or the external power supply may be damaged.
- Be sure that the power supply voltage is within the range of 24 V ± 7%. If the power supply voltage goes outside of the range above during printing, the printer stops printing and waits until the voltage returns to normal and then automatically resumes printing. If the voltage does not return to normal, an error occurs. As stopping of printing may occur, the print pitch may not be correct, and some dots in some characters may not be printed.
- In both high and low voltage errors, the ERROR LED indicator flashes.
- When either a high or low voltage error occurs, turn the power off as soon as possible.

A.3 Notes on use environment

Using in the presence of silicon gas (silicon adhesive, silicon oil, silicon powder, etc.) including siloxane and of malignant gas (nitric acid, hydrosulfuric, ammonia, chlorine, etc.) may cause contact failure at contact points in a mechanical switch and a DC motor etc. in a short time because of adhesion or oxidization of the insulation film.

A.4 Other Notes

1) Printer mechanism handling

- Do not pull the paper out when the roll paper cover is closed.
- Because the thermal elements of the print head and driver IC are easy to break, do not touch them with any metal objects.
- Since the areas around the print head become very hot during and immediately after printing, do not touch them.
- Do not open the roll paper cover during printing operation or the printing mechanism may become damaged.
- Do not touch the surface of the print head because dust and dirt can stick to the surface and damage the elements.
- Thermal paper containing Na^+, K^+, and Cl^- ions can harm the print head thermal elements. Be sure to use only the specified paper.
- Label paper cannot be used.

2) Notes on handling thermal paper

①Notes on using thermal paper

Chemicals and oil on thermal paper may cause discoloration and faded printing. Therefore, pay attention to the following:

a) Use water paste, starch paste, polyvinyl paste, or CMC paste when gluing thermal paper.
b) Volatile organic solvents such as alcohol, ester, and ketone can cause discoloration.
c) Some adhesive tapes may cause discoloration or faded printing.
d) If thermal paper touches anything that includes phthalic acid ester plasticizer for a long time, it can reduce the image-formation ability of the paper and can cause the printed image to fade. Wwhen storing thermal paper in a card case or sample notebook, therefore, be sure to use only products made of polyethylene, polypropylene, or polyester.
e) If thermal paper touches diazo copy paper immediately after copying, the printed surface may be discolored.
f) Thermal paper must not be stored with the printed surfaces against each other because the printing may be transferred between the surfaces.
g) If the surface of thermal paper is scratched with a hard metal object such as a nail, the paper may become discolored.

②Notes on thermal paper storage

Since color development begins approximately at 70°C {158°F}, thermal paper should be protected from high temperature, humidity, and light, both before and after printing.

a) Store paper away from high temperature and humidity.
Do not store thermal paper near a heater or in enclosed places exposed to direct sunlight.
b) Avoid direct sunlight.
Extended exposure to direct sunlight by the windows may cause discoloration or faded printing to the printed surface.

3) Others

- Because this printer uses plated steel, the cutting edges may be subject to rust. However, this does not affect the printer performance.

APPENDIX B: ROLL PAPER SETUP

B.1 Replacing the Roll Paper

1) Open the roll paper cover by pressing down the roll paper cover open button.
2) Load a roll of paper, and pull some of the paper from the roll paper out toward the front of the printer.
3) Close the roll paper cover.

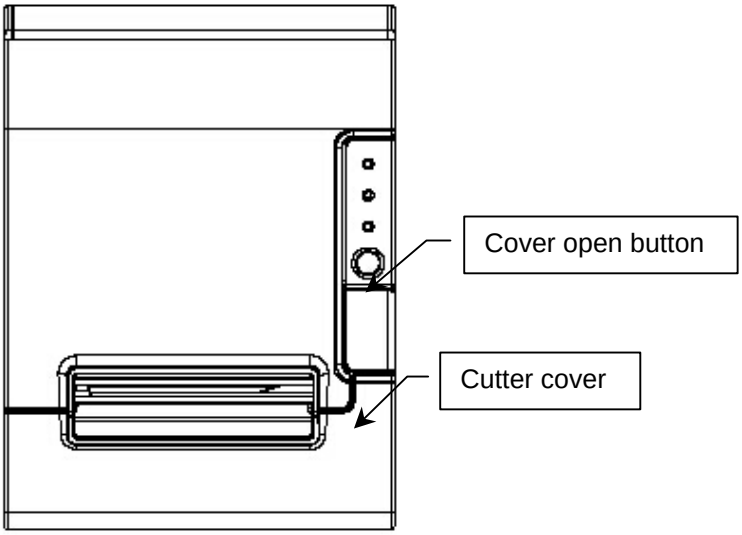

Figure B.1 Printer Upper Side Overview

APPENDIX C: RECOVERY FROM THE AUTO CUTTER ERROR

- If a foreign object such as a push pin or paper clip drops in the autocutter and causes the autocutter to lock up, the printer enters an error state and begins the recovery operation automatically. (Although the error LED indicator flashes continuously, the error is recoverable.)

  If the problem is not serious, the autocutter returns to its normal position without any intervention by the user.

  If the auto cutter does not return to its normal position by itself, follow the steps below to resolve the problem:

  1) Pull the cutter cover toward you so that you can rotate the cutter motor knob.
  2) Rotate the cutter motor knob in the direction shown by an arrow.
  3) Following the instructions on the caution label, rotate the knob until the triangular mark appears in the hole.

- If the motor knob does not rotate, rotate it in the reverse direction to loosen it; then send the **DLE ENQ *n*** command. Next, check the ERROR LED indicator. If the ERROR LED indicator is not off, repeat the same procedure and confirm that the ERROR LED indicator is off. When the ERROR LED indicator is off, the auto cutter blade has returned to its normal position and the roll paper cover can be opened. Open the roll paper cover, remove the jammed paper, and reinstall the roll paper. Then close the roll paper cover.

APPENDIX D: ADJUSTING THE ROLL PAPER NEAR-END SENSOR LOCATION

The remaining detectable amount of paper on the roll paper varies depending on the inside and outside diameters of the paper core. The minimum detectable amount of paper on the roll paper can be set using the following method:

1) Use roll paper with the inside diameter of the paper spool of 12 mm {0.47"} and the outside diameter of the paper spool of 18 mm {0.71"}. Use the specified thermal paper.
2) Loosen the adjusting screw that holds the paper near-end sensor and set the top of the positioning plate to the appropriate adjustment value and tighten the adjusting screw.

   Adjust the positioning plate to #1 if the outside diameter of a roll paper to be used is 18 mm.

   Adjust the positioning plate to #2 if the outside diameter of a roll paper to be used is more than 18 mm.

Table D.1 Adjustment Positions

Adjustment position number	Specified thermal paper dimension of A
#1	Approximately 23 mm {0.91"}
#2	Approximately 27 mm {1.06"}

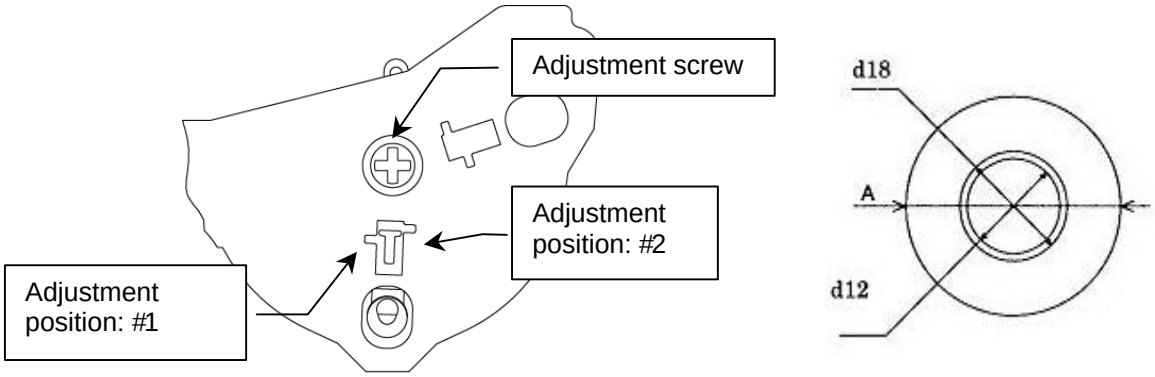

Figure D.1 Near-end Adjusting Position

NOTES:
1. Since dimension A in the table is a calculated value, there may be some variations depending on the printer.
2. Check that the adjustable slider operates smoothly after you finish the adjustment.
3. Change the roll paper near-end sensor position, in order to detect the paper near-end correctly when the printer is attached to a wall. (See Figure D.2 Changing the Near-end Sensor Position.)
   (1) Loosen the adjustment screw that is fixing the roll paper near-end sensor.
   (2) Push in the detection lever.
   (3) Turn the knob towards you until the detection lever clicks into place in the other hole.
   (4) While setting the knob by pressing the knob toward you, tighten the screw.

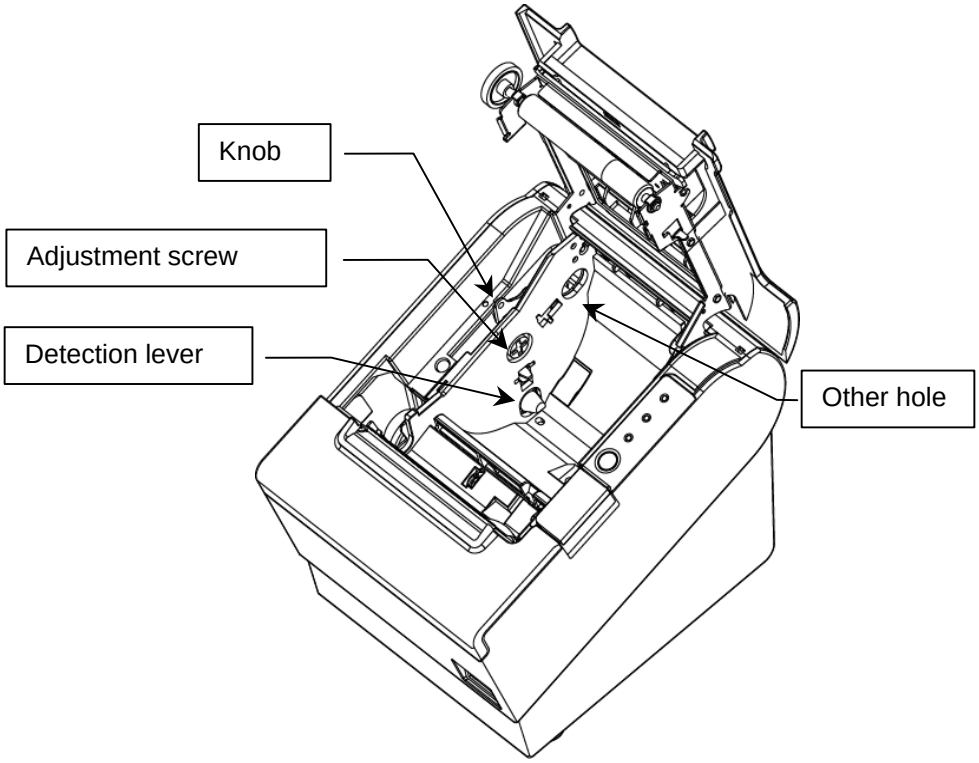

Figure D.2 Changing the Near-end Sensor Position

APPENDIX E: PRINT HEAD CLEANING

Paper dust or other foreign objects attached to the thermal elements may lower the print quality. In this case, clean the print head as follows:

1) Open the roll paper cover.

2) Clean the thermal elements of the print head using a cotton swab moistened with alcohol solvent (ethanol, methanol, IPA).

NOTES: 1. Do not touch the print head thermal elements.
2. Do not scratch the print head.

3) Insert roll paper, pull out some paper, and close the roll paper cover.

NOTE: The print head becomes very hot immediately after printing. Be sure to allow the print head to cool down (after printing) before cleaning it. Also, be sure to turn off the printer power before cleaning the print head. Turn on the printer power only after alcohol has completely dried.

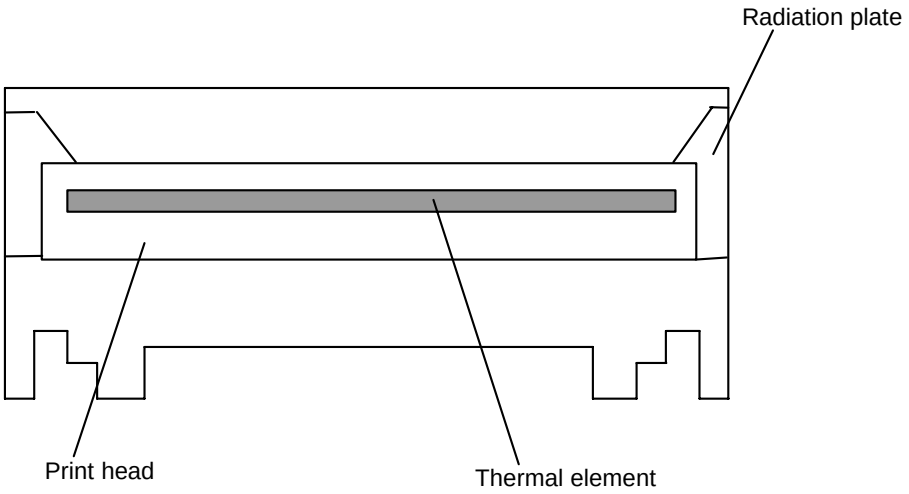

Figure E.1 Print Head Thermal Element

(*) Depending on the roll paper used, paper dust may stick to the platen roller and roll paper end sensor. To remove the paper dust, clean the platen roller and roll paper end sensor with a cotton swab moistened with water. Turn on the printer power only after the water has completely dried.

APPENDIX F: NOTES ON USING THE DRAWER KICK-OUT CONNECTOR

1) Drawer specifications (See Section 2.2.3, Drawer kick-out connector)

Drawer specifications differ significantly depending on manufacturer and model number. Make sure that the specifications of the drawer used meet the following conditions when connected to the drawer kick-out connector. These conditions also apply to any equipment (other than a drawer) that is connected to the drawer kick-out connector.

Never use a drawer (or other equipment) that does not meet all of the following conditions:

- The load, such as a drawer kick-out solenoid, must be connected between pins 4 and 2 or pins 4 and 5 of the drawer kick-out connector. (*1)
- When the drawer open/close signal (indicating the state of the drawer) is used, a switch must be provided between drawer kick-out connector pins 3 and 6. (*2)
- The resistance of the load, such as a drawer kick-out solenoid, must be 24 Ω or more or the input current must be 1A or less. (*3)
- Make sure to use the 24 V power output on drawer kick-out connector pin 4 for driving the equipment. Never connect any other power supply to the drawer kick-out connector. (*4) The peak current is 1 A. See item 2) below for drive signal duty.

NOTES: (*1): Proper operation is not guaranteed with different connections.

(*2): Proper operation is not guaranteed with different connections or connection to a component other than a switch.

(*3): Connection to equipment whose resistance is 24 Ω or less or whose input current is 1 A or more may damage the connected equipment as well as the printer.

(*4): Operation is not guaranteed with other power supplies.

2) Notes on the pulse generating command (**ESC p**)

When using **ESC p** to drive the drawer connected to the drawer kick-out connector, set the command parameters to meet the following conditions:

ESC p *m* *t1* *t2*

t2 → OFF time

t1 → ON time

$$\frac{\text{ON time}}{\text{ON time + OFF time}} \leq 0.2 \quad \text{.....Formula F-1}$$

$$\text{or, OFF time} \geq \text{ON time} \times 4 \quad \text{.....Formula F-2}$$

The drive signal waveform generated when the drawer is driven according to the above conditions is shown in Figure F-1.

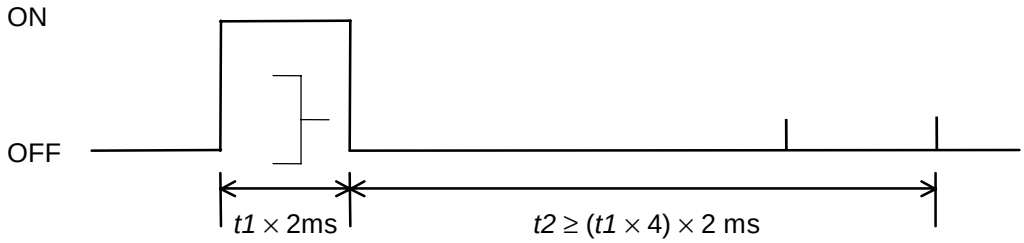

Figure F-1 Drawer Drive Signal Waveform (Formulas F-1 and F-2)

The ON time depends on the specifications of the drawer used. Be sure to check the drawer specifications and set a suitable time. To use a drawer that does not meet the conditions of Formulas F-1 and F-2, see the following section.

3) Using a drawer that does not meet the conditions in 2) (**ESC p**, **DLE DC4**)

① For **ESC p**

Setting the values of t1 and t2 according to the conditions in 2) results in a maximum ON time of 126 ms ($0 \le t1 \le 63$), since the setting ranges of *t1* and *t2* are 0 to 255. To use a drawer that requires an ON time exceeding 126 ms, the following conditions must be met:

$$\frac{\text{ON time}}{\text{ON time} + (\text{OFF time} + \alpha)} \le 0.2 \quad \text{.....Formula F-3}$$

α:other sequence processing time

NOTE: α is the drawer-driving prohibited period from the OFF time until the next ON time.

② For **DLE DC4**

Since **DLE DC4** sets ON time equals to OFF time, use α so that Formula F-3 is met.

An example program in which the drawer connected to drive signal 1 is driven with an ON time of 200 ms is shown below.

```
PRINT #1,CHR$(&H1B);"p";CHR$(0);CHR$(100);CHR$(250);
GOSUB *WAIT300MS
```

ON time 200 ms OFF time 500 ms

```
*WAIT300MS
  300 [ms] wait routine (*1)
RETURN
```

(*1) Corresponds to α of Formula F-3. Set the value so that it satisfies Formula F-3 (or include an internal processing time that is equal to or longer than this wait routine).

The drive signal waveform generated when the drawer is driven according to the above conditions is shown in Figure F-2.

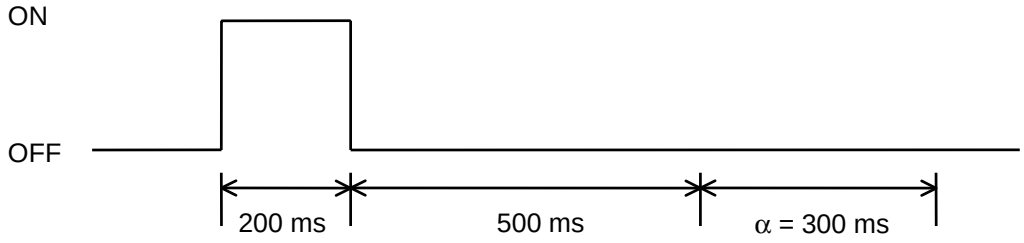

Figure F-2 Drawer Drive Signal Waveform (Formula F-3)

APPENDIX G: NOTES ON UPDATING THE MAINTENANCE COUNTER AND TURNING THE PRINTER'S POWER OFF

G.1 About updating the maintenance counter

- This printer has a maintenance counters with functions as described in the command description for **GS g 0** and **GS g 2**.
- The values of the maintenance counter are automatically stored in the NV memory every 2 minutes (or 4 minutes maximum) when the printer is operating, except in the power save mode.
- However, if the power off is performed as described in Section G.2, the printer stores the latest values of the maintenance counter and executes the power off control, regardless of the updating interval described above.
- If the printer is not sending/receiving data or is not operating while the power is turned on, the printer enters the power-saving mode.

G.2 Printer power off procedures

It is recommended to turn off the printer after executing the powering-off command **DLE DC4** (*fn* = 2).

The following is an example of the printer power off process when the printer is turned off using the **DLE DC4** (*fn* = 2) command.

1) The host computer transmits the following continuous procedure before the system is turned off:
   ①Executes **GS (D *pL pH m a b*** (*pL*=3, *pH* =0, *m* =20, *a* =2, *b* =1)
   ②Executes **GS r *n*** (*n* =1)
2) The host computer waits for the paper sensor status sent from the printer in response to the **GS r *n*** command.
3) The host computer transmits **DLE DC4 *fn a b*** (*fn* =2, *a* =1, *b* =8).
4) The host computer waits for the power off status.
   - The values of the maintenance counter are stored and the power-off sequence is performed within 20 seconds after the host computer transmits **DLE DC4 *fn a b***; then the power off status is transmitted.
   - With the USB interface model, the printer is required to be ready to receive data from the host computer.
   - With the serial interface model, the printer status is transmitted regardless of the condition of the host computer.
   - With the parallel interface model, the host computer is required to be ready to operate negotiation immediately after transmitting **DLE DC4 *fn a b*** so that the host computer can receive the printer status.
   - If the power off status is not confirmed, wait for at least 20 seconds after transmitting **DLE DE4 *fn a b***.

   NOTE: The printer executes the software sequence, but the power is not cut.

5) Power off the host computer and the printer.

   NOTE: Do not reset the printer until the printer power is turned off after transmitting **DLE DC4** (*fn* = 2).

APPENDIX H: NOTES ON PRINTING 2-DIMENSIONAL CODE

The TM-T88IV supports 2-dimensional code printing.
Be sure to follow the notes below when printing 2-dimensional codes.

1) When printing PDF417 (2-dimensional code), it is recommended to set the height of one step of the symbol to three to five times the width of one module, and the total height should be approximately 5 mm {0.20"} or more.

2) The recognition rate of the 2-dimensional code may vary depending on widths of the modules, print density, environmental temperature, type of the thermal paper, and characteristics of the reader. Therefore, user must check the recognition rate before setting the use conditions so that the restrictions of the reader are satisfied.

APPENDIX I: NOTES ON SCANNING THE PRINT RESULT ON THE RECEIPT

Take a consideration as described below to determine whether the ability of the reader (scanner) can be satisfied when the print results on the receipt, such as bar codes, 2-dimensional codes, or characters.

1) Print density

The print density may vary depending on the type of roll paper or the environmental conditions.

2) Slant of the print result

The print result may be slant slightly as shown in Figure I-1. The slant angle of the print result is within ± 1.6° and it varies while printing or each receipt issue.

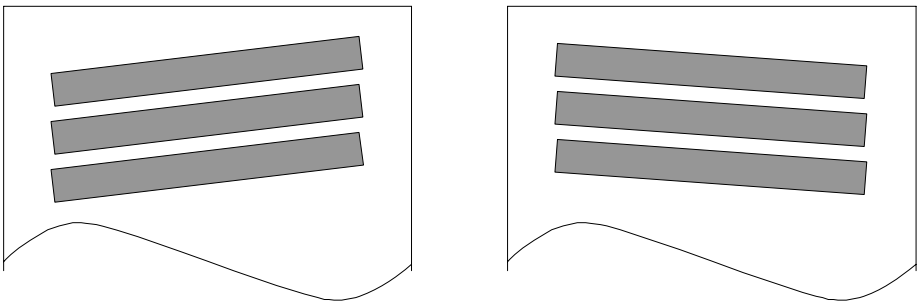

Figure I-1 Slant of the Print

NOTE: If paper other than the ones described in Section 1.5 Paper Specification is used or if the paper is used out of the range described in Section 1.12 Environmental conditions, the print density may vary or the slant of print result may become wider.

APPENDIX J: NOTES ON USING THE ASB STATUS

While the host computer is in the BUSY status, transmission of all the data including ASB is suspended. Any accumulated ASB status signals left for transmission from the last to the newest ASB status transmission is transmitted together at a time as (a) “one ASB status showing the presence of change”, followed by (b) “the latest ASB status”.

Example: In the normal (wait) state, the ASB status is configured as follows.

First Status	Second Status	Third Status	Fourth Status
0001 0100	0000 0000	0000 0000	0000 1111

When a sequence of operations as follows are performed and the printer status changes, the accumulated ASB is transmitted in order if the host computer is in the READY status.

	First Status	Second Status	Third Status	Fourth Status	
1	0011 1100	0000 0000	0000 0000	0000 1111	The printer cover is opened.
2	0001 1100	0000 0000	0000 1111	0000 1111	The printer cover is closed.
3	0011 1100	0000 0000	0000 1111	0000 1111	The printer cover is opened.
4	0001 1100	0000 0000	0000 1111	0000 1111	The printer cover is closed.

If the status changes of “1” to “4” occur while the host computer is in the BUSY status, the printer transmits a total of 8 bytes of ASB shown below when the host computer returns to the READY status.

	First Status	Second Status	Third Status	Fourth Status
(a) Accumulated ASB (1+2+3+4)	0011 1100	0000 0000	0000 0000	0000 1111
+	First Status	Second Status	Third Status	Fourth Status
(b) The latest ASB Fourth Status	0001 1100	0000 0000	0000 1111	0000 1111

APPENDIX K: COMPARISON BETWEEN TM-T88Ⅳ AND TM-T88III (EXCEPT COMMANDS)

	TM-T88Ⅳ	TM-T88III
1. Print speed → See APPENDIX M for details.	<High speed mode> 200 mm/s maximum <Low power consumption mode> 150 mm/s maximum	<High speed mode> 150 mm/s maximum <Low power consumption mode> 70 mm/s maximum
2. High speed graphic printing	200 mm/s maximum	---
3. Two-color printing	Possible by the setting	---
4. Multilingual support <Japanese> <Traditional Chinese>	 JIS (JISX0208-1990) 6879 characters Special font 845 characters 13535 characters (41 characters of 0xF9D6 – 0xF9FE that are defined by Big-5E are added.)	 JIS (JISX0208-1990) 6879 characters 13494 characters
5. Font structure	The font structure of the following characters differs Font A (seven characters): 2, 3, 4, 5, 6, 7, 9 Font B (three characters): 2, 6, 9	---
6. Page mode area	<Single-color paper> Horizontal: 512 dots Vertical: 1662 dots (max.) <Two-color paper> Horizontal: 512 dots Vertical: 831 dots (max.)	Horizontal: 512 dots Vertical: 831 dots (max.)
7. Hexadecimal dumping	When hexadecimal dumping is ended by pressing the FEED button three times, the printer cuts paper, with one point left uncut.	When hexadecimal dumping is ended by pressing the FEED button three times, the printer does not execute a partial cut.
8. Power consumption	<High speed mode> Mean: Approximutely 1.8 A Peak: Approximately 6.1 A <Low power consumption> Mean: Approximately 1.1 A Peak: Approximately 3.5 A <Standby> Mean: Approximately 0.1 A	<High speed mode> Mean: Approximutely 1.8 A Peak: Approximately 7.7 A <Low power consumption> Mean: Approximately 1.2 A Peak: Approximately 6.6 A <Standby> Mean: Approximately 0.2 A
9. Selection of transmission speed of serial interface	2400, 4800, 9600, 19200, 38400, 57600, 115200 bps (Set with DIP switch or **GS (E.**)	4800, 9600, 19200, 38400 bps (Set with DIP switch.)

	TM-T88IV	TM-T88III
10. Customized value	The customized value can be set with **GS (E**: • Print density • Print speed • Number of head energization • Print control (signal or two-color) • Print density level of the black color in two-color printing	---
11. Number of head energization	One-/two-/four- enegization can be selected.	Fixed to two-energization.
12. Low power consumption mode (See APPENDIX M for details.)	Depending on the condition of the command or the print duty, the printer controls the print speed or the number of the head energization to save power.	The print speed is limitted to 70 mm/s maximum to save power consumption.
13. UB series interface support	UB-U05, U06, U19 can be used. (These are USB interfaces.)	The UB series interface listed in the left column cannot be used.
14. Limitation to the functions when using UB series interface	The UB series interface that supports the buzzer function cannot be used.	A buzzer function can be operated.
15. Error detection in the standby status	When the printer is in the standby status, the following detections are not be performed: • Low voltage error • High voltage error • Detection of paper presence • Near-end paper detection NOTE: The standby status means when no data is transmitted or received, or when no operation is run while the power is turned on. In the standby status, the printer goes into the power-saving mode.	Detects in the standby status.

APPENDIX L: COMPARISON TABLE BETWEEN TM-T88IV AND TM-T88III (COMMANDS)

COMMAND	TM-T88IV	TM-T88III
DLE DC4 (***fn***=2)	Newly supported.	---
DLE DC4 (***fn***=8)	Newly supported.	---
ESC ∗	Maximum size in horizontal direction: 2048 dots	Maximum size in horizontal direction: 1024 dots
ESC = *n*	[Range] $0 \le n \le 3$	[Range] $0 \le n \le 255$
ESC R	Supported by all models.	***n***=14,15 is supported only in Simplified Chinese model.
ESC V	[Range] $0 \le n \le 2$, $48 \le n \le 50$	[Range] n = 0, 1, 48, 49
ESC W	Maximum length in vertical direction: • Single-color print control: 234.53 mm {3324/360"} • Two-color print control: 117.26 mm {1662/360"}	Maximum length in vertical direction: • 117.26 mm {1662/360"}
ESC t	--- (Supported by another specification model.)	Thai font is supported: $20 \le n \le 26$
GS (D	Newly supported.	---
GS (E	Newly supported.	---
GS (H	Newly supported.	---
GS (K	Newly supported.	---
GS (L/ GS 8 L	Newly supported.	---
GS (N	Newly supported.	---
GS (k	Newly supported.	---
GS I	[Range] n = 1, 2, 49, 50, $65 \le n \le 69$ Product name: "TM-T88IV"	[Range] $1 \le n \le 3$, $49 \le n \le 51$, $65 \le n \le 69$ Product name: "TM-T88III"
GS V	[Range] <A> m = 0, 1, 48, 49 <B> m = 65, 66, $0 \le n \le 255$	[Range] <A> m = 1, 49 <B> m = 66, $0 \le n \le 255$
GS g0	Newly supported.	---
GS g2	Newly supported.	---
GS k	Addition of process data of CODEBAR: $97 \le d \le 100$ [Where $65 \le d1 \le 68$, $65 \le dk \le 68$, $97 \le d1 \le 100$, $97 \le dk \le 100$]	---
FS 2	--- (Supported by another specification model.)	There is the Korean model.
FS p	Even if the FEED button is pressed while the NV bit image is being printed, the print may be not stopped on the way.	If the FEED button is pressed while the NV bit image is being printed, the print may be stopped on the way.

APPENDIX M: LOW POWER CONSUMPTION MODE

In order to save power consumption, this printer supports the special low power consumption mode (4-divided energization). The 4-divided energization printing method is activated by setting the DIP switch 2-3 and 2-4. (See Table 3.3.4.)

The printer automatically chooses the printing method, depending on the print data types.

Print data type	Printing method	
	Low power consumption mode	Normal power consumption mode
Bit image (**ESC ∗**)	Max. 60 mm/sec 4-divided energization	Max. 200 mm/sec
Downloaded bit image (**GS *l***)		
NV bit image (**FS p**)		
Page mode (**FF**, **ESC FF**)		
Ladder bar code part in page mode	Max. 60 mm/sec 4-divided energization	Fixed to 100 mm/sec
Raster bit image (**GS v 0**)		Fixed to 200 mm/sec
One line data in standard mode that contains more than 168 dots of specific high duty characters (*1)	Max. 60 mm/sec 4-divided energization	Max. 200 mm/sec
NV graphics (Function 69 **GS (L**)	Max. 60 mm/sec 4-divided energization	Max. 200 mm/sec
Raster bit image (Function 50 **GS (L**)	Max. 60 mm/sec 4-divided energization	Max. 200 mm/sec
Other data	Max. 150 mm/sec 2-divided energization	Max. 200 mm/sec

(*1) High duty characters are listed below:

- Character code <DB>H, <DC>H, <DD>H, <DE>H, <DF>H and <FE>H
- White/black reverse printing characters
- User-defined characters
- Space pages
- User-defined Kanji characters

APPENDIX N: REDUCED DOT PATTERN FONT

In order to save power consumption during standard mode printing, this printer has a reduced dot pattern font for some characters listed below:

Code page 0: <DB>H, <DC>H, <DF>H and <FE>H
Code page 1: <81>H, <82>H, <83>H, <84>H, <85>H, <86>H and <87>H
Code page 1: <8B>H, <8C>H, <8D>H and <8E>H