M|P|W

Physics A (H156, H556)

Chapter 9 TA
The Physics Department

Please note that you may see slight differences between this paper and the original.

Candidates answer on the Question paper.

OCR supplied materials:
Additional resources may be supplied with this paper.

Other materials required:
- Pencil
- Ruler (cm/mm)

Duration: 45 mins

INSTRUCTIONS TO CANDIDATES

- Write your name, centre number and candidate number in the boxes above. Please write clearly and in capital letters.
- Use black ink. HB pencil may be used for graphs and diagrams only.
- Answer **all** the questions, unless your teacher tells you otherwise.
- Read each question carefully. Make sure you know what you have to do before starting your answer.
- Where space is provided below the question, please write your answer there.
- You may use additional paper, or a specific Answer sheet if one is provided, but you must clearly show your candidate number, centre number and question number(s).

INFORMATION FOR CANDIDATES

- The quality of written communication is assessed in questions marked with either a pencil or an asterisk. In History and Geography a *Quality of extended response* question is marked with an asterisk, while a pencil is used for questions in which *Spelling, punctuation and grammar and the use of specialist terminology* is assessed.
- The number of marks is given in brackets **[ ]** at the end of each question or part question.
- The total number of marks for this paper is **39**.
- The total number of marks may take into account some 'either/or' question choices.

© OCR 2024. You may photocopy this page.

Created in ExamBuilder

1 A student determines the resistance R of a filament lamp by measuring the potential difference V across it and the current I in it. The values recorded by the student are:

$V = (5.00 \pm 0.20)$ V and $I = (40.0 \pm 1.0)$ mA.

What is the percentage uncertainty in the value of R ?

A 1.5%
B 1.6%
C 6.5%
D 20%

Your answer

[1]

2 The graph shows the *I-V* characteristic of a semiconductor diode.

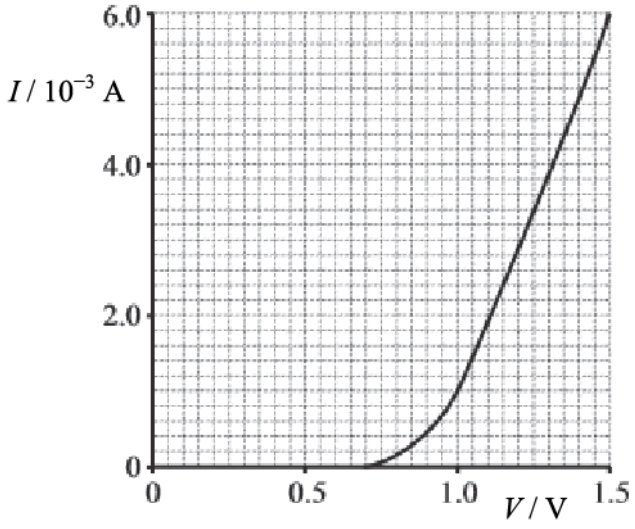

Which statement about the resistance of the diode can be deduced from the characteristic?

A It is zero between 0 V and 0.70 V.
B It is constant between 1.0 V and 1.5 V.
C It is 0.4 Ω at 1.2 V.
D It decreases between 0.70 V and 1.0 V.

Your answer ☐

[1]

3 An electron gun is used to accelerate electrons from rest through a voltage V. The electrons emerge with a speed u.

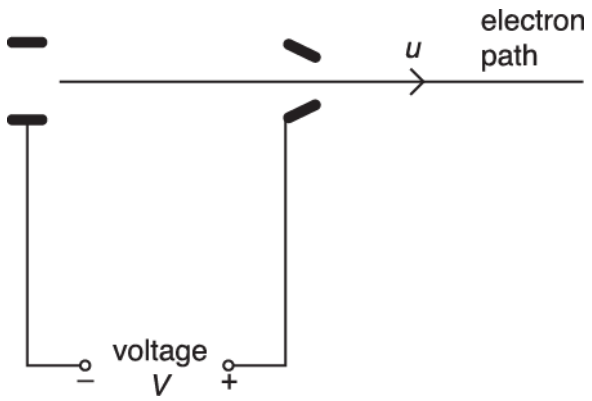

The voltage in the gun is halved to $\frac{V}{2}$. At what speed do the electrons emerge?

A $\frac{u}{4}$

B $\frac{u}{2}$

C $\frac{u}{\sqrt{2}}$

D $u\sqrt{2}$

Your answer

[1]

4 Wire **P** has length L, diameter d and a resistance of 1.00 Ω.
Another wire **Q** made from the same metal has length $3L$ and diameter $2d$.

What is the resistance of wire **Q**?

A 0.750Ω

B 1.00Ω

C 1.33Ω

D 1.50Ω

Your answer [1]

5 The resistance of a wire of length L is 3.00 Ω.
The wire is extended so that its length becomes $1.50L$. Its volume remains the same.

What is the resistance of the extended wire?

A 2.00 Ω

B 3.00 Ω

C 4.50 Ω

D 6.75 Ω

Your answer [1]

6 In a particle-accelerator electrons are accelerated through a potential difference of 120 kV. The electron beam current is 8.0 μA.

What is the total energy transferred to the electrons in a time of 2.0 hours?

A 0.96 J
B 120 J
C 1900 J
D 6900 J

Your answer [1]

7 Which of the following is **not** a source of electromotive force (e.m.f.)?

A chemical cell
B light-dependent resistor
C power supply
D solar cell

Your answer [1]

© OCR 2024. You may photocopy this page.

Created in ExamBuilder

8 A resistance wire is part of an electrical circuit, as shown below.

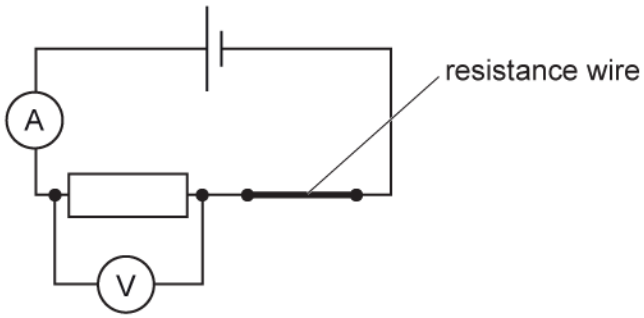

The resistance wire is pulled so that it becomes longer and thinner.

Which statement is correct?

A The ammeter reading increases.
B The resistance of the wire decreases.
C The total resistance of the circuit remains constant.
D The voltmeter reading decreases.

Your answer [1]

9 A cylinder of conducting material has length 6.0×10^{-2}m and diameter 2.0×10^{-2}m. It has resistance 24 Ω.

What is the resistivity of the material?

A 0.13 Ω m
B 0.50 Ω m
C 7.9 Ω m
D 25 Ω m

Your answer [1]

© OCR 2024. You may photocopy this page.

Created in ExamBuilder

10 The *I-V* characteristics of two components **R** and **L** are shown below.

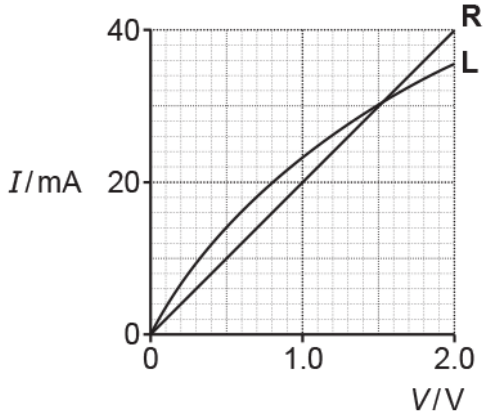

Which statement is correct?

A **R** and **L** are both filament lamps.

B **R** and **L** have the same resistance at 1.5 V.

C The resistance of **L** is independent of potential difference *V*.

D The resistance of **R** increases as the potential difference *V* increases.

Your answer ☐ **[1]**

11 What is the total energy *E* gained by *N* electrons travelling through a potential difference *V*?

A $E = N \times V$

B $E = V \times 10^{-19}$

C $E = V \times 1.60 \times 10^{-19}$

D $E = N \times V \times 1.60 \times 10^{-19}$

Your answer ☐ **[1]**

© OCR 2024. You may photocopy this page.

Created in ExamBuilder

12 A student investigates a conducting wire of constant cross-sectional area, at constant temperature.

The resistance R is measured for a range of lengths L.

The following graph is plotted:

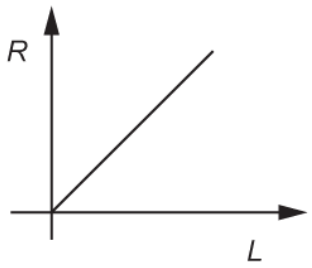

Which expression is equal to the gradient of the graph?

A resistivity

B resistivity × cross-sectional area

C $\dfrac{\text{resistivity}}{\text{cross-sectional area}}$

D $\dfrac{\text{cross-sectional area}}{\text{resistivity}}$

Your answer ☐ [1]

13 A tungsten filament lamp is connected in a circuit as shown.

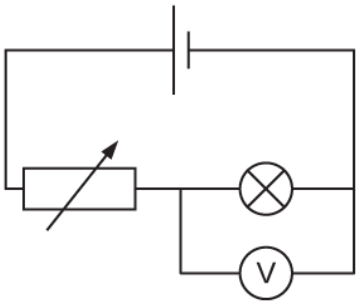

The variable resistor is adjusted so that the temperature of the filament lamp increases.

What happens to the resistance of the lamp and the reading on the voltmeter?

	resistance of the lamp	voltmeter reading
A	decreases	decreases
B	decreases	increases
C	increases	decreases
D	increases	increases

Your answer [1]

14(a) Fig. 24 shows a square wafer of semiconductor of length *L* and thickness *t*.

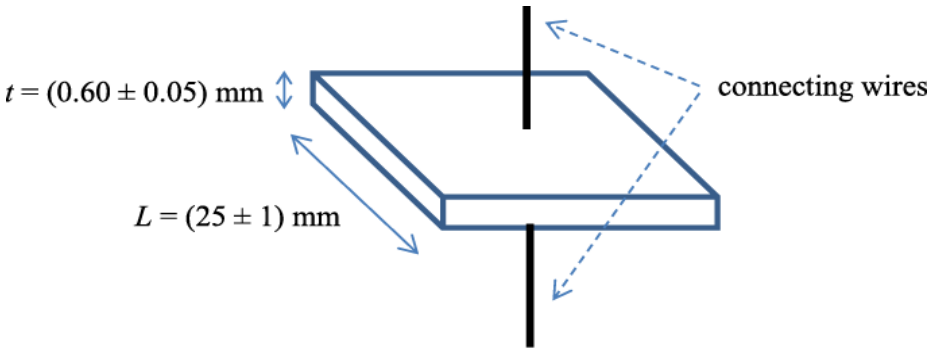

Fig. 24

The wafer is connected to a power supply. The current I in the wafer is 32 mA and the potential difference V across the wafer is 0.13 V.

(i) Show that the resistivity ρ of the semiconductor is given by the expression

$$\rho = \frac{VL^2}{It}$$

[2]

(ii) Calculate the resistivity ρ of the semiconductor.

ρ = _____ Ω m **[2]**

© OCR 2024. You may photocopy this page.

Created in ExamBuilder

(b) The ammeter reading increases when the circuit in the previous question part remains connected.

Use your knowledge of semiconductors to explain why.

---[2]

15 **Fig. 4.1** shows part of the *I* – *V* characteristic of a silicon diode.

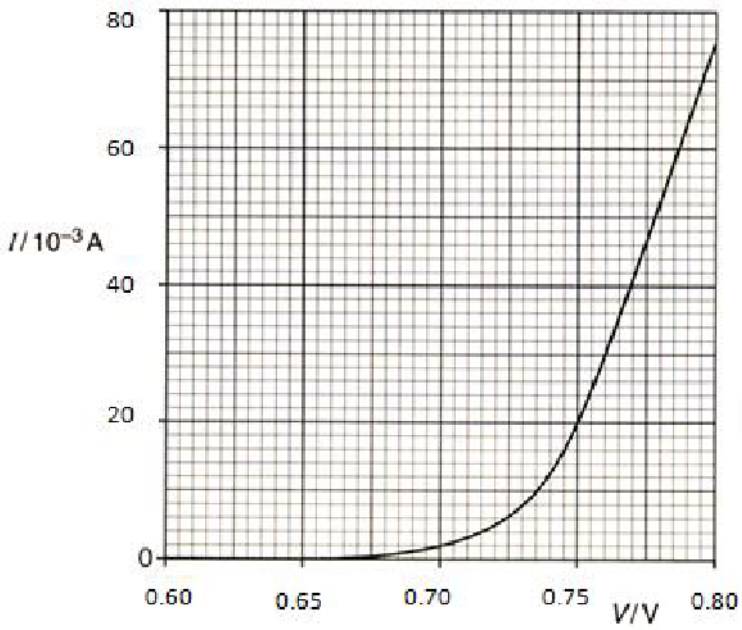

Fig. 4.1

The graph has three distinct regions, from 0.60 V to 0.65 V, 0.65 V to 0.75 V and above 0.75 V.

State and justify how the resistance of the diode increases, remains the same or decreases in each of these regions.

---

[5]

16 A metal such as copper is classified as a *conductor*. Graphite behaves as a *semiconductor*.

(i) Describe why the resistivity of copper is less than that of graphite.

[2]

(ii) State with a reason what effect an increase in temperature has on the electrical properties of each of these two types of material.

[2]

17 The unit of potential difference is the volt.

Use the equation $W = VQ$ to show that the volt may be written in base units as kg m^2 A^{-1} s^{-3}.

[3]

18(a) Fig. 6.1 shows the I–V characteristics for two electrical components X and Y.

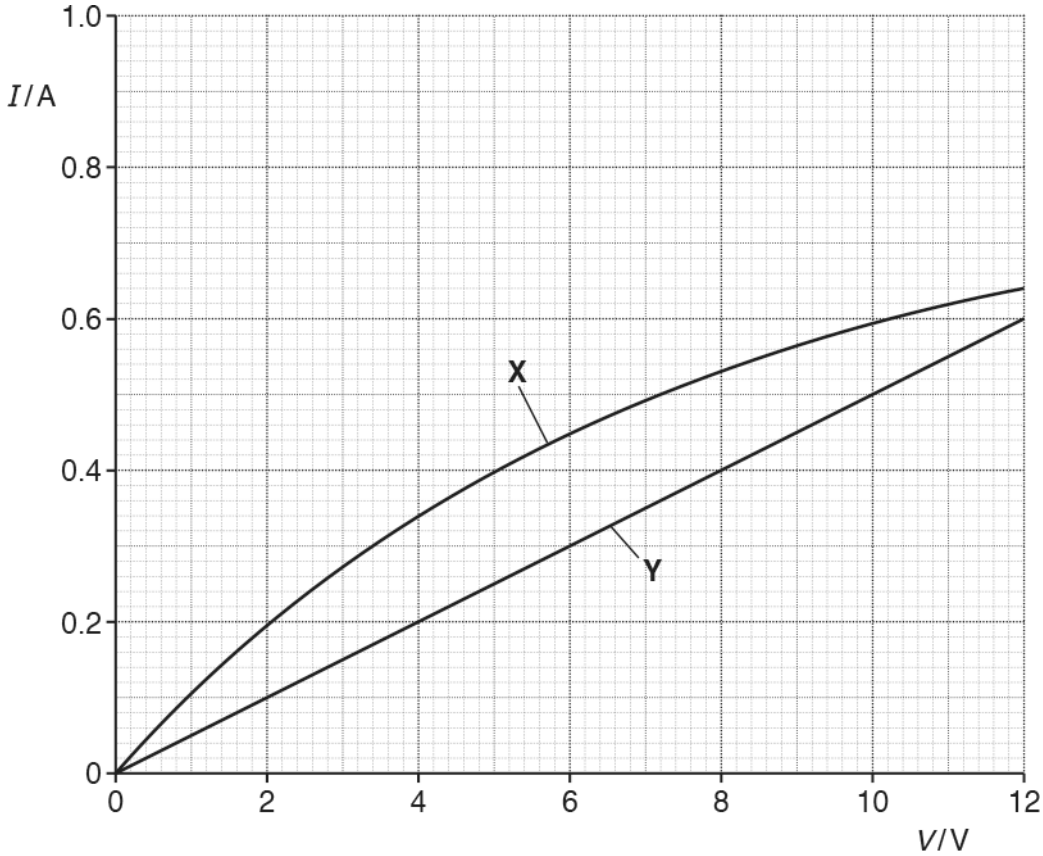

Fig. 6.1

Suggest the two components X and Y that were used.

Name of component X ----------

Name of component Y ---------- [1]

(b) A cable consists of 17 tightly packed copper wires, see Fig. 6.3.

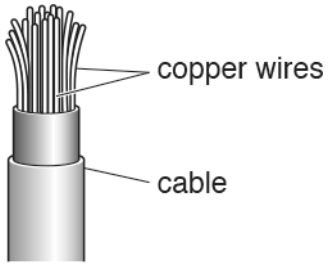

Fig. 6.3 (not to scale)

The student measures the diameter d of one of the copper wires as 0.12 ± 0.01 mm.

(i) Explain how the student should measure precisely the diameter of the wire.

--- [2]

The student measures the resistance R of the whole **cable** as 1.86 ± 0.02 Ω.

The length L of the cable is 21.0 ± 0.1 m.

(ii) Determine the resistivity ρ of copper.

ρ = ---------- Ω m [3]

(iii) Determine the percentage uncertainty in ρ.

percentage uncertainty = ---------- % **[2]**

END OF QUESTION PAPER

Question			Answer/Indicative content	Marks	Guidance
1			C	1	Examiner's Comments All of the questions showed a positive discrimination, and the less able candidates could access the easier questions. The questions in Section A do require careful reading and scrutiny. Candidates are advised to reflect carefully before recording their response in the box. Candidates must endeavour to use a variety of quick techniques when answering multiple choice questions. The candidates to demonstrate their knowledge and understanding of physics. Tested knowledge of how uncertainties compound when determining resistance of a filament lamp.
			Total	1	
2			D	1	
			Total	1	
3			C	1	Examiner's Comments All of the questions showed a positive discrimination, and the less able candidates could access the easier questions. The questions in Section A do require careful reading and scrutiny. Candidates are advised to reflect carefully before recording their response in the box. Candidates must endeavour to use a variety of quick techniques when answering multiple choice questions. The correct key was **C**. It was only the candidates in the upper quartile who managed to get the correct answer using the expression $Ve = \frac{1}{2}mv^2$ (learning outcome 4.2.2e). Halving the accelerating voltage V will decrease the speed of the electrons by a factor of $\sqrt{2}$.
			Total	1	

© OCR 2024. You may photocopy this page.

Created in ExamBuilder

Question			Answer/Indicative content	Marks	Guidance
4			A	1	
			Total	1	
5			D	1	<u>Examiner's Comments</u> This question was about the resistance equation $R = \frac{\rho L}{A}$ which appears in the Data, Formulae and Relationship Booklet. This was a good discriminator for the top-end candidates. The majority of the candidates opted for the answer C, which was simply 1.50 times the original resistance of the wire. The crucial statement that the 'volume of the wire remains the same' was omitted by most candidates. The volume of the wire remains constant. The cross-sectional area of the wire will decrease by a factor of 1.50 as its length increases by this same factor. Since resistance $R \propto \frac{L}{A}$, this implies that the resistance of the stretched wire will increase by a factor of 1.50^2. This makes the resistance of the extended wire equal to $1.50^2 \times 3.00 = 6.75\ \Omega$. The analysis above shows how it is easy to follow incorrect logic when a single pivotal statement in the question is skimmed over.
			Total	1	
6			D	1	
			Total	1	
7			B	1	
			Total	1	
8			D	1	
			Total	1	

© OCR 2024. You may photocopy this page.

Created in ExamBuilder

Question			Answer/Indicative content	Marks	Guidance
9			A	1	
			Total	1	
10			B	1	Examiner's Comments This question was generally answered well with candidates correctly using the *I–V* graph to determine that **R** and **L** had the same resistance when the two lines intersected at 1.5 V. The most common distractor was answer D.
			Total	1	
11			D	1	Examiner's Comments This question was generally answered well with candidates giving the correct answer D by selecting and applying the equation $W = VQ$ and that the charge of one electron is 1.60×10^{-19} C.
			Total	1	
12			C	1	Examiner's Comments This question was answered well as candidates were able to determine the correct expression for the gradient by applying the equation $R = \rho L/A$.
			Total	1	
13			D	1	Examiner's Comments This question was generally answered well with most candidates correctly determining that as the temperature of the filament lamp increased so did the resistance of the filament lamp. By applying $V = IR$ they then determined that the potential difference would also increase due to increased resistance. The most common distractor was C.
			Total	1	

© OCR 2024. You may photocopy this page.

Created in ExamBuilder

Question			Answer/Indicative content	Marks	Guidance
14	a	i	Manipulate R = V/I and R = ρ t / L^2	M1	
		i	Rearrangement	M1	
		ii	$0.13 \times (25 \times 10^{-3})^2 / 32 \times 10^{-3} \times 0.60 \times 10^{-3}$	C1	Watch for attention to units
		iii	= 4.2 Ω m	A1	
	b		Relate current to energy transfer / temperature increase	B1	AW
			More free electrons	B1	
			Total	6	
15			R (at any point) = V / I	B1	no mark if reference to slope / gradient of line
			0.6 – 0.65 V R = infinity	B1	
			0.65 – 0.75 V R decreases / falls	C1	
			to 0.75 /(20×10^{-3}) = 38 Ω	A1	
			0.75 – 0.80 V R decreases at a constant rate	B1	**or** falls to 11 Ω at 0.80 V or similar calculation **or** decreases at 54 ΩV^{-1}
			Total	5	

© OCR 2024. You may photocopy this page.

Created in ExamBuilder

Question			Answer/Indicative content	Marks	Guidance
16		i	reference to differences in number density of (free) electrons/charge carriers	B1	allow n, number per m^3 or unit volume
		i	conductors have n a (few) powers of 10 greater than semiconductors/AW	B1	**allow** much greater than
		ii			**allow** R or resistivity rises for conductors and falls for semiconductors for 1 mark
		ii	*conductor:* R or *ρ* rises because of (increase in) electron ion collisions/ v falls	B1	**allow** current decreases for same p.d. /AW
		ii	*semiconductor:* R or *ρ* falls because of (large) increase in n/free electrons	B1	**allow** current increases for same p.d. /AW **Examiner's Comments** The common answer to part (i) was that *there are more free electrons or charges*. The examiners were looking for any comparison of n or the number per unit volume. About half of the candidates failed to score a mark for part (ii) considering the resistance to increase with temperature for both copper and graphite. Ions were often described as atoms or particles in the metal. A minority gave very good answers to this question.
			Total	4	
17			(1 C =) (1) A s	C1	**Allow** alternative methods
			(1 J =) (1) kg m s^{-2} × m or (1) N = (1) kg m s^{-2}	C1	
			$V = \frac{\text{kg ms}^{-2} \times \text{m}}{\text{As}} = \frac{\text{kgm}^2\text{s}^{-2}}{\text{As}}$	M1	**Note** this mark is for clear substitution and working
			$\text{kg m}^2\text{A}^{-1}\text{s}^{-3}$	A0	**Examiner's Comments** Some candidates were not clear on what was meant by base units. Most realised that the quantity of electric charge is measured in As. Weaker candidates had difficulty deriving work done.
			Total	3	

© OCR 2024. You may photocopy this page.

Created in ExamBuilder

Question			Answer/Indicative content	Marks	Guidance
18	a		X (filament) lamp Y (fixed)(ohmic) resistor	 B1	**Allow** ptc thermistor / heater element **Not** metallic conductor Examiner's Comments Many candidates did not appear to recognise the *I-V* characteristics for a filament lamp or an ohmic resistor. Incorrect answers that were often seen included diodes and LDRs. X could have been a thermistor with a positive temperature coefficient (ptc) although the specification only makes reference to thermistors with negative temperature coefficients
	b	i	Micrometer Repeat readings in different directions/along wire/different wires and average	B1 B1	**Allow** calliper **Not** vernier scale Examiner's Comments Most candidates were able to identify a suitable measuring instrument such as a micrometer. To score the second mark candidates were expected to explain the purpose of repeating readings that the reading would be repeated in different directions or along the wire and the mean or average diameter would be determined. to assure that the outcome is precise.
		ii	$A = \frac{\pi \times (0.12 \times 10^{-3})^2}{4} = 1.13 \times 10^{-8}$ OR $\rho = \frac{1.86 \times A}{21}$ $\rho = \frac{17 \times 1.86 \times 1.1 \times 10^{-8}}{21}$ $\rho = 1.7 \times 10^{-8}$ (Ω m)	C1 C1 A1	**Note** ρ must be the subject **Allow** 2 marks for 1.0×10^{-9} (factor of 17 omitted) **Allow** 2 marks for 6.8×10^{-8} (diameter used instead of radius)

© OCR 2024. You may photocopy this page.

Created in ExamBuilder

Question			Answer/Indicative content	Marks	Guidance
					Allow 2 marks for 0.017 (POT omitted) <u>Examiner's Comments</u> A very large number candidates did not take into account that the resistance of the cable was the resistance of 17 wires in parallel. Many candidates did not clearly show their working. Good candidates calculated the cross-sectional area of one wire and then correctly rearranged the resistivity equation from the data booklet. Some lower ability candidates had difficulty in calculating the cross-sectional area of the wire and there were often power of ten errors. **Exemplar 6** 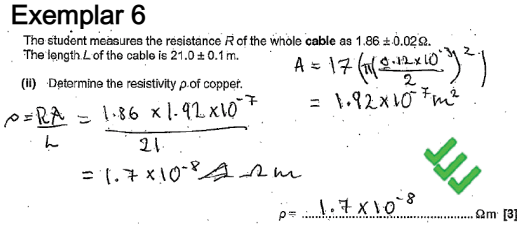 The student measures the resistance R of the whole **cable** as $1.86 \pm 0.02\,\Omega$. The length L of the cable is 21.0 ± 0.1 m. (ii) Determine the resistivity ρ of copper. $A = 17\left(\pi\left(\frac{0.12\times10^{-3}}{2}\right)^2\right) = 1.92\times10^{-7}\,m^2$ $\rho = \frac{RA}{L} = \frac{1.86\times1.92\times10^{-7}}{21} = 1.7\times10^{-8}\,\Omega\,m$ $\rho =$ 1.7×10^{-8} Ωm [3] This candidate has correctly approached the question by determining the total area of the copper in the cable and then correctly used the equation. Again, the equations used are clearly demonstrated.

Question			Answer/Indicative content	Marks	Guidance
		iii	$\frac{0.1}{21}$ or $\frac{0.02}{1.86}$ or $\frac{0.01}{0.12}$	C1	**Allow** max/min methods ρ_{max} = 2.03 × 10^{-8} and ρ_{min} = 1.41 × 10^{-8} (B1) $\frac{\Delta\rho}{\rho}x100$ (B1) x100 (B1)
			$\left(\frac{0.1}{21}+\frac{0.02}{1.86}+2\times\frac{0.01}{0.12}\right)\times 100 = 18\ (.2)\%$	A1	**Allow** 17.8% Do not penalise significant figures **Allow** 1 mark for 9.88% **Allow** 20% with evidence of working <u>Examiner's Comments</u> Many candidates clearly determined the percentage uncertainties on *L*, *R* and *d* which gained the first mark. A common final answer (which scored one mark) was 9.88% because candidates did not multiply the percentage uncertainty in *d* by two to allow for d^2. Some candidates attempted a maximum or minimum method – this was a long method and it was easy to make an error. When working out the maximum value, the maximum value of *R* and *d* needed to be used with the minimum value of *L*.
			Total	8	

© OCR 2024. You may photocopy this page.

Created in ExamBuilder