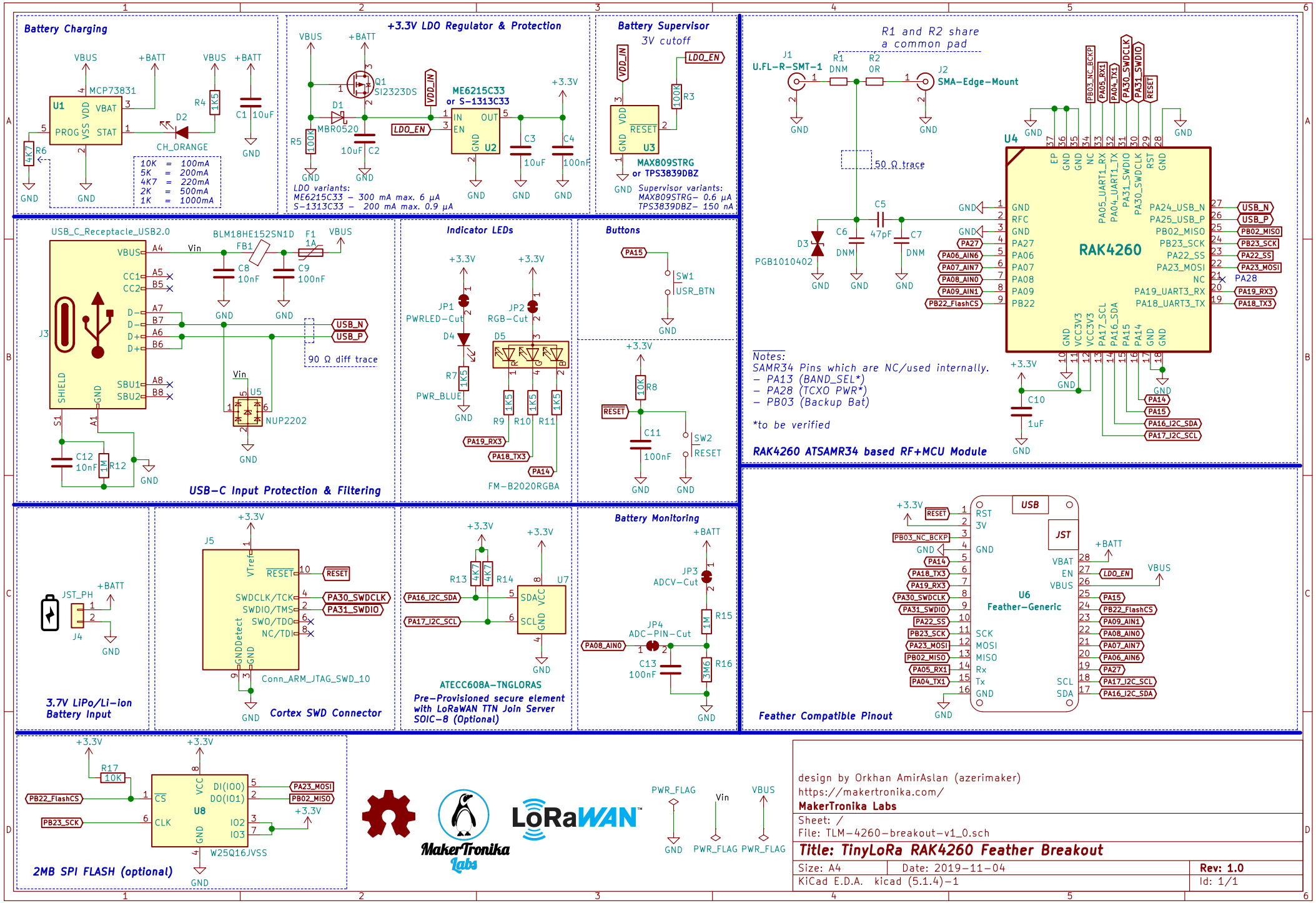
Battery Charging
MCP73831
U1
VBUS
+BATT
VDD
VBAT
PROG
VSS
STAT
R4 1K5
D2
CH_ORANGE
C1 10uF
R6 4K7
GND
10K = 100mA
5K = 200mA
4K7 = 220mA
2K = 500mA
1K = 1000mA
+3.3V LDO Regulator & Protection
Q1 SI2323DS
D1 MBR0520
R5 100K
10uF C2
VDD_IN
LDO_EN
ME6215C33
or S-1313C33
U2
IN
OUT
EN
GND
+3.3V
C3 10uF
C4 100nF
LDO variants:
ME6215C33 – 300 mA max. 6 µA
S-1313C33 – 200 mA max. 0.9 µA
Battery Supervisor
3V cutoff
RESET
U3
R3 100K
MAX809STRG
or TPS3839DBZ
Supervisor variants:
MAX809STRG– 0.6 µA
TPS3839DBZ– 150 nA
R1 and R2 share
a common pad
J1
U.FL-R-SMT-1
R1 DNM
R2 0R
J2
SMA-Edge-Mount
50 Ω trace
C5 47pF
C6 DNM
C7 DNM
D3
PGB1010402
U4
RAK4260
GND
RFC
PA27
PA06
PA07
PA08
PA09
PB22
PA24_USB_N
PA25_USB_P
PB02_MISO
PB23_SCK
PA22_SS
PA23_MOSI
NC
PA19_UART3_RX
PA18_UART3_TX
PA05_UART1_RX
PA04_UART1_TX
PA31_SWDIO
PA30_SWDCLK
RST
EP
VCC3V3
PA17_SCL
PA16_SDA
PA15
PA14
PA03_NC_BCKP
PA05_RX1
PA04_TX1
PA30_SWDCLK
PA31_SWDIO
RESET
USB_N
USB_P
PA28
PA19_RX3
PA18_TX3
PA16_I2C_SDA
PA17_I2C_SCL
C10 1uF
Notes:
SAMR34 Pins which are NC/used internally.
– PA13 (BAND_SEL*)
– PA28 (TCXO PWR*)
– PB03 (Backup Bat)
*to be verified
RAK4260 ATSAMR34 based RF+MCU Module
USB_C_Receptacle_USB2.0
J3
VBUS
CC1
CC2
D-
D+
SHIELD
SBU1
SBU2
BLM18HE152SN1D
FB1
F1 1A
C8 10nF
C9 100nF
90 Ω diff trace
U5
NUP2202
C12 10nF
R12 1M
USB-C Input Protection & Filtering
Indicator LEDs
JP1 PWRLED-Cut
D4
R7 1K5
PWR_BLUE
JP2 RGB-Cut
D5
R9 1K5
R10 1K5
R11 1K5
PA19_RX3
PA18_TX3
PA14
FM-B2020RGBA
Buttons
PA15
SW1
USR_BTN
R8 10K
RESET
C11 100nF
SW2
RESET
JST_PH
J4
3.7V LiPo/Li-ion
Battery Input
J5
VTref
SWDCLK/TCK
SWDIO/TMS
SWO/TDO
NC/TDI
GNDDetect
Conn_ARM_JTAG_SWD_10
Cortex SWD Connector
R13 4K7
R14 4K7
U7
SDA
SCL
VCC
PA16_I2C_SDA
PA17_I2C_SCL
ATECC608A-TNGLORAS
Pre-Provisioned secure element
with LoRaWAN TTN Join Server
SOIC-8 (Optional)
Battery Monitoring
JP3 ADCV-Cut
JP4 ADC-PIN-Cut
PA08_AIN0
C13 100nF
R15 1M
R16 3M6
USB
JST
U6
Feather-Generic
RST
3V
VBAT
EN
VBUS
Rx
Tx
SCK
MOSI
MISO
SCL
SDA
Feather Compatible Pinout
R17 10K
U8
CS
CLK
DI(IO0)
DO(IO1)
IO2
IO3
W25Q16JVSS
PB22_FlashCS
PB23_SCK
PA23_MOSI
PB02_MISO
2MB SPI FLASH (optional)
MakerTronika Labs
LoRaWAN
PWR_FLAG
Vin
VBUS
design by Orkhan AmirAslan (azerimaker)
https://makertronika.com/
MakerTronika Labs
Sheet: /
File: TLM-4260-breakout-v1_0.sch
Title: TinyLoRa RAK4260 Feather Breakout
Size: A4
Date: 2019-11-04
Rev: 1.0
KiCad E.D.A. kicad (5.1.4)-1
Id: 1/1