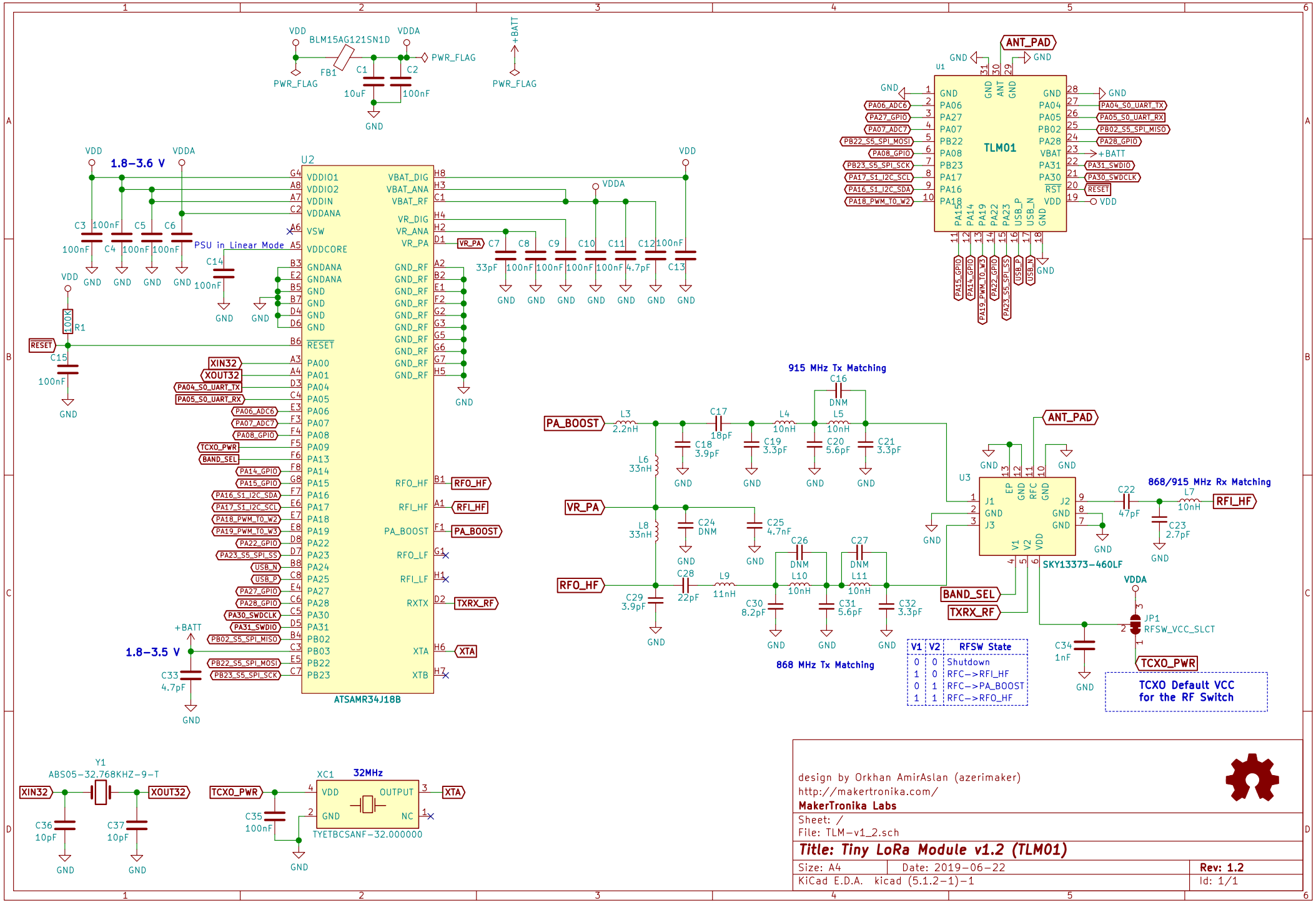
VDD
BLM15AG121SN1D
VDDA
PWR_FLAG
FB1
C1
C2
10uF
100nF
GND
+BATT
ANT_PAD
U1
TLM01
PA06_ADC6
PA27_GPIO
PA07_ADC7
PB22_S5_SPI_MOSI
PA08_GPIO
PB23_S5_SPI_SCK
PA17_S1_I2C_SCL
PA16_S1_I2C_SDA
PA18_PWM_T0_W2
PA04_S0_UART_TX
PA05_S0_UART_RX
PB02_S5_SPI_MISO
PA28_GPIO
PA31_SWDIO
PA30_SWDCLK
RESET
1.8–3.6 V
U2
ATSAMR34J18B
PSU in Linear Mode
VDDIO1
VDDIO2
VDDIN
VDDANA
VSW
VDDCORE
GNDANA
VBAT_DIG
VBAT_ANA
VBAT_RF
VR_DIG
VR_ANA
VR_PA
RFO_HF
RFI_HF
PA_BOOST
RFO_LF
RFI_LF
RXTX
XTA
XTB
XIN32
XOUT32
TCXO_PWR
BAND_SEL
TXRX_RF
1.8–3.5 V
915 MHz Tx Matching
868 MHz Tx Matching
868/915 MHz Rx Matching
SKY13373–460LF
JP1
RFSW_VCC_SLCT
TCXO Default VCC for the RF Switch
V1 V2 RFSW State
0 0 Shutdown
1 0 RFC–>RFI_HF
0 1 RFC–>PA_BOOST
1 1 RFC–>RFO_HF
Y1
ABS05–32.768KHZ–9–T
XC1
32MHz
TYETBCSANF–32.000000
design by Orkhan AmirAslan (azerimaker)
http://makertronika.com/
MakerTronika Labs
Sheet: /
File: TLM–v1_2.sch
Title: Tiny LoRa Module v1.2 (TLM01)
Size: A4
Date: 2019–06–22
Rev: 1.2
KiCad E.D.A. kicad (5.1.2–1)–1
Id: 1/1