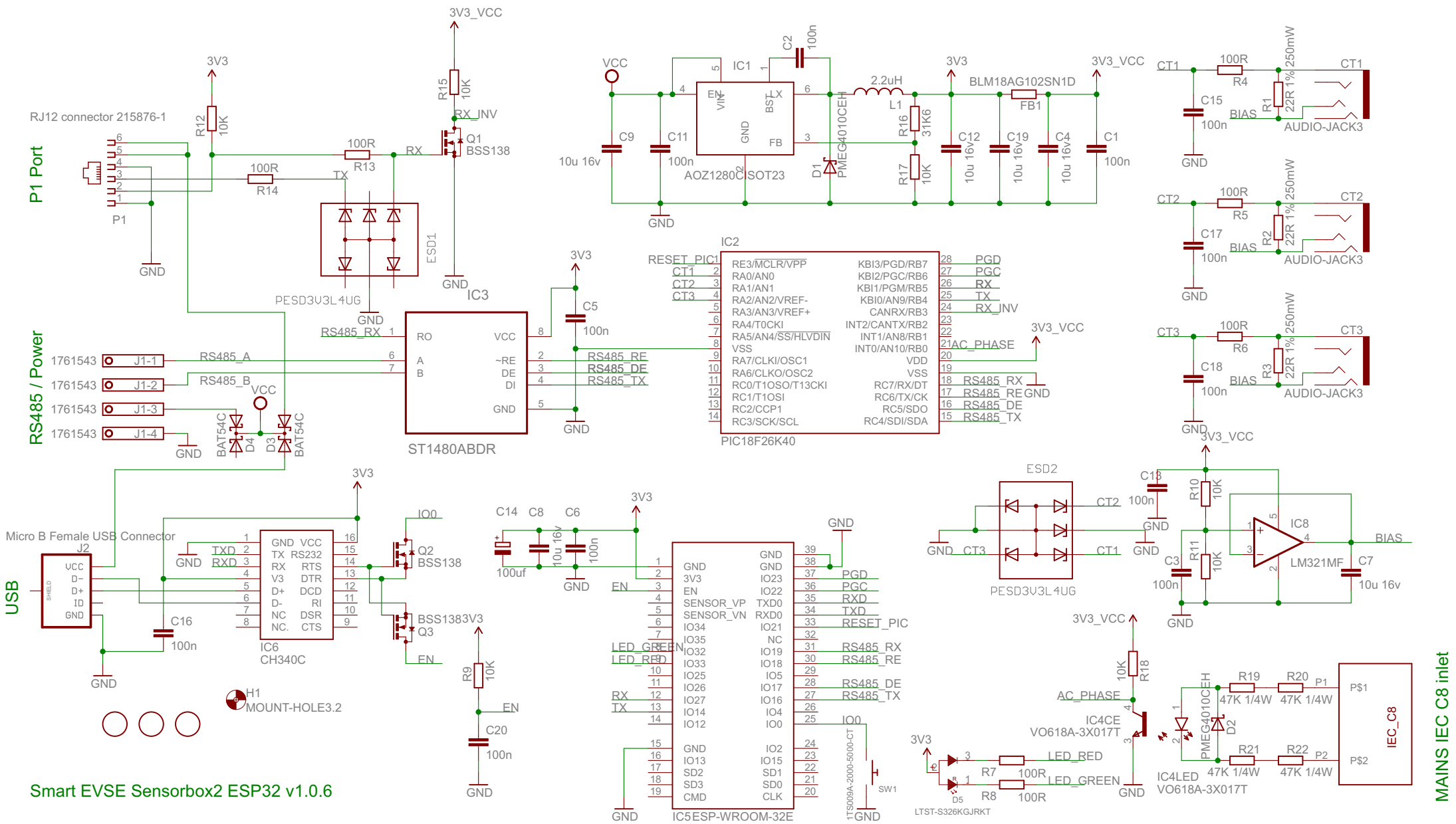

Smart EVSE Sensorbox2 ESP32 v1.0.6