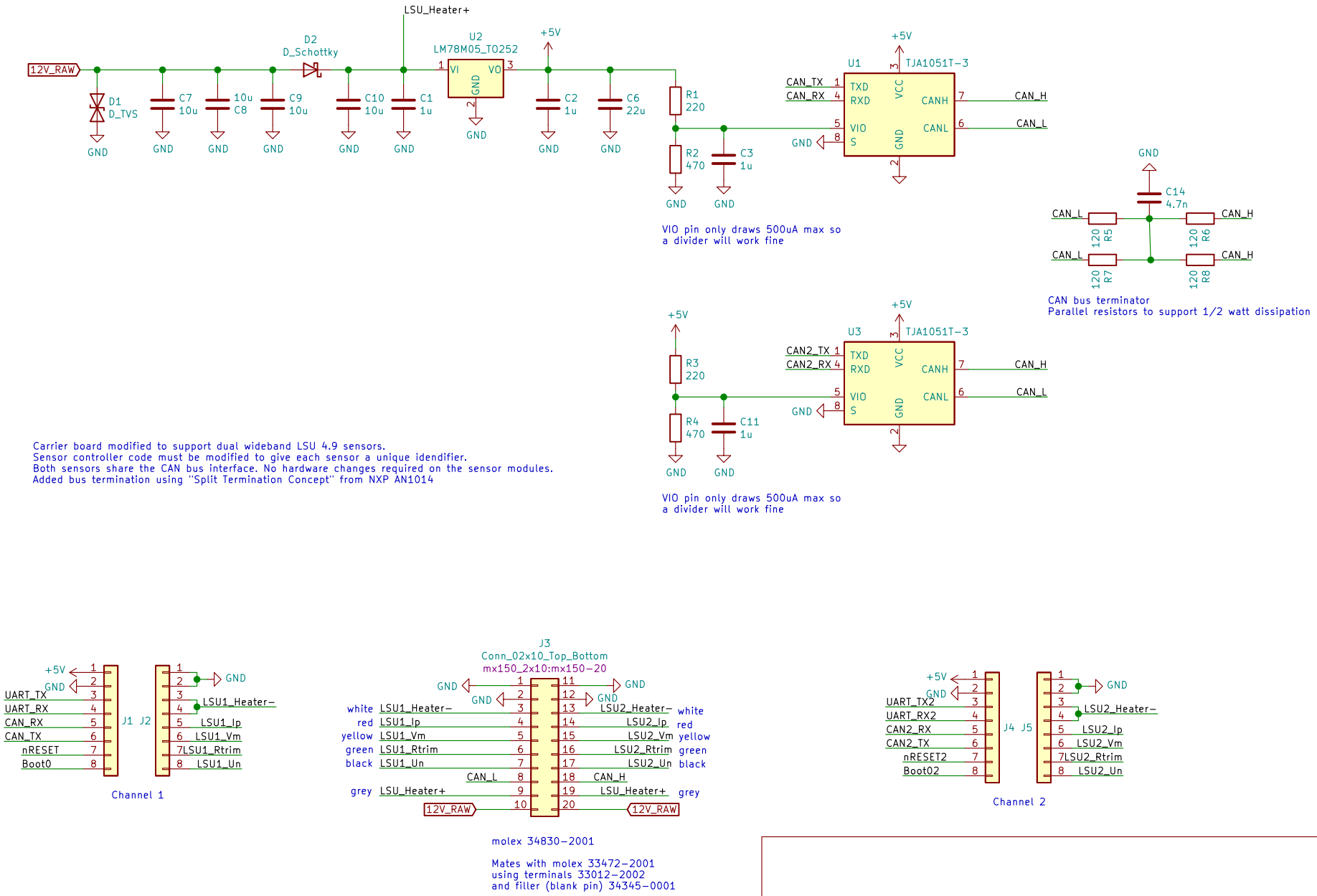

Sheet: /
File: dual_board_carrier.sch

Title: Dual Channel Wideband Controller

Size: USLetter	Date: 01/17/2021	Rev:
KiCad E.D.A. kicad (5.1.9)-1		Id: 1/1