Casting

Metal casting process

- **Primary manufacturing process (used to convert a raw material to a primary shaped and sized product).**
- **Raw material is liquefied in a furnace.**
- **Liquefied metal is poured in a mould cavity.**
- **Liquid metal is solidified in the mould cavity.**
- **Product is taken out from the mould cavity.**

Steps of product manufacturing by casting:

1. **Pattern and mould preparation**
2. **Melting and pouring**
3. **Solidification and further cooling to room temperature**
4. **Inspection for defects**

Metal casting process

Advantages of casting:

1. Intricate shapes can be manufactured
2. Vast types of materials can be cast
3. Tools are simple and cheap
4. Uniform properties in all directions
5. Size range of products is large

Disadvantages of casting:

1. Poor dimensional accuracy and surface finish
2. Labour intensive process
3. Some casting defects are unavoidable

Metal casting process

Sand casting mould:

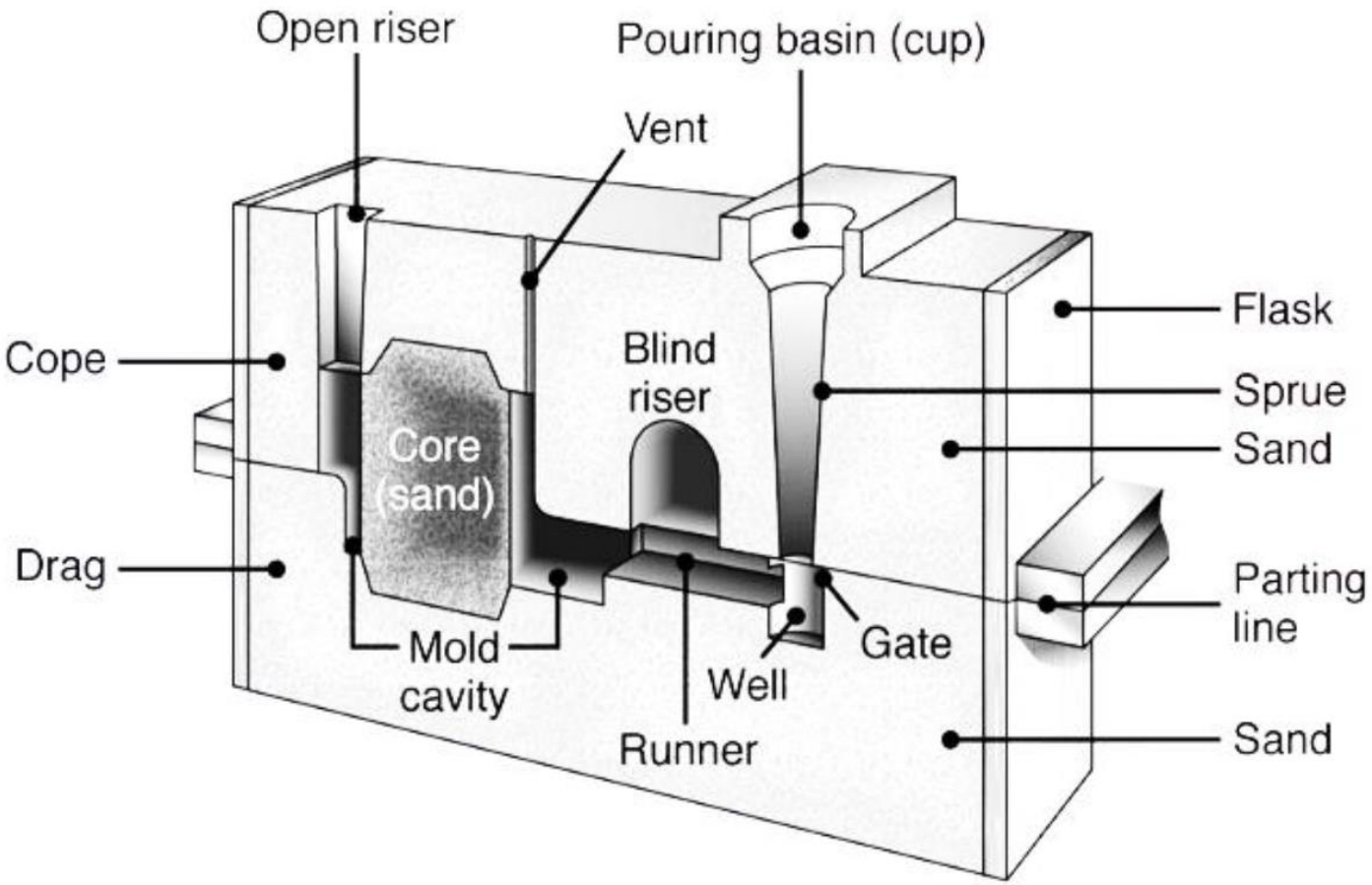

1. **Moulding flask**
2. **Pattern**
3. **Parting line**
4. **Bottom board**
5. **Facing sand**
6. **Moulding sand**
7. **Backing sand**
8. **Core**
9. **Core Print**
10. **Pouring Basin**
11. **Sprue**
12. **Runner**
13. **Gate**
14. **Riser**
15. **Chill**
16. **Chaplet**

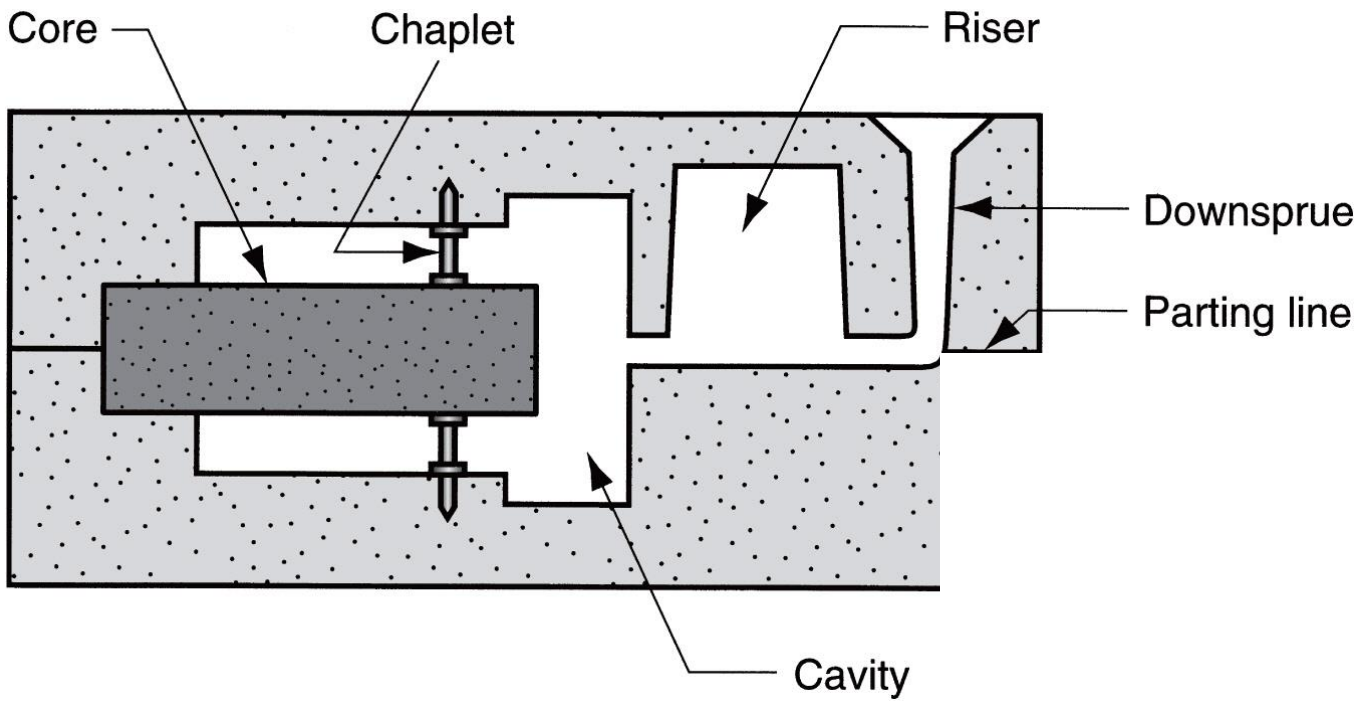
Core
Chaplet
Riser
Downsprue
Parting line
Cavity

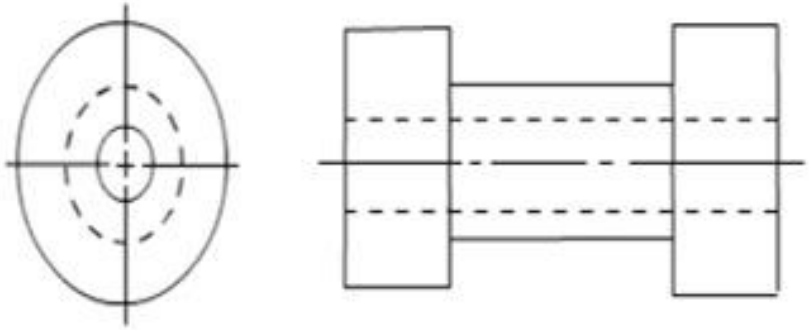

JOB

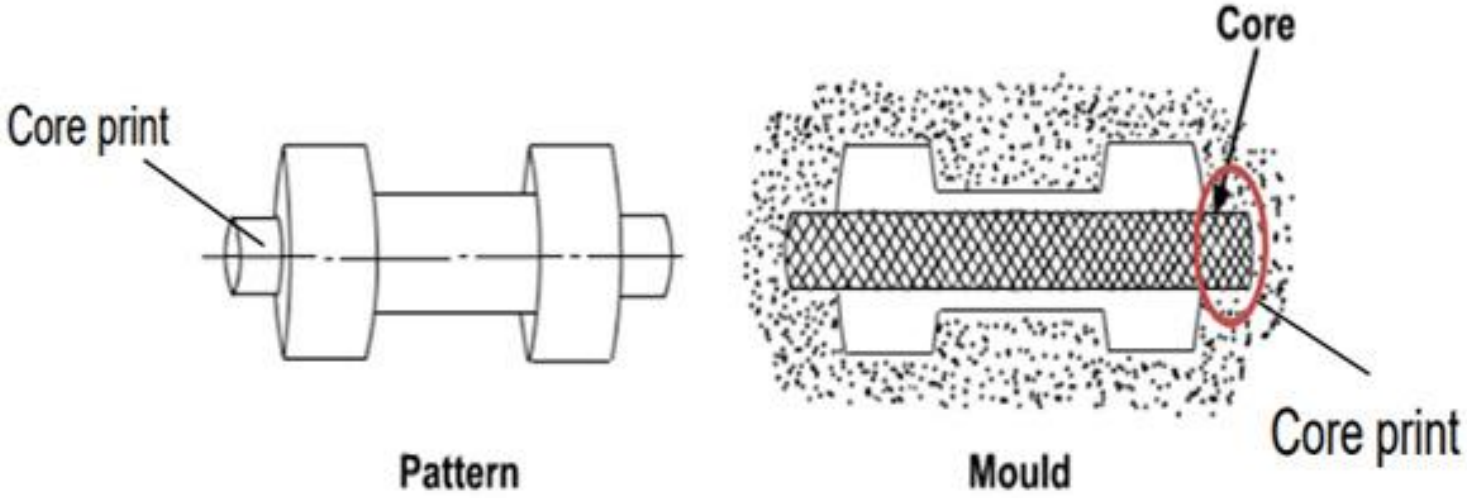
Core print
Core
Core print
Pattern
Mould

Patterns

Pattern is the replica of the product with certain modifications.

Main modifications to the product for the development of pattern:

1. Addition of pattern allowances
2. Provision of core prints
3. Elimination of fine details

Pattern Allowances

1. Shrinkage allowance
2. Finish/machining allowance
3. Draft allowance
4. Shake allowance
5. Distortion allowance

Pattern Allowances

Draft allowance

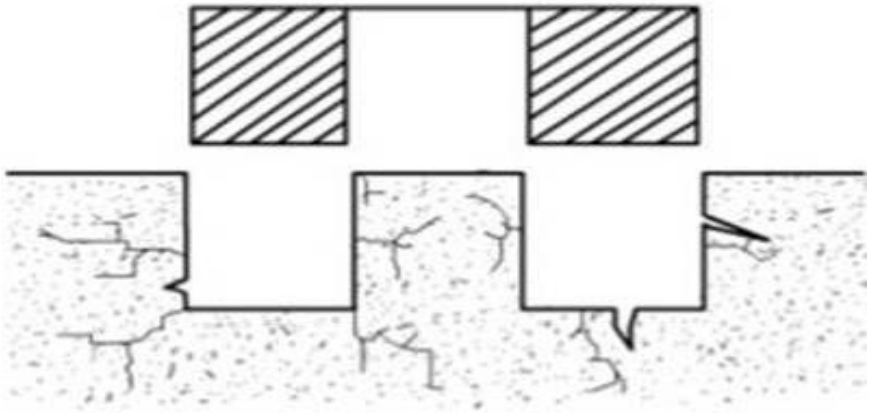

Distorted Casting

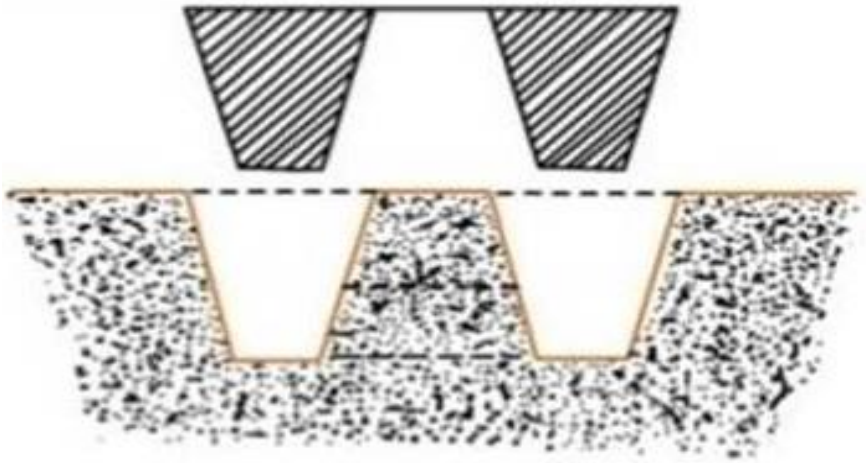

Taper Casting

Distortion allowance

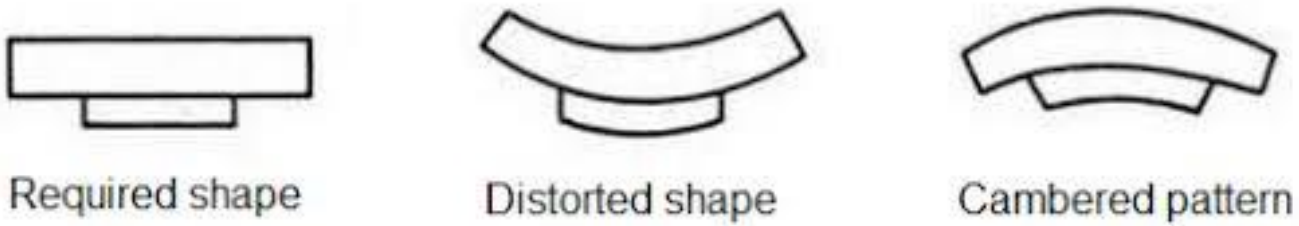

Types of Pattern

1. Single piece pattern
2. Split pattern
3. Gated pattern
4. Cope and drag pattern
5. Match plate pattern
6. Loose piece pattern
7. Follow board pattern
8. Sweep pattern
9. Skeleton pattern

Single piece/Solid pattern

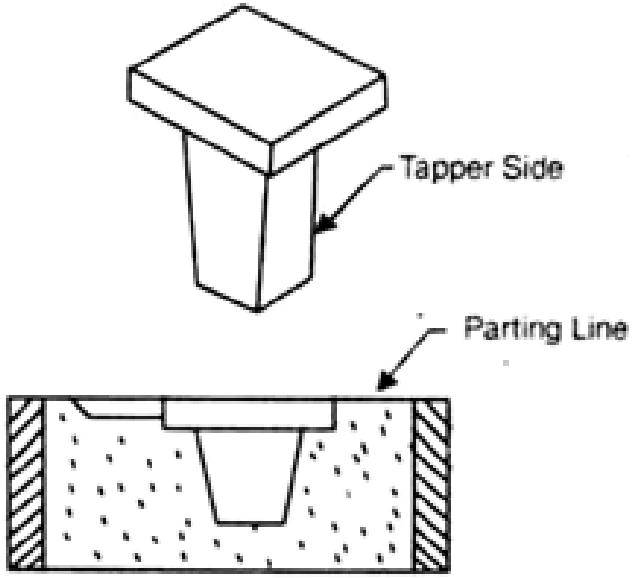

(*a*) Solid piece pattern.

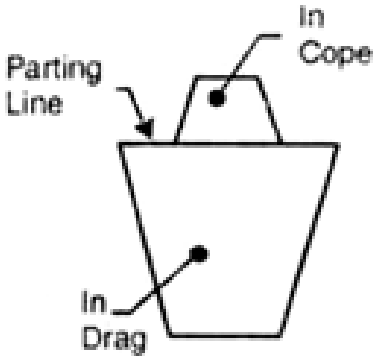

(*b*) Solid pattern in cope and drag.

1. Simplest pattern, made of a single piece.
2. Used for very simple jobs with no withdrawal problem.
3. In most of the cases, the pattern remains in drag.

Split/ Two piece pattern

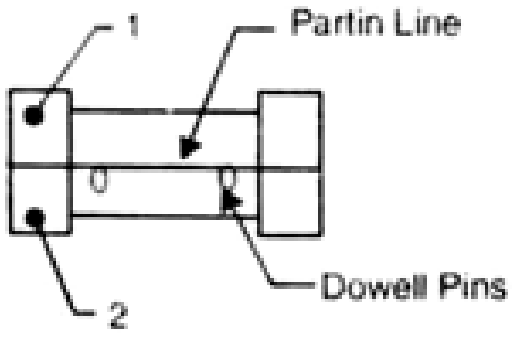

(*a*) Split pattern.

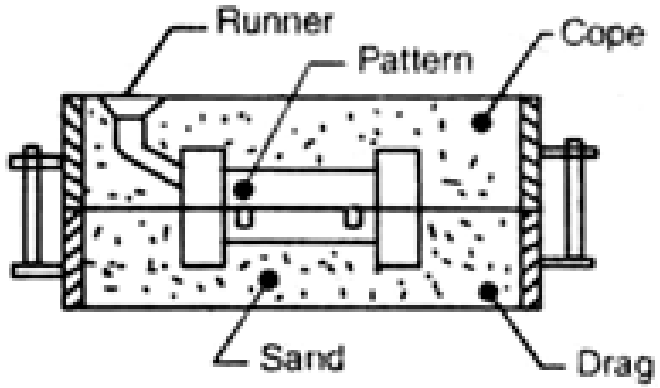

(*b*) Pattern in moulding sand.

1. Most widely used pattern for intricate casting.
2. Used for patterns with withdrawal problem.
3. Pattern is split in cope and drag with proper alignment, split surface on parting plane.

Gated pattern

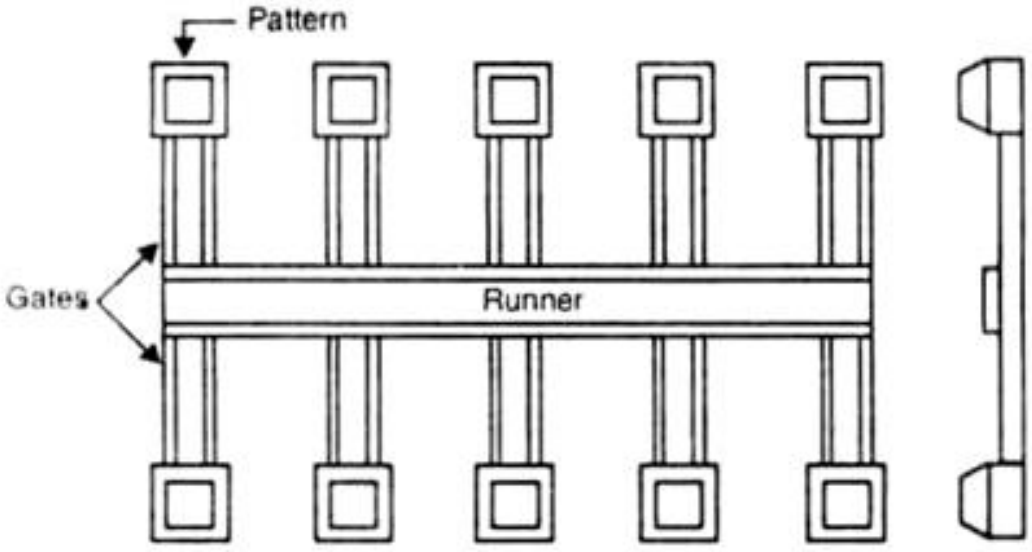

1. Gating and runner system are integral with the pattern.
2. Time needed for manual preparation of gate and runner is eliminated.
3. Used in mass-production of small size castings.

Cope and Drag pattern

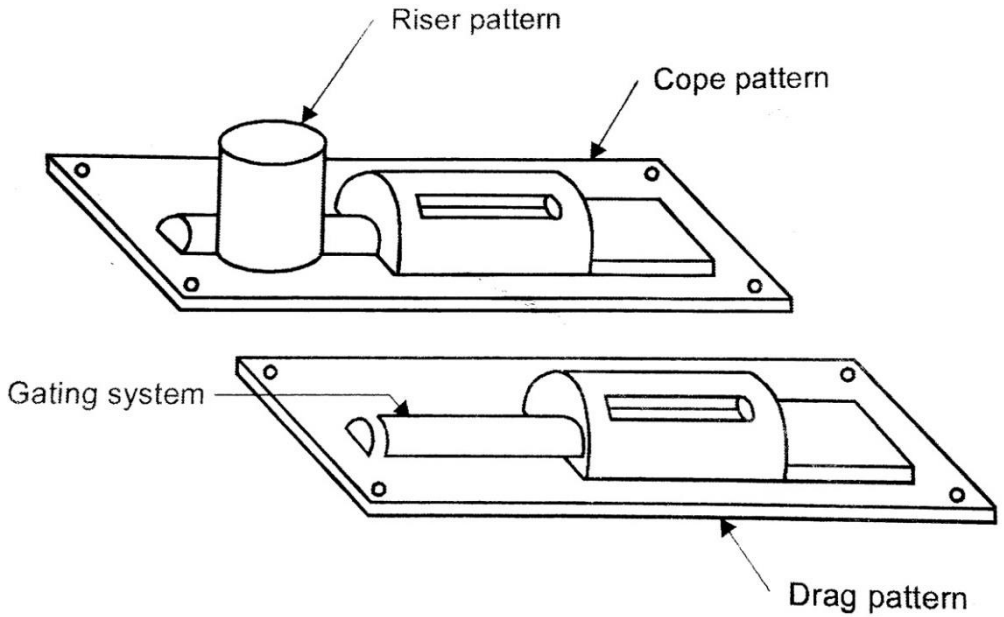

1. Cope and drag halves of the pattern along with the gating and risering systems are attached separately to metal/wooden plates with alignment pins.
2. Cope and drag moulds are prepared separately by two workers simultaneously.
3. Cope and drag moulds are assembled to get the final mould.
4. Used for heavy castings.

Match plate pattern

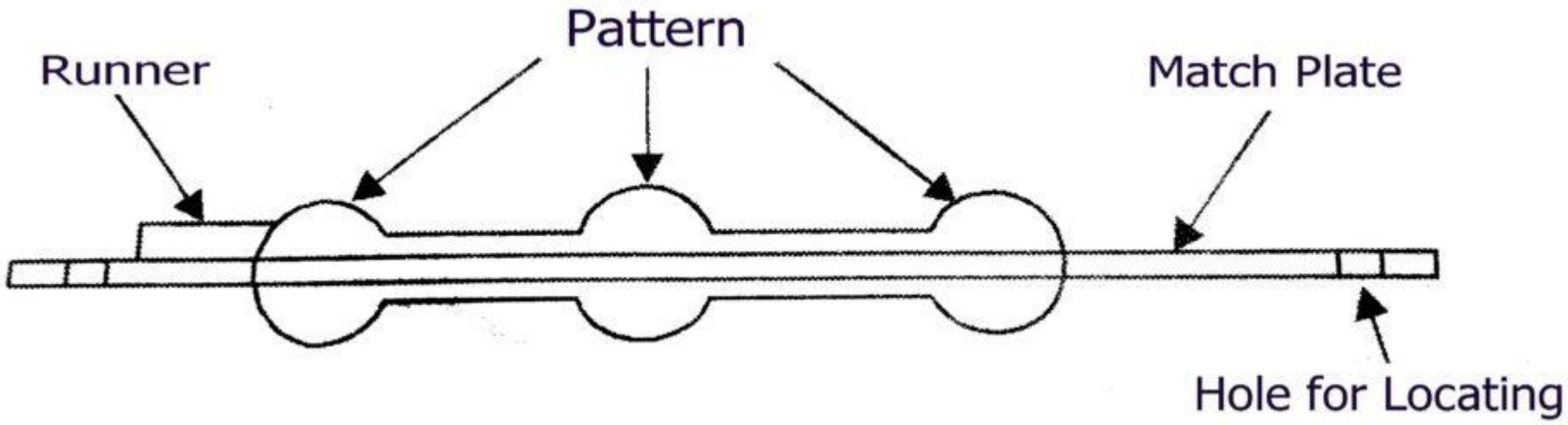

1. Cope and drag halves of the pattern along with the gating and risering systems are mounted on a single wooden/metal (mostly aluminium) plate on either sides.
2. After moulding, when the match plate is removed, a complete mould with gating is obtained.
3. Used for small castings in large quantity with high dimensional accuracy.

Loose piece pattern

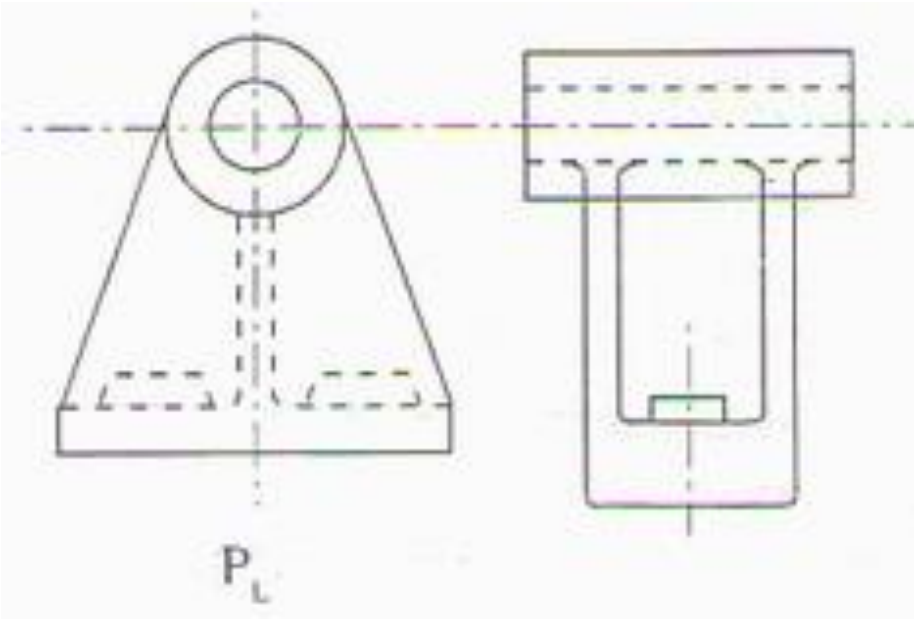

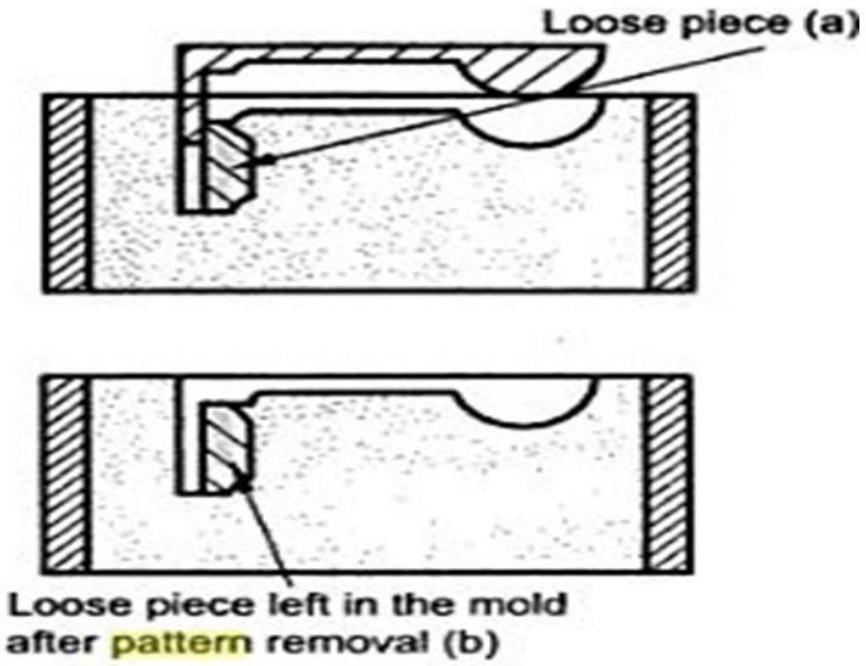

1. Used when withdrawal of the pattern from mould is impossible due to complicated contour.
2. Obstructing portion is held as a loose piece by a wire.
3. After moulding, the main part is first withdrawn, then the loose piece.
4. Requires highly skilled worker.

Follow board pattern

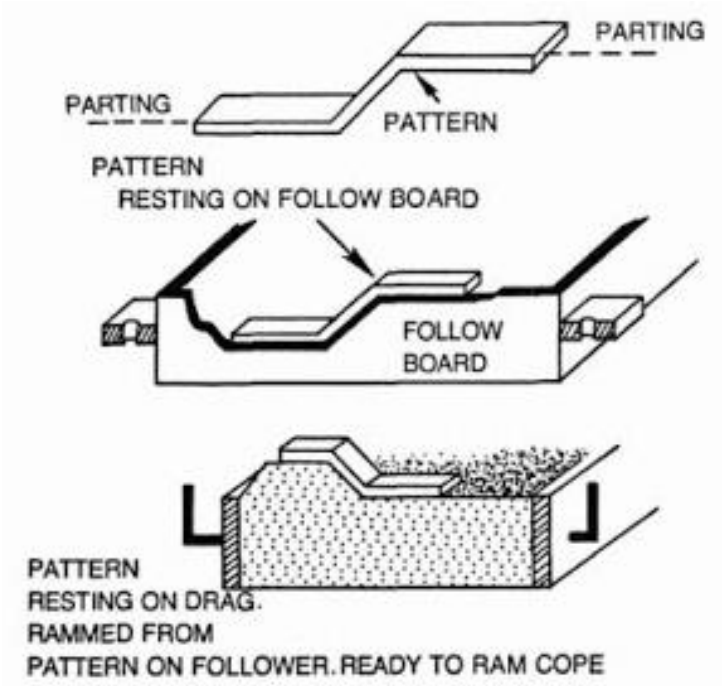

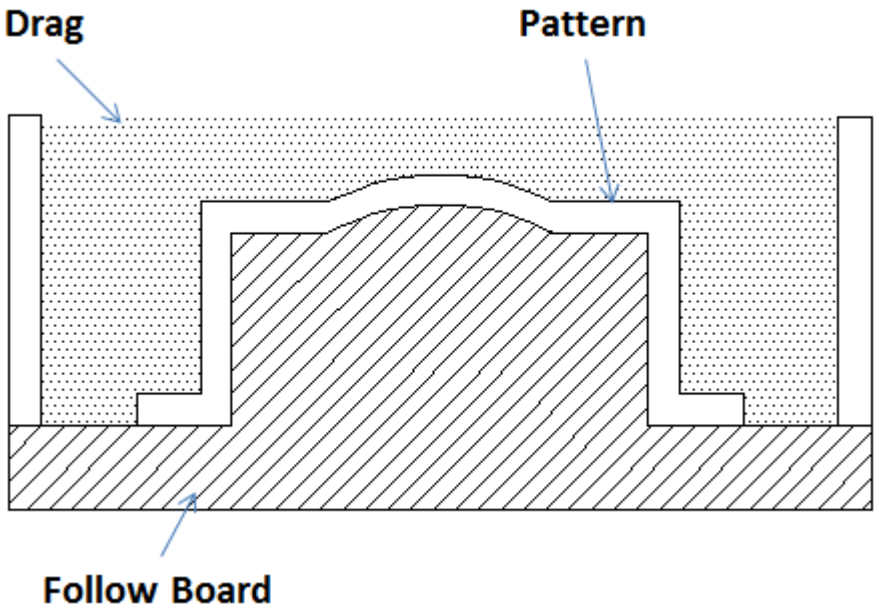

1. Used for castings with weak sections or irregular shape.
2. The bottom board is modified to closely fit the weak section or the odd contour.
3. Supports the pattern during ramming of the drag.

Sweep pattern

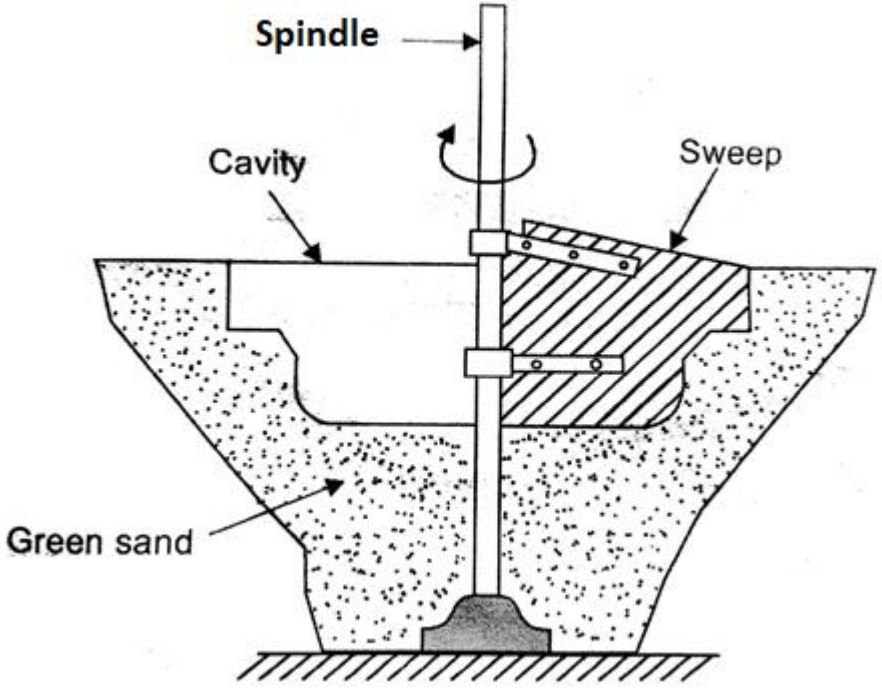

1. Used for moulding of large axisymmetric shapes.
2. The pattern is a plane with the desired contour.
3. Cost of pattern making is greatly reduced by using sweep pattern.

Skeleton pattern

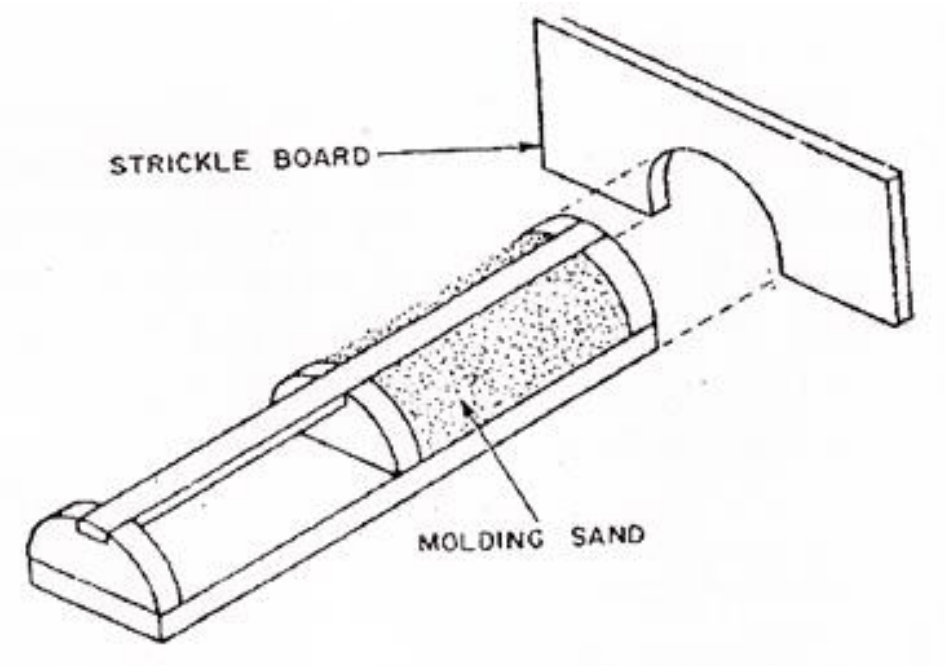

1. It is a hollow form of pattern, consisting of a wooden frame and ribs.
2. The hollow portion is filled with loam sand or clayed sand.
3. A stickle board is used to scrap the surplus sand.
4. Used for very large castings required in small quantities.

Pattern materials

Wood

1. Most widely used
2. Easily available
3. Low weight
4. Problem of moisture absorption causing dimensional inaccuracy over time
5. Low durability due to wear
6. Pine, mahogany, teak, walnut, deodar trees are commonly used

Metal

1. Durable, dimensionally accurate, better surface finish
2. Extensively used for large production quantity
3. Aluminium and white metal are mostly used due to low weight, easily workable, corrosion resistance.
4. Low shrinkage allowance is needed for metal patterns.

Plastic

1. Low weight, easy formability, durability, smooth surface finish
2. Dimensionally stable
3. Corrosion resistant, does not absorb moisture like wood
4. Epoxy resins are commonly used

Types of Moulding Sand

1. **Green moulding sand:** Freshly prepared mixture of silica, clay and moisture.
2. **Backing/system sand:** Reconditioned foundry sand (burnt sand) used in bulk of the mould.
3. **Facing sand:** mixture of system sand with finely powdered sea coal or bituminous coal (2% - 3%) to obtain better surface finish and to prevent sand fusion by avoiding mould-metal interaction.
4. **Parting sand:** Applied on parting plane and pattern surface for easy removal of pattern and easy separation of cope and drag flasks at parting plane. Composition is washed silica sand.
5. **Mould wash:** Finely powdered sea coal, graphite or some proprietary material is mixed with alcohol and applied on mould cavity by spraying/painting. Purpose is same as that of facing sand.

Properties of Moulding Sand

1. **Refractoriness:** Ability of moulding material to withstand high temperature of molten metal so that the sand does not fuse.

Material	Melting point (^{O}C)	Coeff. Of linear expansion x 10^6
Silica (SiO_2)	1710	16.2
Alumina (Al_2O_3)	2020	8.0
Zircon ($ZrO_2 + SiO_2$)	2650	4.5

2. Green strength: Strength of the moulding sand in moist condition to retain the shape and size of the mould cavity.

3. Dry Strength: Strength of the moulding sand to retain the shape and size of the mould cavity when molten metal is poured and the mould becomes dry.

Properties of Moulding Sand

4. Hot strength: Strength of the moulding sand to retain the shape and size of the mould cavity when the mould becomes hot due to the presence of hot metal.

5. Permeability: Ability of the moulding sand to expel various gases through the mould during casting.

6. Collapsibility: During solidification of the molten metal, the moulding sand should not resist the shrinkage of the casting. This property is called collapsibility.

7. Thermal conductivity: This should be high for better heat removal from the casting.

Effects of different variables on moulding sand properties

1. **Shape and size of sand grains:** Coarse grains increase permeability and refractoriness, but deteriorates green strength and surface finish. Widely distribution of grain size increases permeability. Round grains decrease permeability.
2. **Clay and Water:** Strength of moulding sand increases with increase in clay content. For a certain amount of clay, an optimum amount of water should be used to obtain maximum strength.
3. **Moulding procedure:** Increased ramming increases bulk density and mould strength, but reduces permeability.

Properties of a good quality mould:

1. Strong enough to withstand the temperature and weight of molten metal.
2. Resistance to erosive action of erosive hot metal.
3. Gas generation should be minimum.
4. Good venting capacity.

Types of sand mould

1. **Green-sand mould:** Most commonly used and least expensive. Metal is poured immediately and casting is taken out. Require less floor space and no storage of the mould is done. Mould erosion is common problem.
2. **Dry-sand mould:** Green sand moulds dried at 150 to 350 C in an oven for 8 to 48 hours. Higher strength than green-sand mould. Used for medium to large castings. Better surface finish and dimensional accuracy. Mould may be distorted during baking. Production cycle is longer. Costlier than green-sand mould.
3. **Skin-dried mould:** Skin of the mould is dried by a torch to a depth of 15 – 25 mm, instead of drying the complete mould.

Elements of a gating system

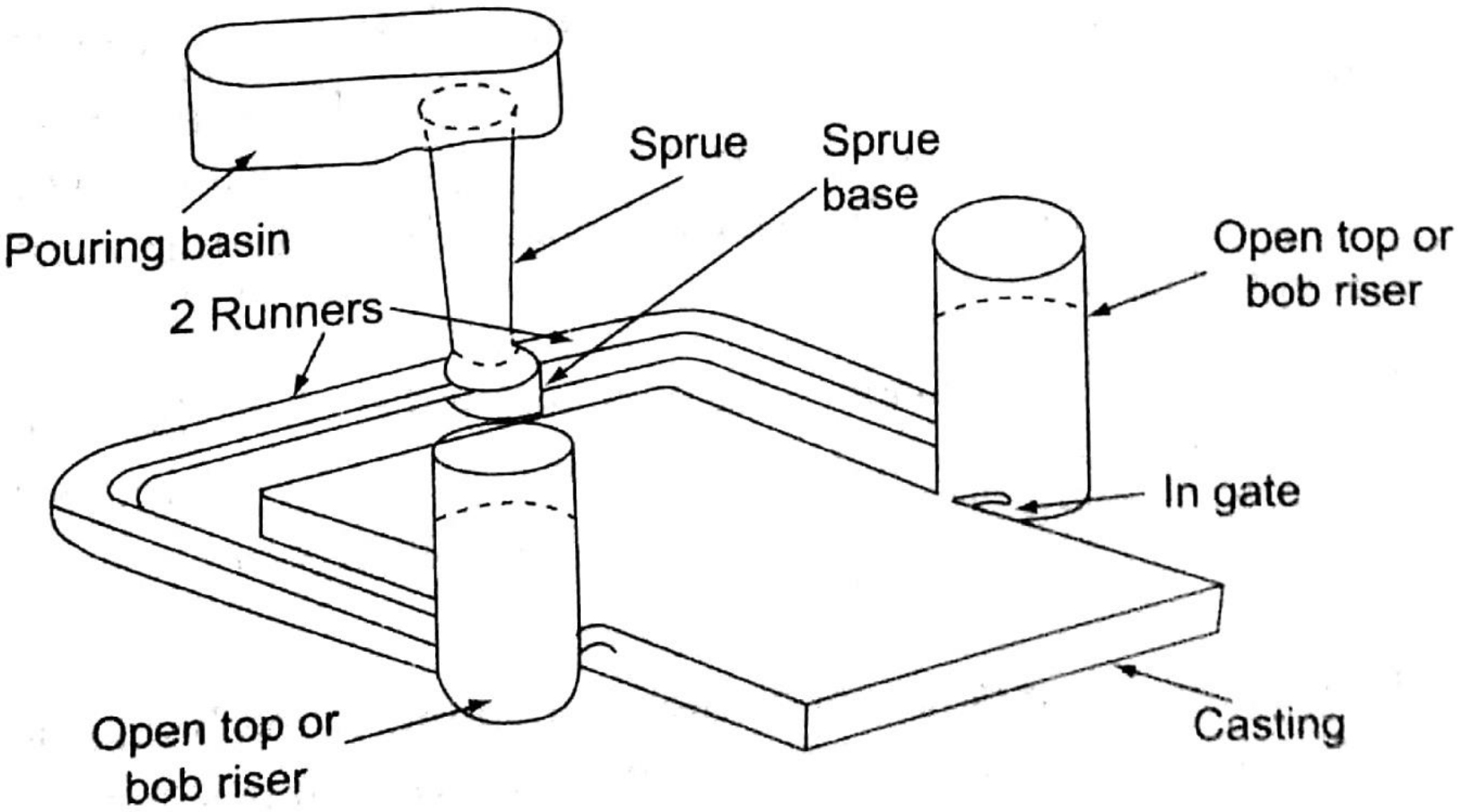

Pouring Basin

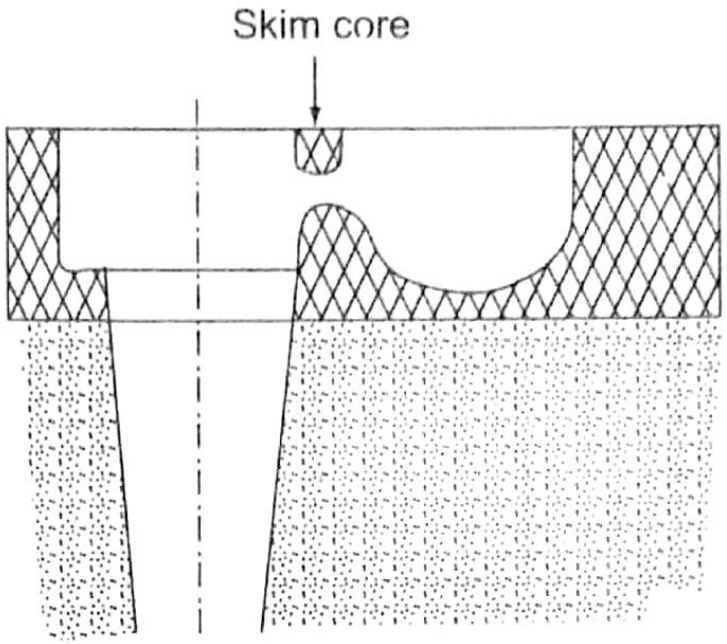

Main function: It reduces the momentum of liquid metal flowing into the mould cavity.

It should always be full to avoid air flow to the mould cavity.

Skim core/Skimmer: Separates the slag from the molten metal.

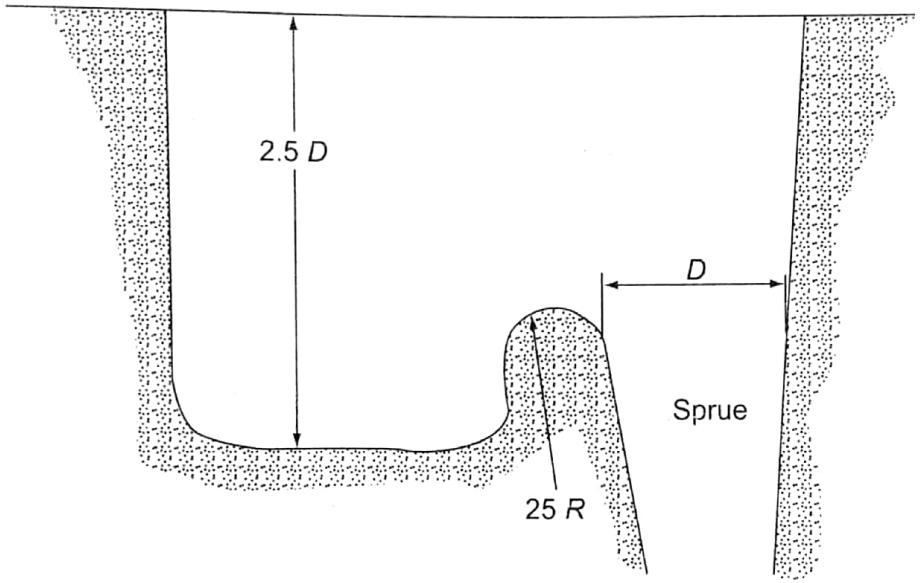

Ceramic Filter: Removes slag and creates smooth flow in the sprue

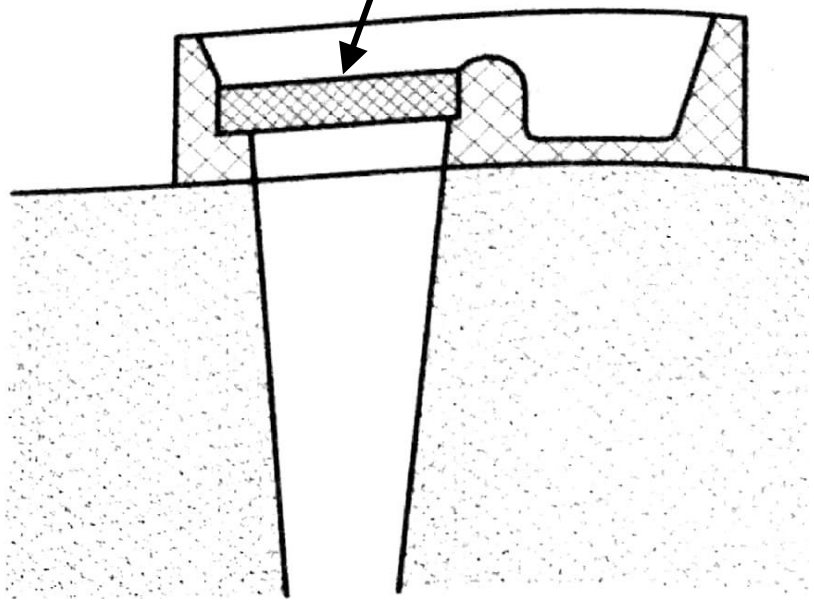

Sprue It is the channel through which molten metal comes from the pouring basin to the parting plane.

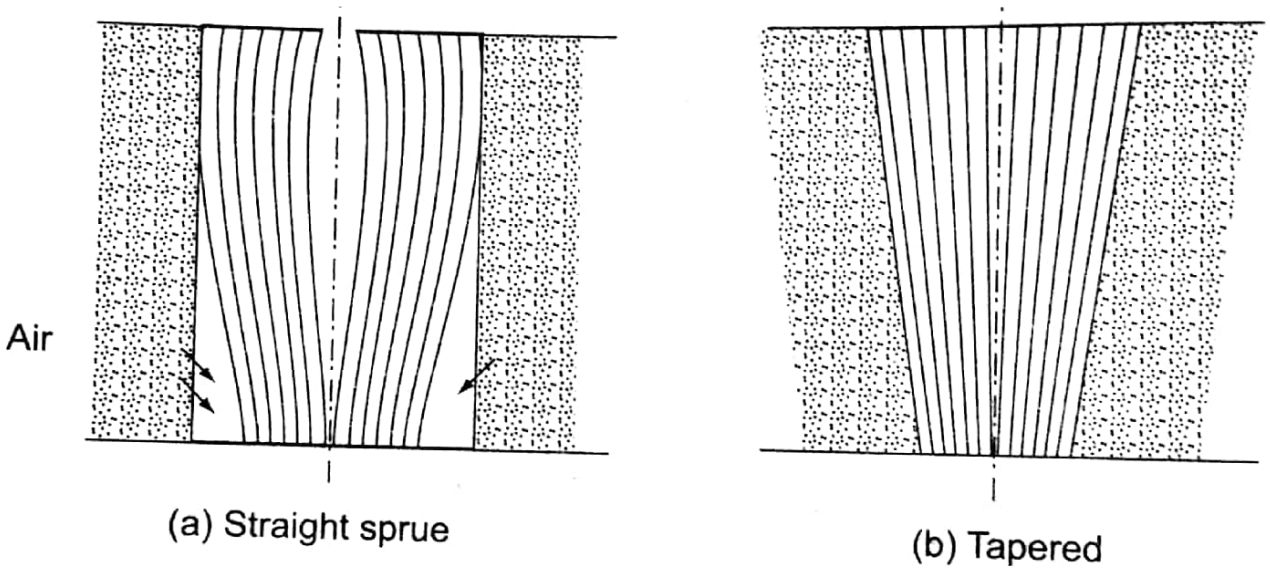

Straight cylindrical sprue: Low pressure zone is created around the metal flow, causing air flow from the atmosphere to the mould cavity.

Tapered cylindrical sprue: Sprue is always full of metal, hence no air flow from the atmosphere to the mould cavity.

Sprue base well: Molten metal reservoir at sprue bottom. It reduces the momentum of liquid metal, thus reduces mould erosion.

Generally, Sprue base well area is 5 times that of the sprue bottom (choke) area, and well depth approximately equal to that of the runner.

Runner It is the channel at the parting plane that allows metal flow from the sprue base well to the gate.

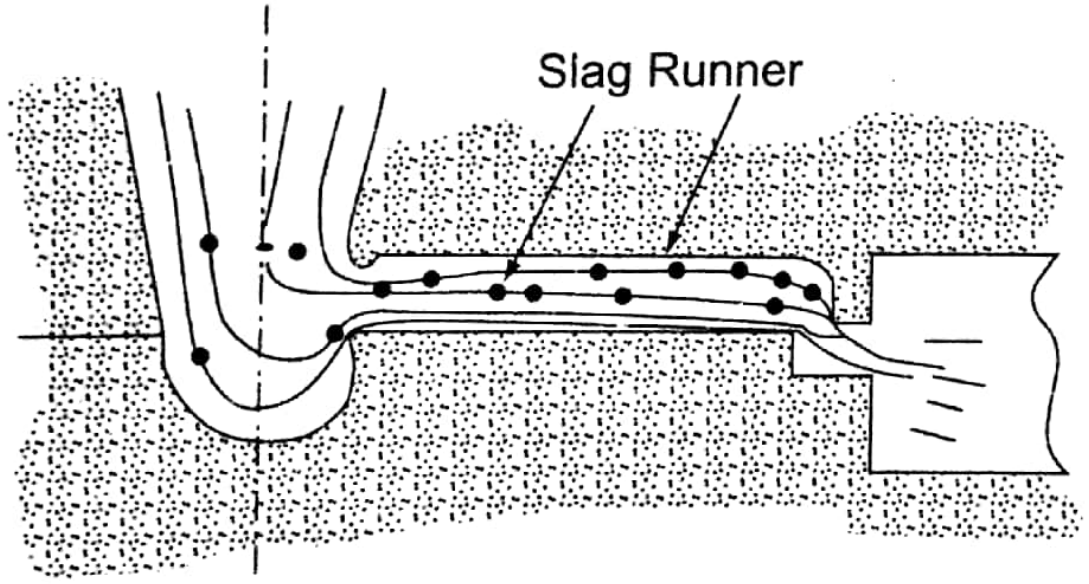

(a) Runner full

No slag flow into the mould cavity.

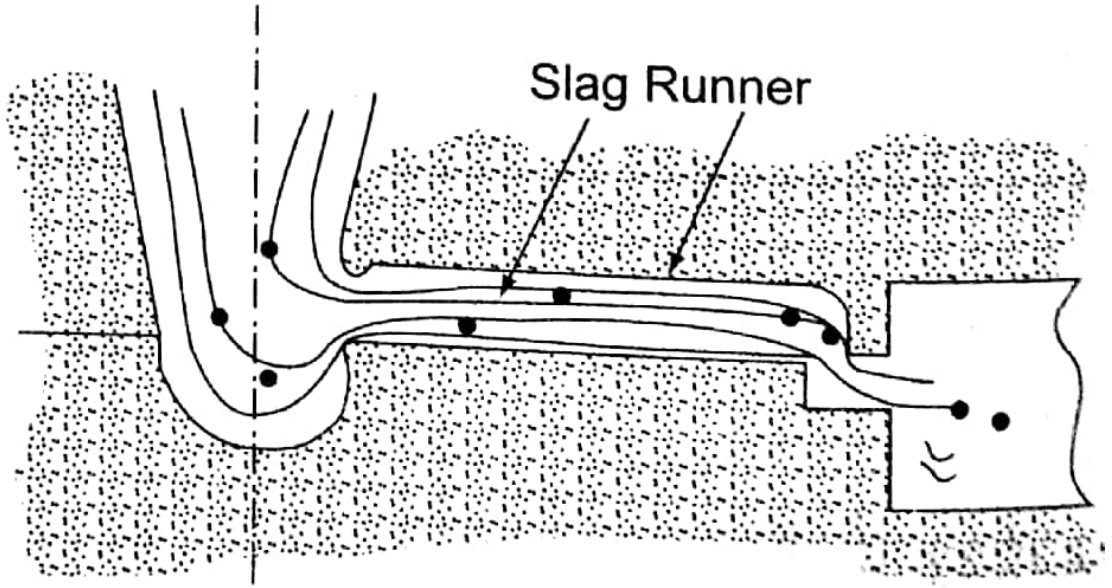

(b) Runner partially full

Slag flow into the mould cavity. Also, air inclusion may occur.

Runner extension: Runner is extended beyond the gate for slag trapping.

Gate/In-gate Opening through which molten metal enters the mould cavity from the runner.

Types of gate:

1. Top gate
2. Bottom gate
3. Parting gate
4. Step gate

Top Gate

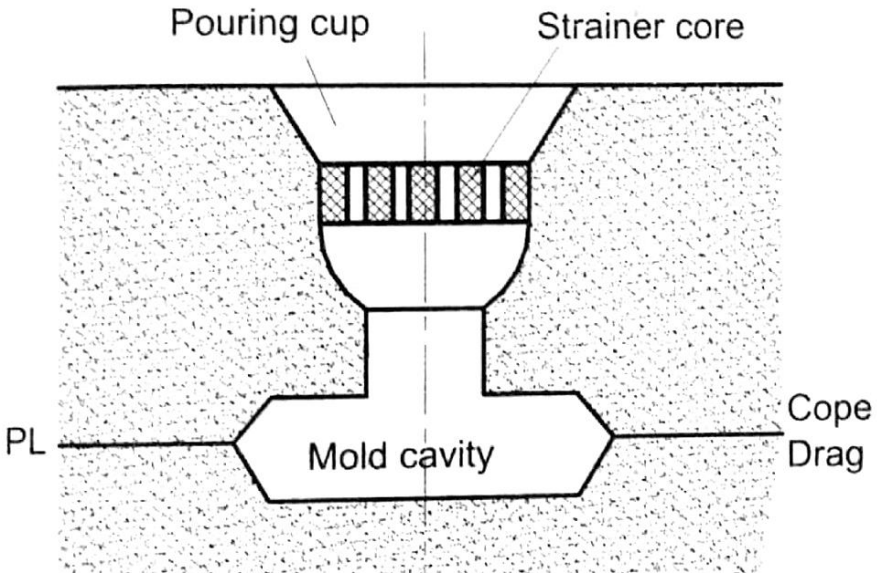

- Mould cavity filled very quickly.
- Favourable temperature gradient.
- No riser required.
- Causes mould erosion.
- Causes turbulence, thus producing dross.
- Suitable for simple, low-depth casting.
- Unsuitable for non-ferrous casting.
- High casting yield.

Bottom Gate

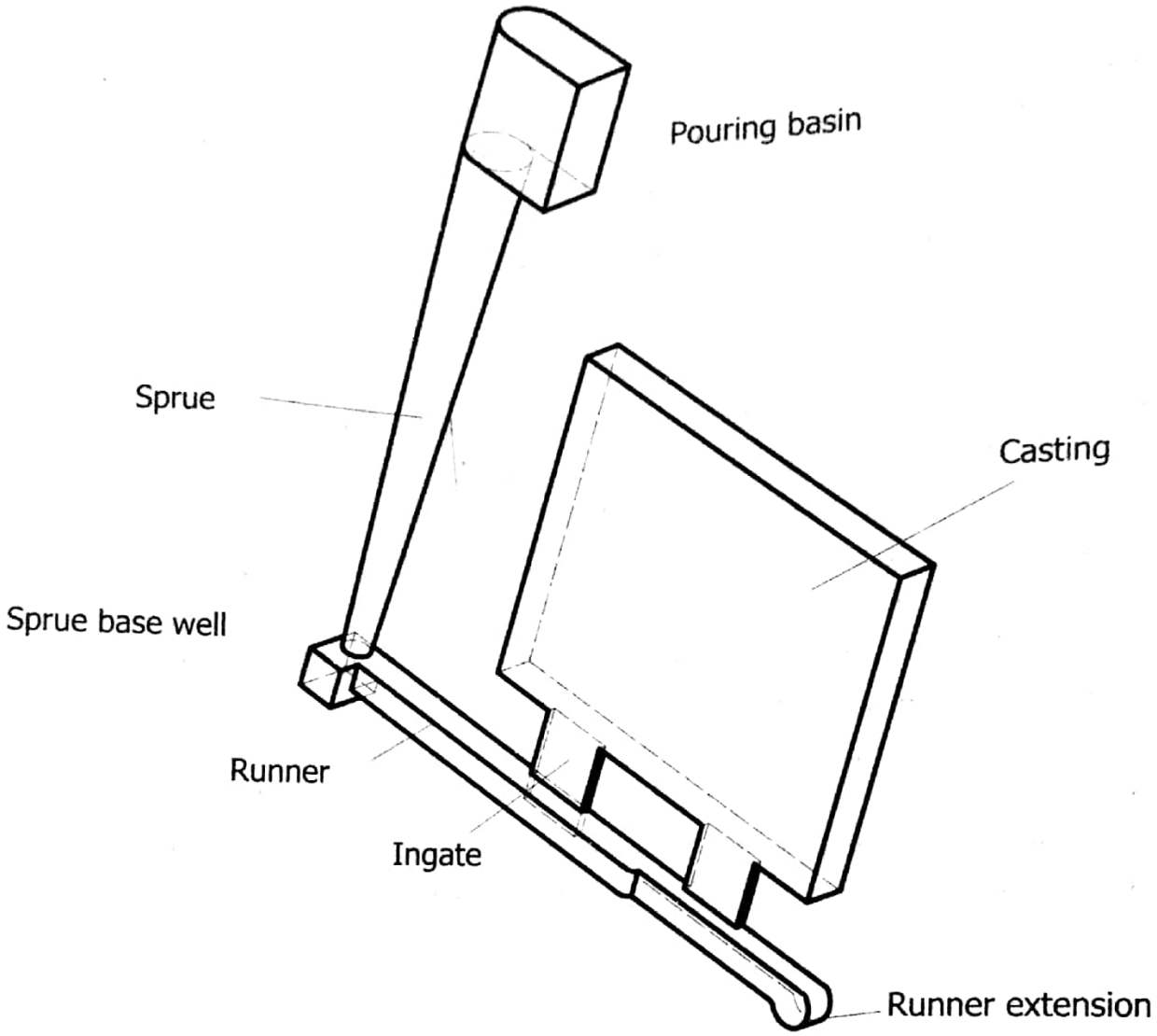

- Suitable for deep casting.
- No turbulence and mould erosion.
- Longer pouring time.
- Unfavourable temperature gradient.
- Large riser required.
- Lower casting yield.

Parting Gate

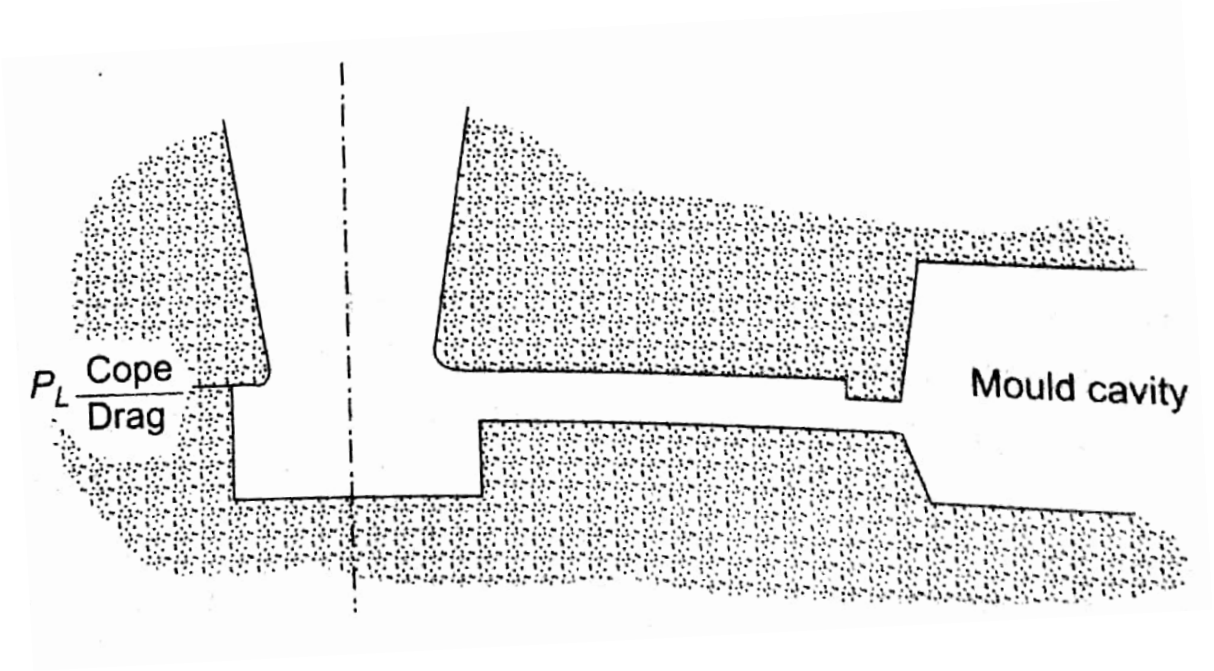

- Most widely used gate.
- Acts as top gate for the mould cavity in drag and as bottom gate for the mould cavity in cope.
- Deeper mould cavity in drag may cause mould erosion, dross formation, and air inclusion.

Step Gate

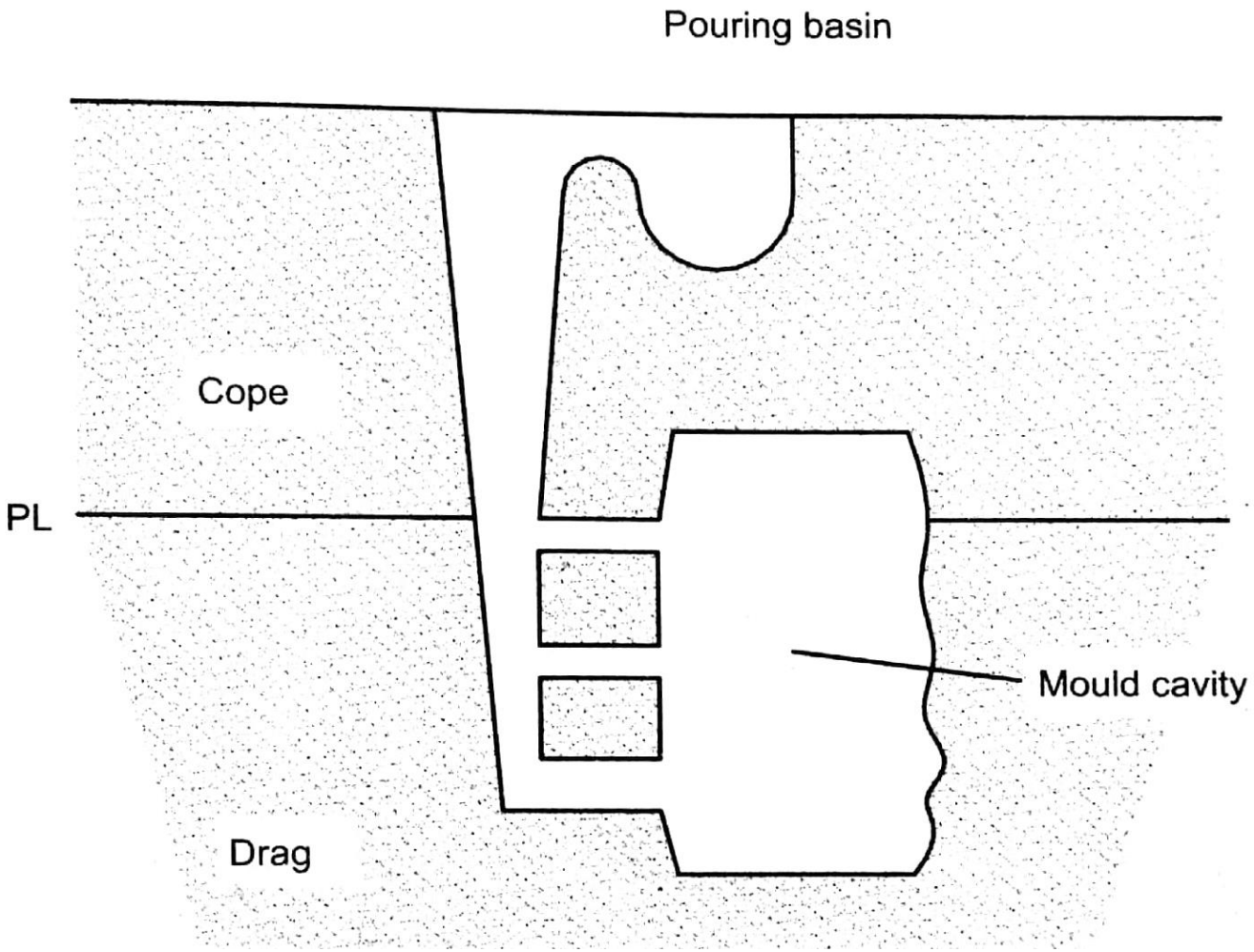

- Used for heavy and large castings.
- Molten metal enters the mould cavity via a number of gates arranged vertically.
- Size of the gates increase with depth.

Gating System Design

- A good gating design ensures distribution of the metal in the mould cavity at a proper rate without excessive temperature loss, turbulence, and entrapping gases and slags.
- Very slow metal flow → solidification starts before complete filling of mould cavity.
- Very fast metal flow → Mould erosion

Pouring time calculation for top gate

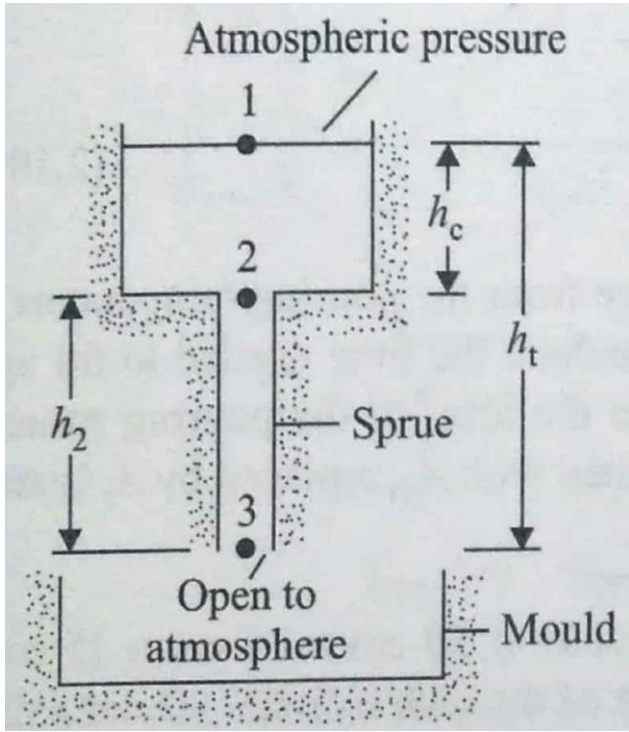

$P_1 = p_3 = p_{atm}$; $v_1 = 0$; Frictional losses are ignored

Apply Bernoulli's between points 1 & 3.

$$\frac{p_1}{\rho} + \frac{v_1^2}{2} + gh_t = \frac{p_3}{\rho} + \frac{v_3^2}{2} + 0$$

$$\rightarrow \quad v_3 = \sqrt{2gh_t}$$

$$Pouring\ time = \frac{V}{A_3 v_3} = \frac{V}{A_g v_g}$$

V = casting volume
$A_g = A_3$ = gate area
$v_g = v_3$ = molten metal velocity at gate

Aspiration effect

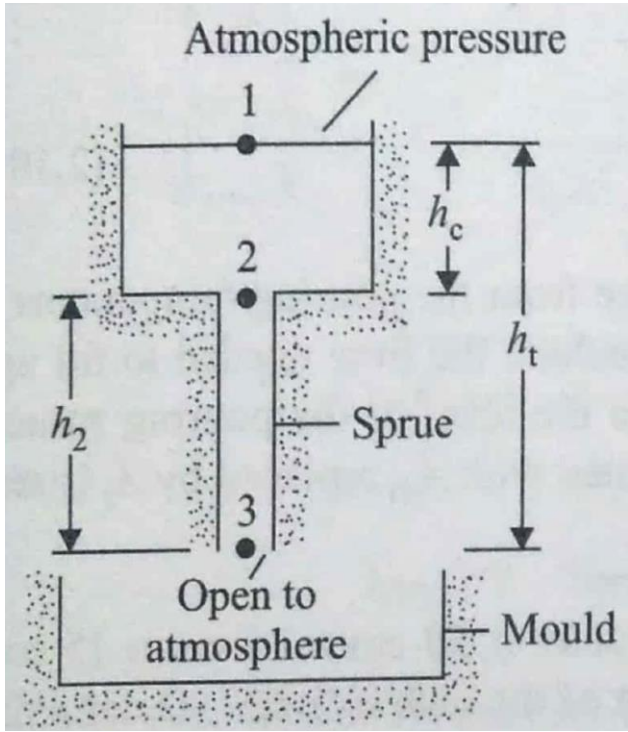

Pressure of molten metal should not fall below atmospheric pressure anywhere. Otherwise, air aspiration will occur in the low pressure zones and cause porous casting.

$P_1 = p_3 = p_{atm}$; $v_1 = 0$; Frictional losses are ignored

Apply Bernoulli's between points 2 & 3.

$$\frac{p_2}{\rho} + \frac{v_2^2}{2} + gh_2 = \frac{p_3}{\rho} + \frac{v_3^2}{2} + 0$$

For cylindrical sprue, $v_2 = v_3$; → $P_2 = -\rho g h_2$

Hence, negative pressure is created for cylindrical sprue.

In the limiting case, $P_2 = 0$; → $\frac{v_2^2}{2} + gh_2 = \frac{v_3^2}{2}$

From continuity eq., $A_3 v_3 = A_2 v_2$; → $v_2 = (A_3/A_2)\, v_3 = R v_3$

→ $\frac{R^2 v_3^2}{2} + gh_2 = \frac{v_3^2}{2}$; → $R = \sqrt{1 - \frac{2gh_2}{v_3^3}}$

Now, $v_3 = \sqrt{2gh_t}$; → $R = \frac{A_3}{A_2} = \sqrt{1 - \frac{h_2}{h_t}} = \sqrt{\frac{h_c}{h_t}}$

→ Sprue should be tapered to avoid negative pressure at point 2.

Pouring time calculation for bottom gate

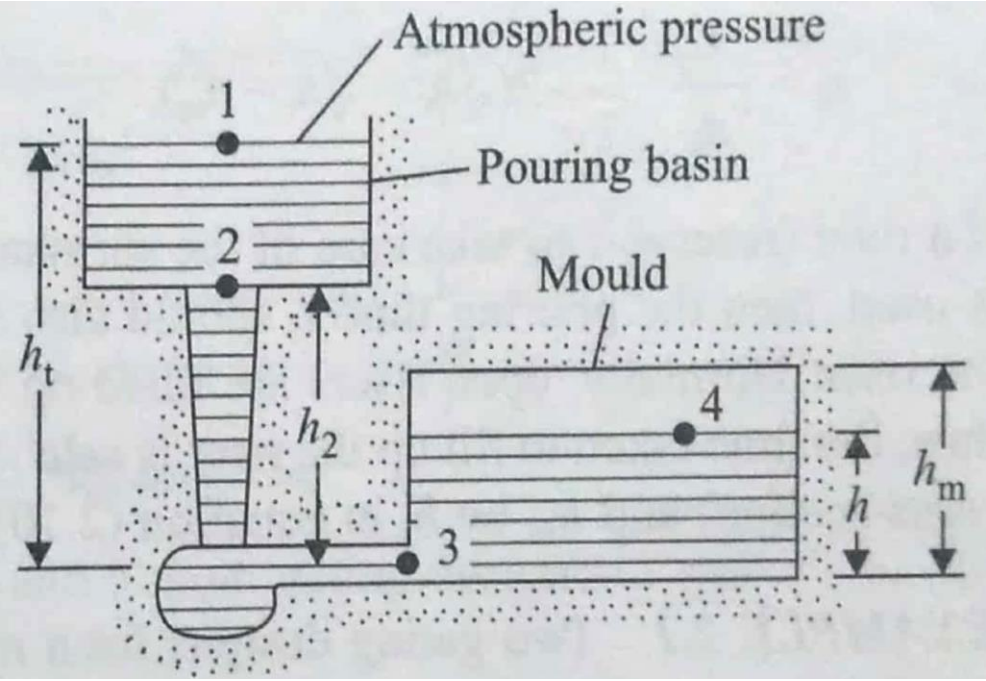

$P_1 = p_4 = p_{atm}$; $v_1 = v_4 = 0$; Frictional losses are ignored

Applying Bernoulli's eq. between points 1 and 3, we get $gh_t = \frac{p_3}{\rho} + \frac{v_3^2}{2}$

Applying Bernoulli's eq. between points 3 and 4, we get $\frac{p_3}{\rho} = gh$

→ $v_3 = v_g = \sqrt{2g(h_t - h)}$

For the instance, let metal level of the mould increase by 'dh' in time 'dt'.

→ $A_m\, dh = A_g\, V_g\, dt$ → $\frac{dh}{v_g} = \frac{A_g}{A_m} dt$ → $\frac{dh}{\sqrt{2g(h_t - h)}} = \frac{A_g}{A_m} dt$

At t = 0, h = 0; At $t = t_f$, $h = h_m$

$$\int_0^{h_m} \frac{dh}{\sqrt{2g(h_t - h)}} = \int_0^{t_f} \frac{A_g}{A_m} dt$$

$$\rightarrow t_f = \frac{A_m}{A_g} \frac{2}{\sqrt{2g}} \left(\sqrt{h_t} - \sqrt{(h_t - h_m)}\right)$$

Riser: Reservoir of molten metal for supply to the mould cavity to compensate the shrinkage of the molten metal in the mould cavity.

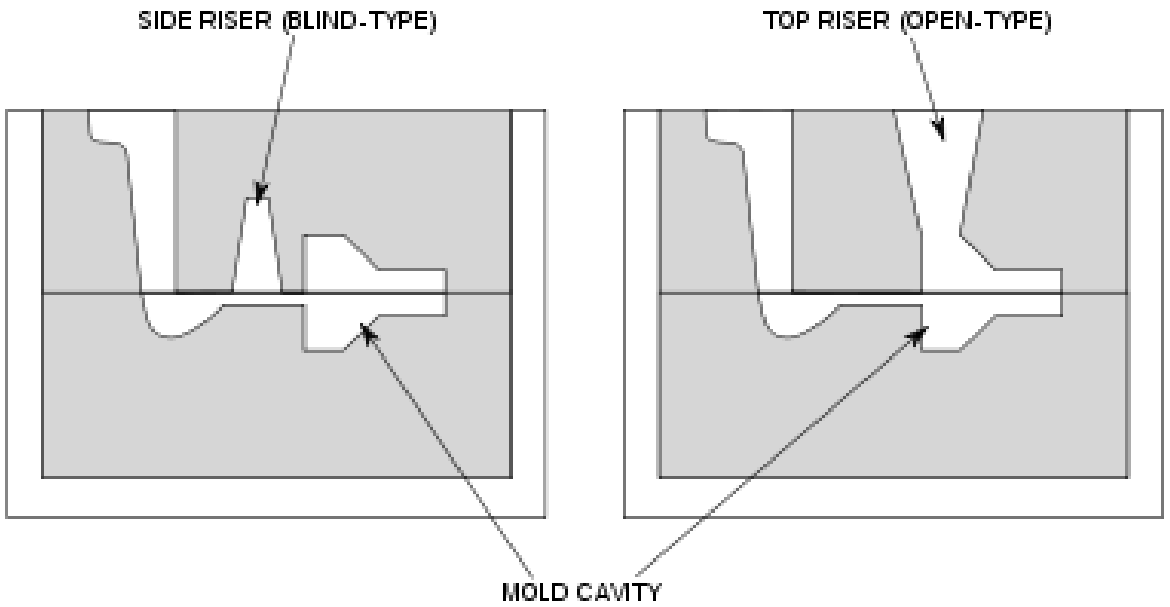

Riser design criteria:

1. Molten metal in riser solidifies after casting
2. Riser volume sufficient to compensate casting shrinkage

Types of riser:

(i) location:
(a) **Top riser** (located on top of the casting, takes less space, shorter feeding distance)
(b) **Side riser** (located on the side of the casting)

(ii) openness to atmosphere
(a) **Open riser** (Open to atmosphere, faster heat loss due to convection and radiation to atmosphere directly through top of the riser)
(b) **Blind riser** (Completely contained in the mould, slower heat loss, smaller than open riser)

(iii) Filling of riser
(a) **Live riser** (riser receives material from the gating system and fills before the mold cavity)
(b) **Dead/Cold riser** (riser fills with material that has already flowed through the mold cavity, larger than live riser)

Riser design

Riser supplies molten metal to the casting to compensate the shrinkage of molten metal during solidification.

Caine's method of riser design

Solidification of casting and riser depends on (V/A) ratio.

Chvorinov rule → Solidification time, $t_s = k(V/A)^2$

k = mould constant, depends on pouring temperature, and thermal characteristics of mould & casting

Freezing ratio, $X = \frac{A_{casting}/V_{casting}}{A_{riser}/V_{riser}}$

Riser should solidify at last. → X > 1

Caine's eq.→ $\boldsymbol{X = \frac{a}{Y-b} + c,}$

where $Y = V_{riser}/V_{casting}$, a,b,c are constants

For steel,	a = 0.10,	b = 0.03,	c = 1.00
For aluminium,	a = 0.10,	b = 0.06,	c = 1.08
Cast iron, brass,	a = 0.04,	b = 0.017,	c = 1.00
Grey cast iron	a = 0.33,	b = 0.03,	c = 1.00
Aluminium bronze,	a = 0.24,	b = 0.017,	c = 1.00
Silicon bronze,	a = 0.24,	b = 0.017,	c = 1.00

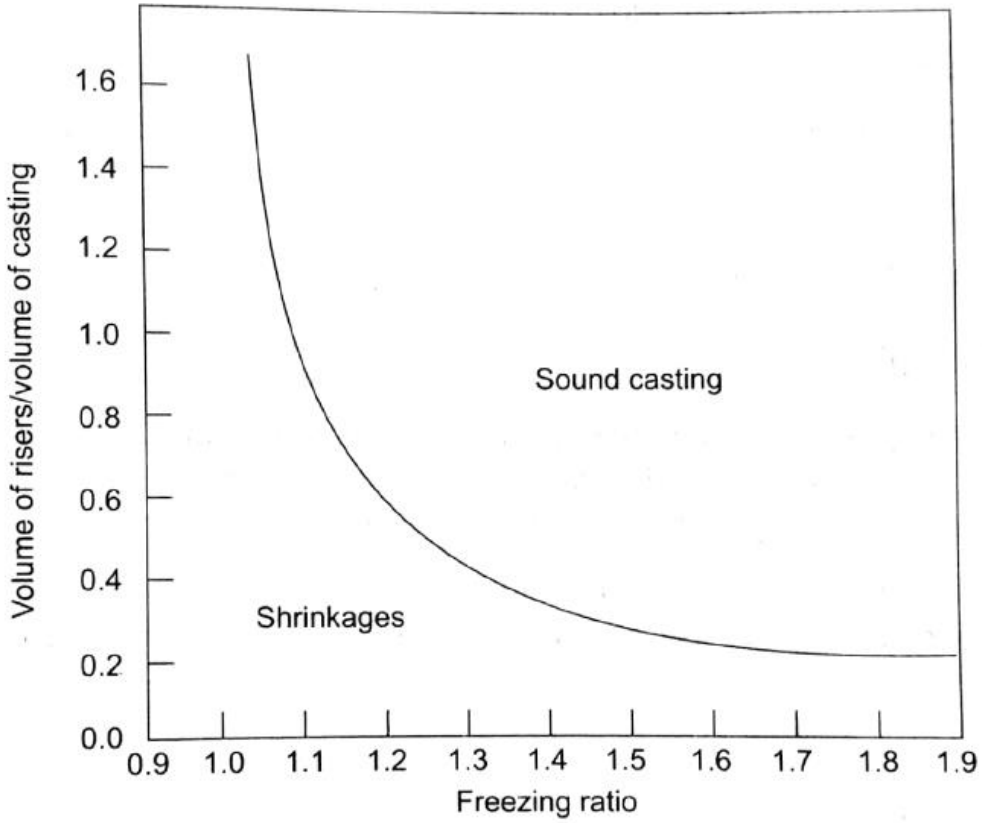

Problem: Calculate the size of a cylindrical top riser (H = D) necessary to feed a steel slab casting 25 cm x 25 cm x 5 cm.

Solution

$V_{casting}$ = 25 x 25 x 5 cm^3 = 3125 cm^3

$A_{casting}$ = 2 x 25 x 25 + 4 x 25 x 5 cm^2 = 1750 cm^2

$V_{riser} = \pi D^2 H/4 = 0.25\pi D^3$ (Since, H = D)

Ariser = $\pi DH + \pi D^2/4 = \pi D^2 + \pi D^2/4 = 1.25\ \pi D^2$

$$X = \frac{A_c/V_c}{A_r/V_r} = \frac{1750/3125}{1.25\pi D^2/0.25\pi D^3} = 0.112D$$

$$Y = V_r/V_c = 0.25\pi D^3/3125 = 0.000251D^3$$

Caine's eq.→ $X = \frac{a}{Y-b} + c$, where Y = $V_{riser}/V_{casting}$, and a,b,c are constants

For steel, a = 0.10, b = 0.03, c = 1.00

→ $0.112D = \frac{0.10}{0.000251D^3 - 0.03} + 1.0$

→ $D^4 - 8.9286D^3 - 119.52D = 2490$

→ **D = 12 cm**

Modulus method of riser design

Modulus of riser, $M_r = V_r/A_r$

Modulus of casting, $M_c = V_c/A_c$

It is empirically found that if $\mathbf{M_r = 1.2M_C}$, then casting is satisfactory.

If, H = D for riser, then

$V_r = \frac{\pi D^3}{4}$ $A_r = \frac{\pi D^2}{4} + \pi D^2$ (top riser)

→ $M_r = V_r/A_r = (\pi D^3/4)/(5\pi D^2/4) = D/5 = 0.2D$

Now, $M_r = 1.2M_c$

→ $0.2D = 1.2M_c$

→ $D = 6M_c$

For the previous example, $M_c = V_c/A_c = 3125/1750 = 1.7857$

→ $D = 6M_c = 10.71$ cm

Moduli of simple geometric shapes

Shape			Modulus, M_c	Shape		Modulus, M_c
Plate	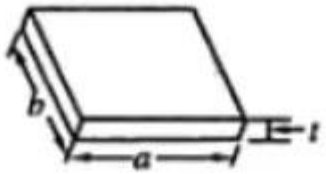	$a \le 5t$	$0.5t$	Sphere		$\frac{D}{6}$
Disc		$d \le 5t$	$0.5t$	Cylinder		$\frac{DH}{2(D+2H)}$
Long bar	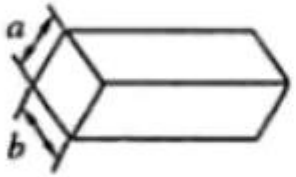		$\frac{a \times b}{2(a+b)}$	Annulus	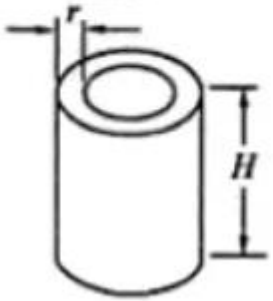	$\frac{rH}{2(r+H)}$
Cube			$\frac{D}{6}$	Any bar with no cooling ends		$\frac{\text{cross-sectional area}}{\text{perimeter of cross section}}$
Cylinder			$\frac{D}{6}$			

Melting Practices

- The quality of casting depends on the method of melting.
- A furnace is used to melt the metal.
- A furnace contains high temperature zone where the metal to be melted is placed.
- Heat in the furnace is created by combustion of fuel, electric arc etc.
- Different types of furnaces for melting – pit furnace, cupola furnace, electric arc furnace, crucible furnace, induction furnace, reverberatory furnace, etc.

Heat required in a furnace

The heat required is the sum of (1) the heat to raise the temperature to the melting point, (2) the heat of fusion to convert it from solid to liquid, and (3) the heat to raise the molten metal to the desired temperature for pouring. This can be expressed as:

$$H = \rho V\{C_s (T_m - T_o) + H_f + C_l (T_p - T_m)\}$$

H = total heat required to raise the temperature of the metal to the pouring temperature (J)

ρ = density of metal (kg/m^3);

C_s = specific heat for the solid metal (J/kg-C)

T_m = melting temperature of the metal (C)

T_o = ambient temperature (C)

H_f = heat of fusion (J/kg)

C_l = specific heat of the liquid metal (J/kg-C)

T_p = pouring temperature (C)

V = volume of metal being heated (m^3)

One cubic meter of a certain eutectic alloy is heated in a crucible from room temperature to 100°C above its melting point for casting. The alloy's density = 7.5 g/cm^3, melting point = 800°C, specific heat = 0.33 J/g°C in the solid state and 0.29 J/g°C in the liquid state; and heat of fusion = 160 J/g. How much heat energy must be added to accomplish the heating, assuming no losses?

Solution: Assume ambient temperature in the foundry = 25°C and that the density of the liquid and solid states of the metal are the same. Noting that one m^3 = 10^6 cm^3, and substituting the property values into Equation (10.1),

$$H = (7.5)\,(10^6)\{0.33(800 - 25) + 160 + 0.29\,(100)\} = 3335(10^6)\ \text{J}$$

Furnace selection

Furnace selection depends on:

- The type of metal
- The maximum temperature required [Higher value of ($T_{pouring} – T_{melting}$) will increase the fluidity of molten metal. However, fuel cost of the furnace will be higher.]
- Quantity of metal to be melted
- Rate of molten metal delivery
- Cost of the furnace
- Fuel cost/ Cost of operation
- Cost of furnace repair and maintenance

Cooling and Solidification of Casting

- Crystal structure and alloy composition at different parts of casting are decided during solidification.
- Improper solidification results in casting defects.

Rate of Solidification

- Estimate of solidification time of casting helps in design and placement of riser.

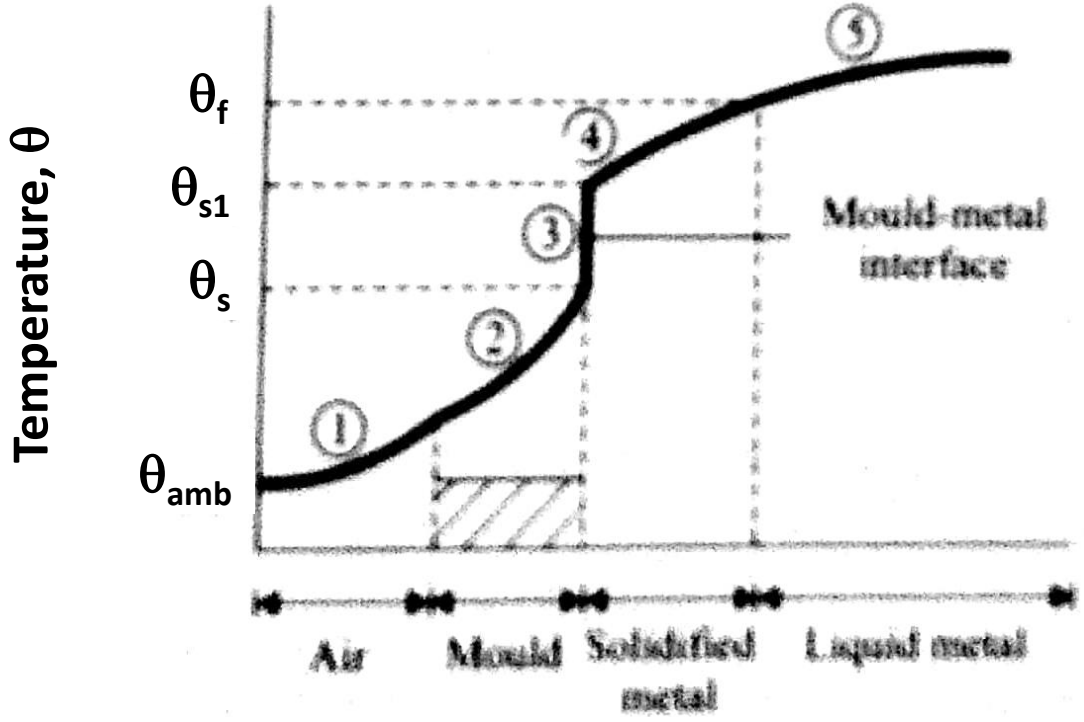

Temperature Distribution in Different Layers

Zone 1 → Heat Loss in the Air

Zone 2 → Heat Loss in the Mould

Zone 3 → Heat Loss in the Mould - Metal Interface

Zone 4 → Heat Loss in the Solidified Metal

Zone 5 → Heat Loss in the Liquid Metal

Solidification of a Large Casting in an Insulating Mould (thermal resistances all zones are negligible w.r.t. **zone2**)

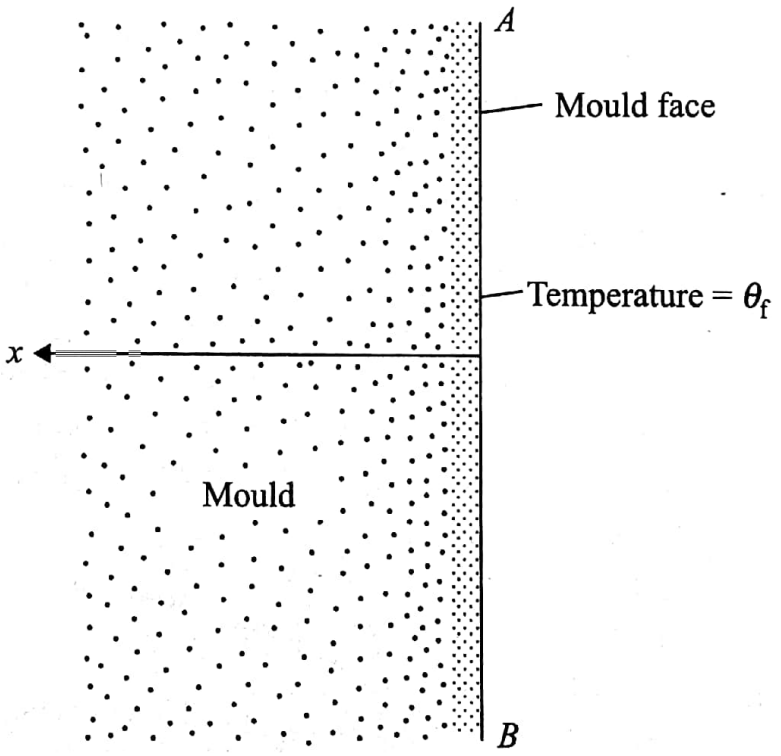

Mould face and coordinate system

- No interfacial thermal resistance → Perfect wetting of mould face by the molten metal.
- Intial temp. of mould → θ_o
- Mould is assumed to be extended up to infinity in x direction.
- Metal just in contact with mould face is assumed to solidify instantaneously. → Mould face temp. is raised to θ_f at t = 0. It is maintained till the completion of solidification.
- Heat conduction through mould is assumed to be 1-D.

Rate of heat transfer through the mould face at any instant *t*

$$\dot{Q} = -kA\left[\frac{\partial\theta_x}{\partial x}\right]_{x=0} = \frac{kA(\theta_f - \theta_0)}{\sqrt{\pi\alpha t}}$$

Total quantity of heat flow up to time t_0 is

$$Q_{t_0} = \int_0^{t_0} \dot{Q}\, dt = \frac{2kA(\theta_f - \theta_0)}{\sqrt{\pi\alpha}}\sqrt{t_0}$$

α = thermal diffusivity of mould material = $k/\rho c$

k = thermal conductivity of mould material

ρ = density of mould material

c = specific heat of mould material

Heat rejected by liquid metal during solidification is

$$Q_R = \rho_m V\left[L + c_m\left(\theta_p - \theta_f\right)\right]$$

where, V = total volume of casting

L = latent heat of solidification of metal

ρ_m = density of metal

c_m = specific heat of metal

$$Q_{t_0} = Q_R$$

$$\rightarrow \frac{2kA\left(\theta_f - \theta_0\right)}{\sqrt{\pi\alpha}}\sqrt{t_0} = \rho_m V\left[L + c_m\left(\theta_p - \theta_f\right)\right]$$

$$\rightarrow t_s = \gamma\left(\frac{V}{A}\right)^2 \qquad \text{where, } \gamma = \left[\frac{\rho_m\sqrt{\pi\alpha}\left\{L + c_m\left(\theta_p - \theta_f\right)\right\}}{2k\left(\theta_f - \theta_0\right)}\right]^2$$

Casting Defects

Major types: **(i) Gas defects - caused by lower gas passing tendency of mould.**

(ii) Shrinkage cavities - caused by liquid metal shrinkage during solidification.

(iii) Moulding material defects - caused by unsuitable properties of moulding materials

(iv) Pouring metal defects - caused by improper pouring of metal into the mould.

(v) Metallurgical defects - caused by improper cooling technique.

Gas defects:

1. Blowholes and open blows: spherical, flattened or elongated cavities on the surface or inside of casting, caused by moisture left in mould and core. Open blows → on casting surface, Blowholes → inside the casting. Main reason is low permeability of mould due to fine sand grains, too much binder, inadequate venting, over ramming of mould.

2. Air inclusion: Air is absorbed in molten metal during melting, in the ladle, or due to faulty gating system. This air is trapped in casting and weakens it. Main reasons are high pouring temp., straight sprue, abrupt bends etc.

3. Pinhole porosity: Cause by H2 gas in the molten metal, which is produced due to dissociation of water in the furnace or mould due to high temperature. Particularly severe in Aluminium alloys.

Moulding material defects:

1. **Cuts and washes:** Areas of rough spot and excess metal in casting caused by mould erosion due to low mould strength and high liquid metal velocity.
2. **Metal penetration:** Metal enters the pores of sand grains causing poor surface finish. Caused due to coarse sand grains, no facing sand/mould wash, higher pouring temp.
3. **Fusion:** Glassy brittle surface of casting due to fusion of sand with metal caused at high pouring temp. of metal. Lower refractoriness of sand may be a reason.
4. **Run out:** Caused due to leakage of molten metal from the mould due to faulty mould making or faulty moulding flask.
5. **Rat tails and buckles:** Caused by compression failure of the skin of the mould at high temp. of molten metal. Buckles are rat tails, which are severe. Improper thermal expansion property of sand, low hot strength of sand are the causes.
6. **Swell:** Under metalostatic forces, mould wall may move back causing a swell in dimension of casting. Proper ramming can solve this problem.
7. **Drop:** Dropping of loose sand or lumps from cope surface into mould cavity causes this problem.

Pouring metal defects:

1. **Misruns and cold shuts:** Misrun is caused when the metal is unable to fill the mould cavity completely.

   Cold shut is caused when two metal streams while meeting in the mould cavity don't fuse together properly.

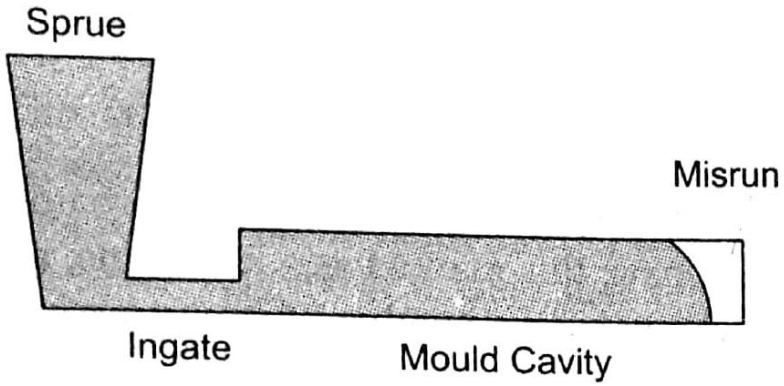

Fig. 5.10 *Misrun*

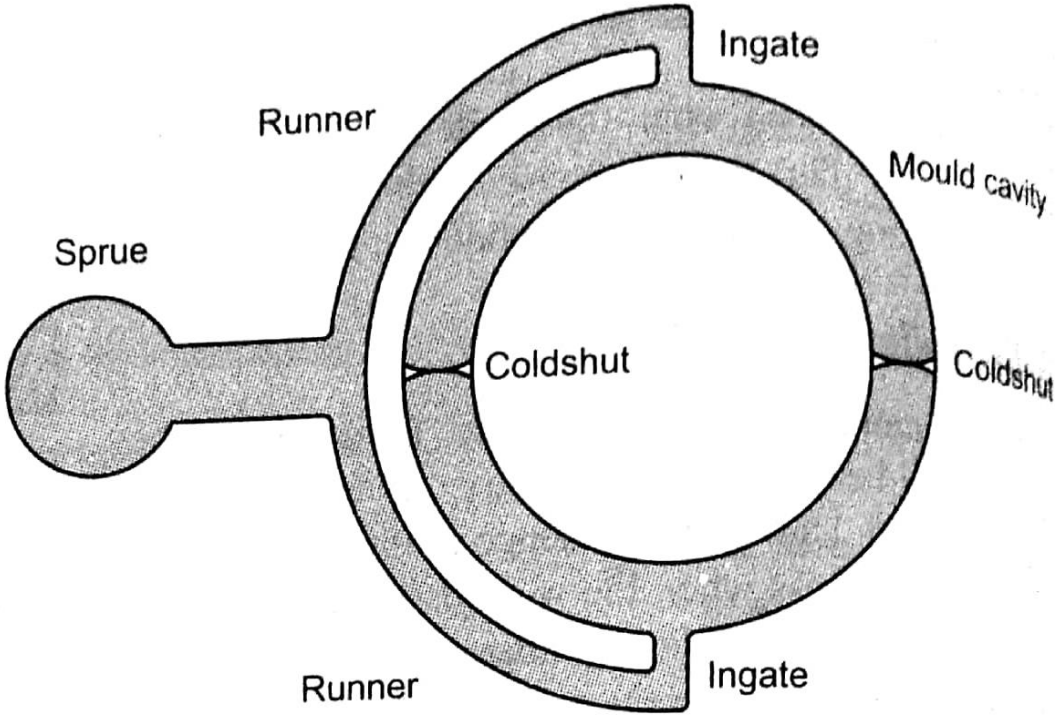

Fig 5.11 *Cold shut*

2. Slag inclusion: Slag should be eliminate from molten metal, otherwise it weakens the casting.

Metallurgical defects:

1. **Hot tears:** Metal strength is low at high temp. Thus, improper cooling may cause high thermal stress, which may lead to rupture of casting.
2. **Hot spot:** These are very hard spots, which are caused by very fast cooling of molten metal.