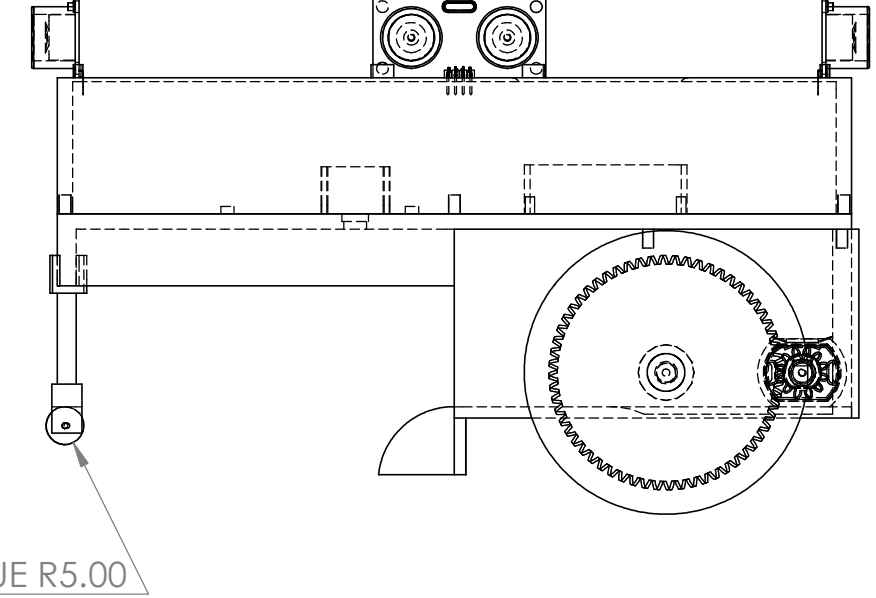

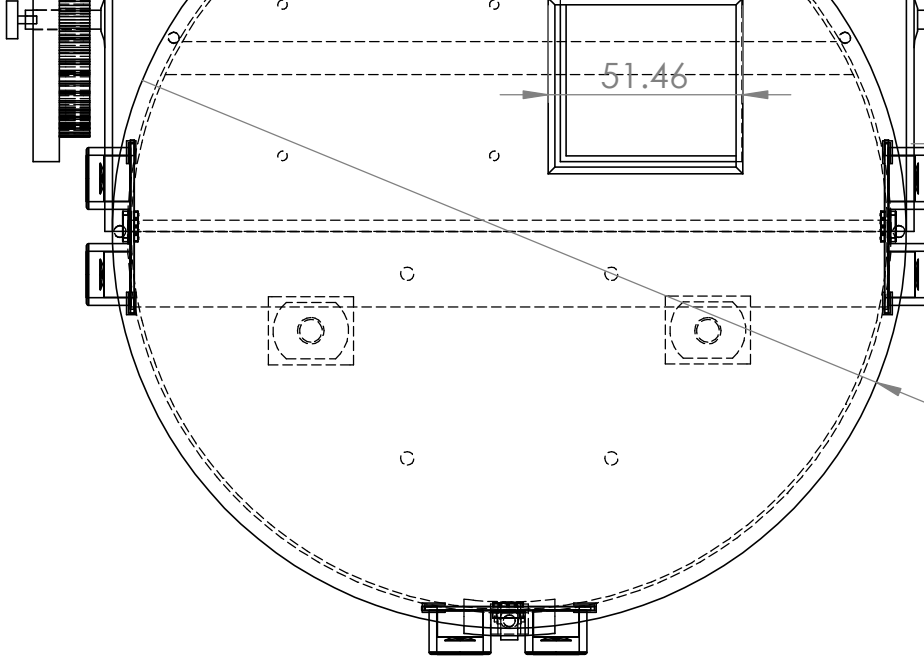

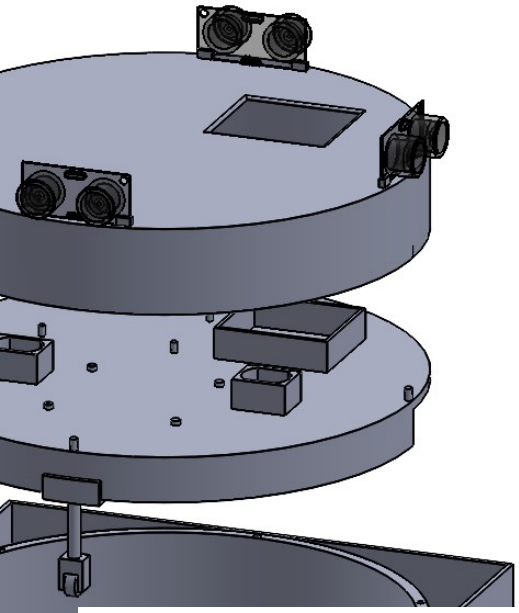

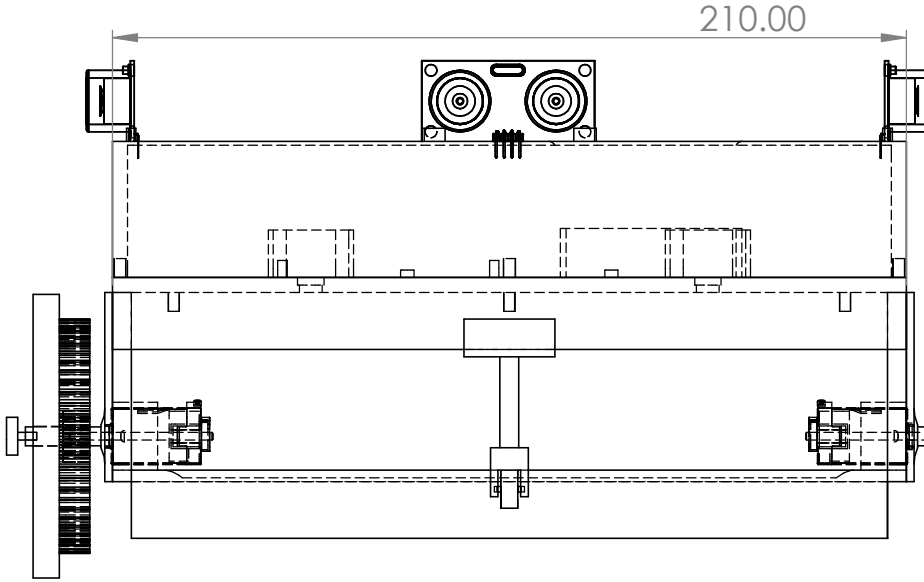

TRUE R37.50

SOLIDWORKS Educational Product. For Instructional Use Only.

UNLESS OTHERWISE SPECIFIED: DIMENSIONS ARE IN MILLIMETERS SURFACE FINISH: TOLERANCES: LINEAR: ANGULAR:	FINISH:			DEBURR AND BREAK SHARP EDGES		DO NOT SCALE D
	NAME	SIGNATURE	DATE			TITLE: