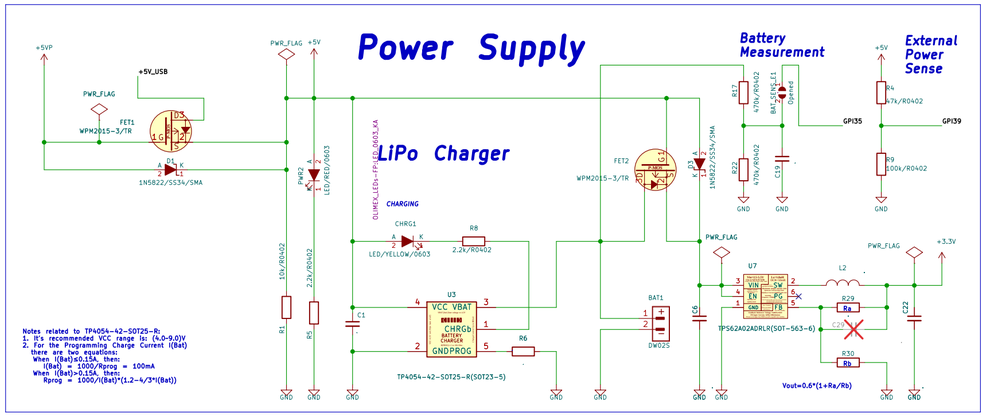

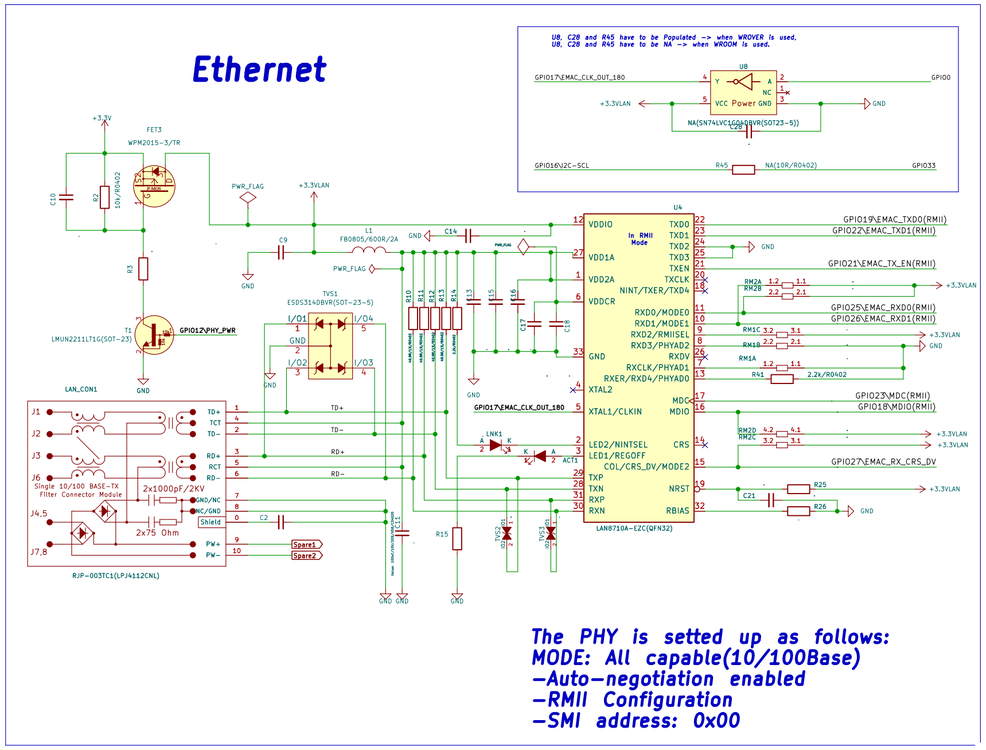

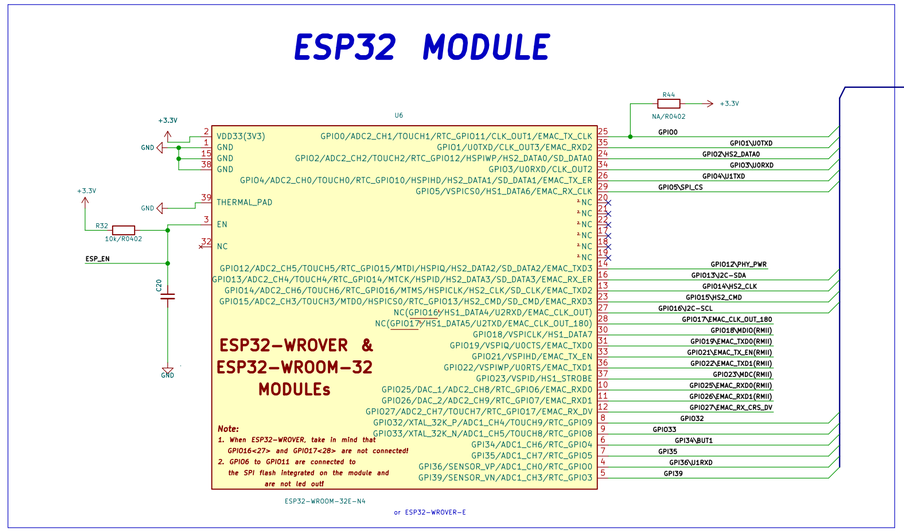

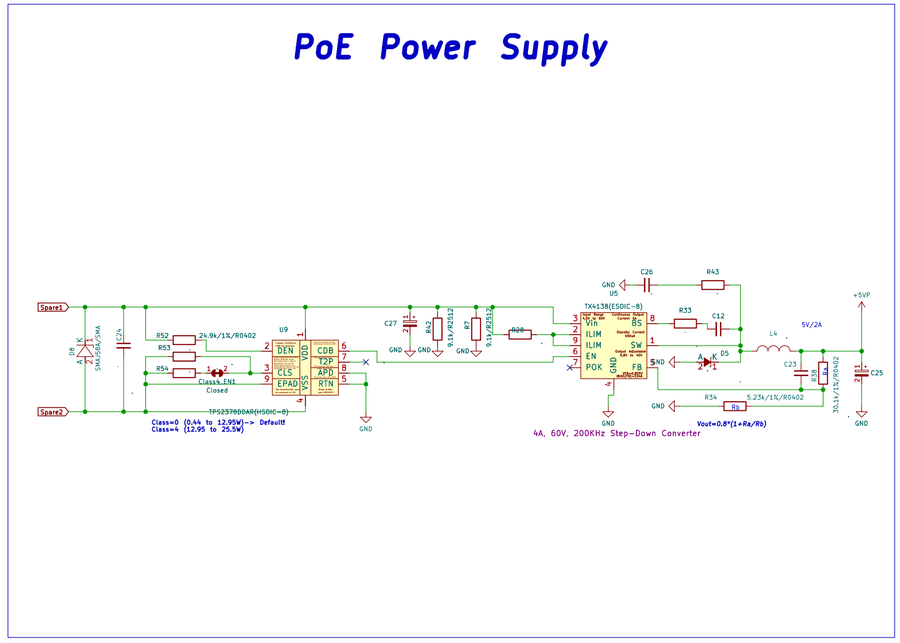

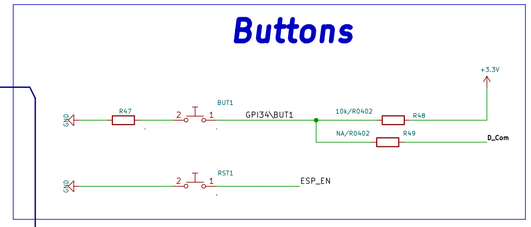

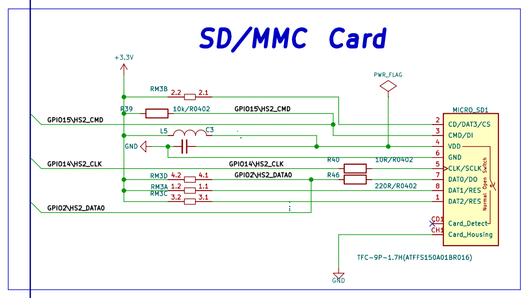

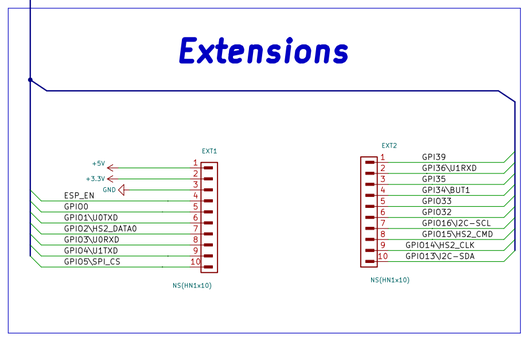

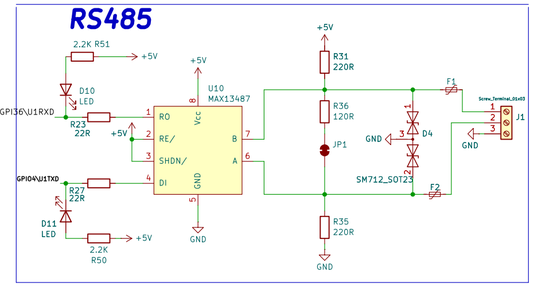

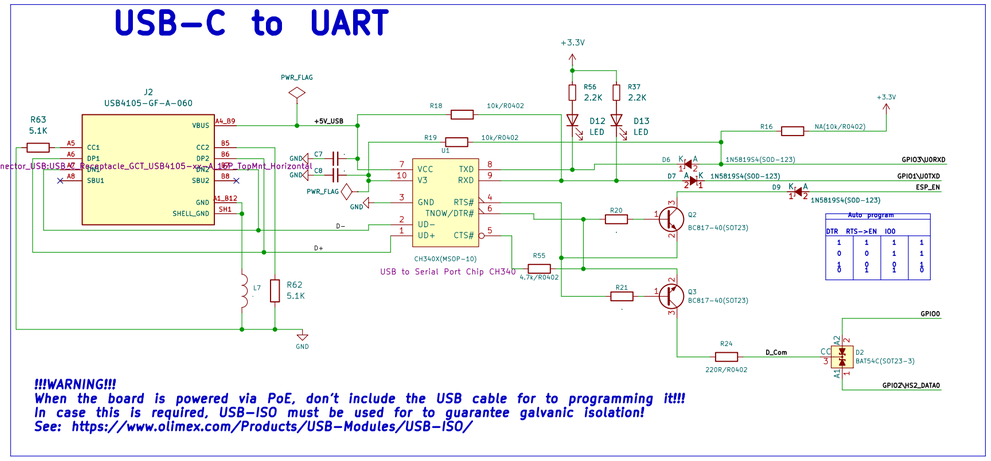

Notes:

Software Selectable Pins

Interface	Signal	Pin
EMAC	EMAC_MDC_out EMAC_MDI_in EMAC_MDO_out EMAC_CRS_out EMAC_COL_out	Any GPIO
I2C	I2CEXT0_SCL_in I2CEXT0_SDA_in I2CEXT1_SCL_in I2CEXT1_SDA_in I2CEXT0_SCL_out I2CEXT0_SDA_out I2CEXT1_SCL_out I2CEXT1_SDA_out	Any GPIO
General Purpose SPI	HSPIQ_in/_out HSPID_in/_out HSPICLK_in/_out HSPI_CS0_in/_out HSPI_CS1_out HSPI_CS2_out VSPIQ_in/_out VSPID_in/_out VSPICLK_in/_out VSPI_CS0_in/_out VSPI_CS1_out VSPI_CS2_out	Any GPIO
For more information refer to esp_wroom_32_datasheet_en.pdf.		

Internal Bootstrapping Resistors

MTDI/GPIO12:	Pull-Down
GPIO0:	Pull-Up
GPIO2:	Pull-Down
GPIO4:	Pull-Down
MTDO/GPIO15:	Pull-Up
GPIO5:	Pull-Up

Bootstrapping Pins Settings

Voltage of Internal LDO(VDD_SDIO)					
Pin	Default	3.3V	1.8V		
GPIO12/MTDI	Pull-Down	0	1		
Booting Mode					
Pin	Default	SPI Flash Boot	Download Boot		
GPIO0	Pull-Up	1	0		
GPIO2	Pull-Down	Don't-care	0		
Debugging Log on U0TXD During Booting					
Pin	Default	U0TXD Toggling	U0TXD Silent		
GPIO15/MTDO	Pull-Up	1	0		
Timing of SDIO Slave					
Pin	Default	Failing-edge:Output	Failing-edge:Input Rising-edge:Output	Rising-edge:Input Failing-edge:Output	Rising-edge:Input Rising-edge:Output
GPIO15/MTDO	Pull-Up	0	0	1	1
GPIO5	Pull-Up	0	1	0	1

Fiducials

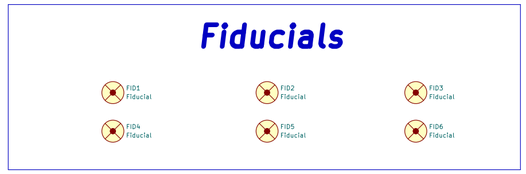

Mounting Holes

KICONEX
https://www.kiconex.com
KICONEX
Sheet: /
File: KIBoxLite_H.kicad_sch

Title: ESP32-PoE

Size: A2	Date: 2026-03-23	Rev: A
KiCad E.D.A. 10.0.0		Id: 1/1