Flow Diagram of Overvoltage and Undervoltage Protection System

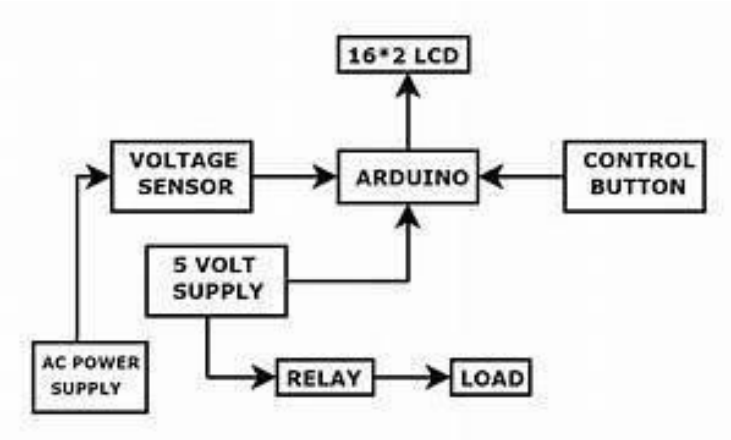

FIG 1.1: Flow Diagram

Circuit Simulation:

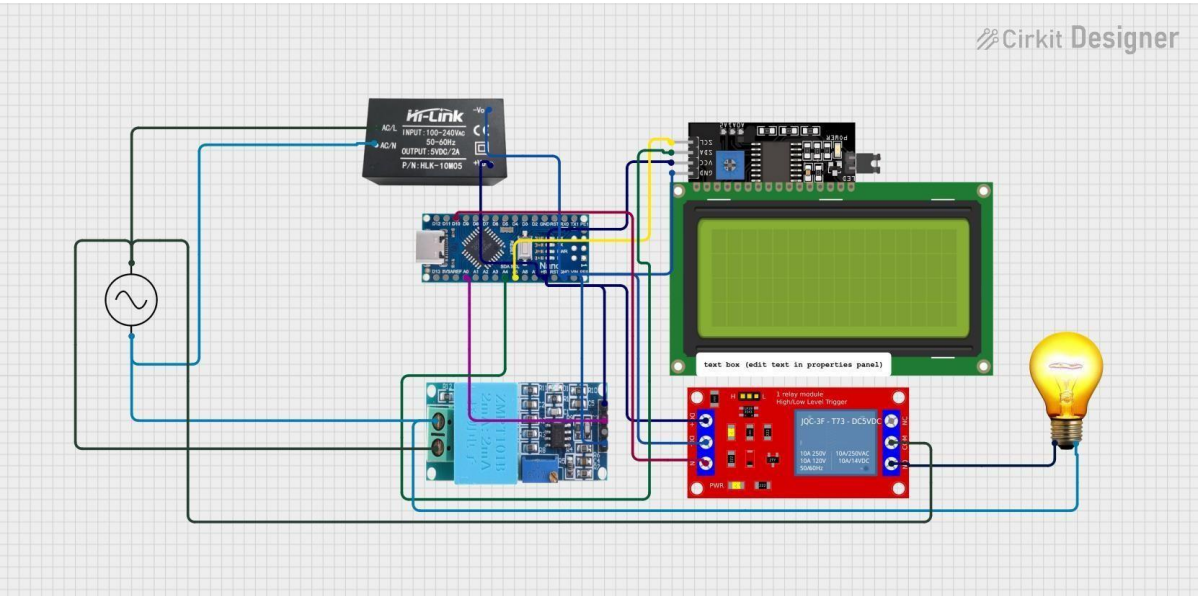

FIG 1.2: Circuit Simulation.

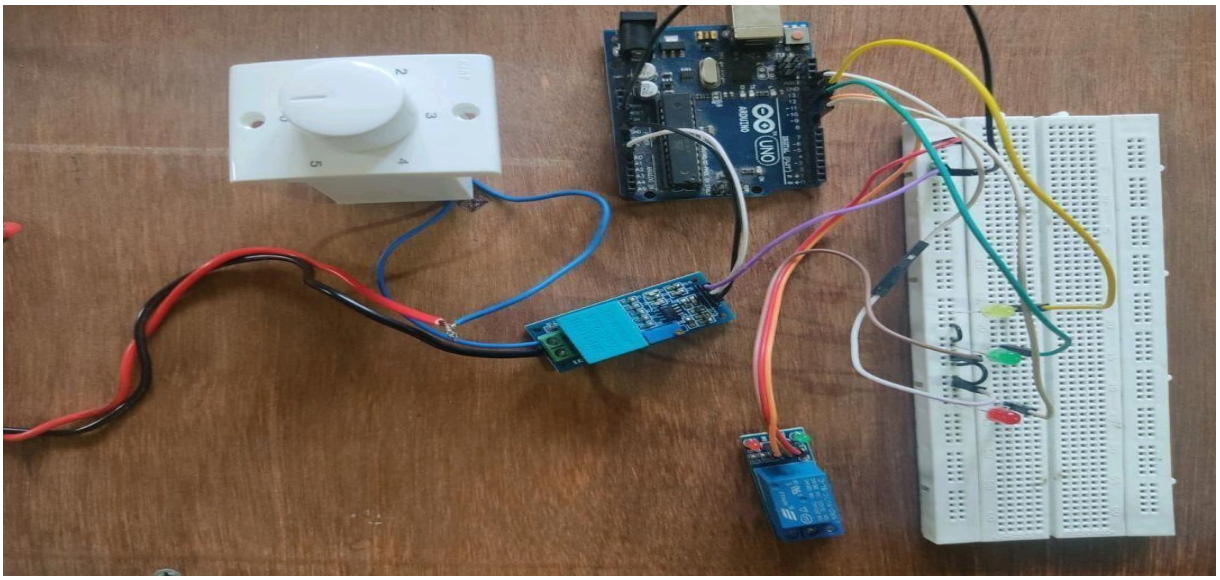

FIG 1.3: AC Overvoltage & Undervoltage Protection & Monitoring System.
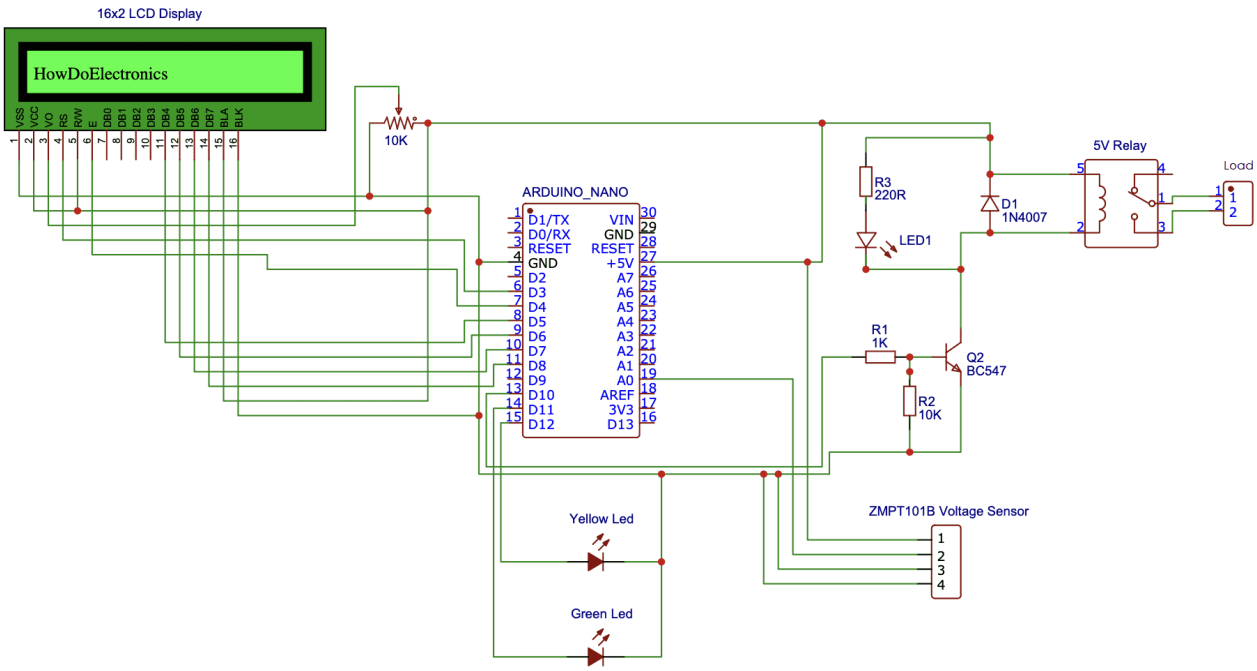
Circuit Diagram: