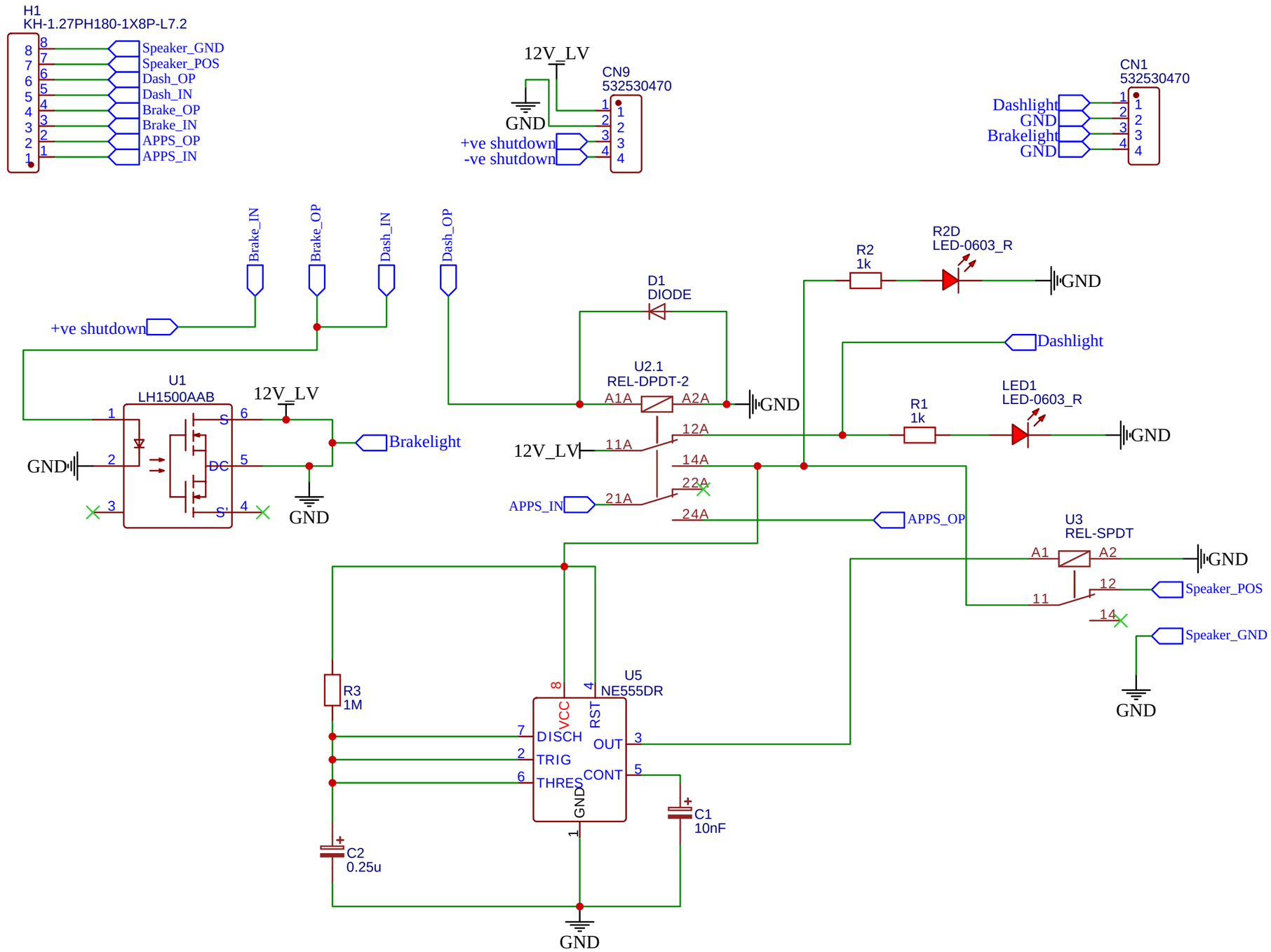

TITLE: RTDS		REV: 1.0
EasyEDA	Company: NITKRacing	Sheet: 1/1
	Date: 2022-06-30 Drawn By: Samiran	