Computer Networks and Internets with Internet Applications, 4e

By Douglas E. Comer

Chapter 11

Extending LANs

Fiber Modems, Repeaters, Bridges and Switches

Topics Covered

- 11.1 Introduction
- 11.2 Distance Limitation And LAN Design
- 11.3 Fiber Optic Extensions
- 11.4 Repeaters
- 11.5 Bridges
- 11.6 Frame Filtering
- 11.7 Startup And Steady State Behavior Of Bridged NW
- 11.8 Planning A Bridged Network
- 11.9 Bridging Between Buildings

Topics Covered (cont)

- 11.10 Bridging Across Longer Distances
- 11.11 A Cycle Of Bridges
- 11.12 Distributed Spanning Tree
- 11.13 Switching
- 11.14 Combining Switches And Hubs
- 11.15 Bridging And Switching With Other Technologies

11.1 Introduction

- Each LAN technology is designed for a specific combination
  - of speed, distance, and cost
- The designer specifies a maximum distance that the LAN can span
  - typical LANs designed to span a few hundred meters
  - LAN technology works best to connect computers within a single building

This chapter:

- discusses mechanisms that can extend a LAN across longer distances
- and uses fiber modems, repeaters, and bridges to illustrate some of the possibilities

11.2 Distance Limitation And LAN Design

- When designing a NW technology, engineers choose a combination
  - of capacity, maximum delay, and distance achieved at a low cost
- The two most popular access mechanisms, CSMA / CD and token passing, each take time proportional to the size of the NW
- To ensure that delays do not become significant
  - a LAN technology works with a fixed maximum cable length
- Another limitation arises because HW is engineered to emit a fixed amount of electrical power
  - a signal gradually becomes weaker as it travels along a copper wire
  - the signal cannot reach arbitrarily far
- To ensure that all stations attached to a LAN receive a sufficiently strong signal,
  - We should calculate the maximum length of wire allowed

11.3 Fiber Optic Extensions

- Variety of ways to extend LAN connectivity
  - Most mechanisms use additional HW components that can relay signals across longer distances
- The simplest mechanism inserts optical fibers and a pair of fiber modems between a computer and a NW
  - Fiber has low delay and high bandwidth
    - the mechanism will operate correctly across distances of several kilometers
    - The most common use is connecting buildings
- Figure 11.1 illustrates usage of fiber modems
- Each of the fiber modems contains HW to perform two chores:
  - electronic circuitry that converts between AUI signals and digital representation
  - and optical driver translates between the digital representation and pulses of light
- Many implementations use a pair of fibers to allow simultaneous transmission in both directions

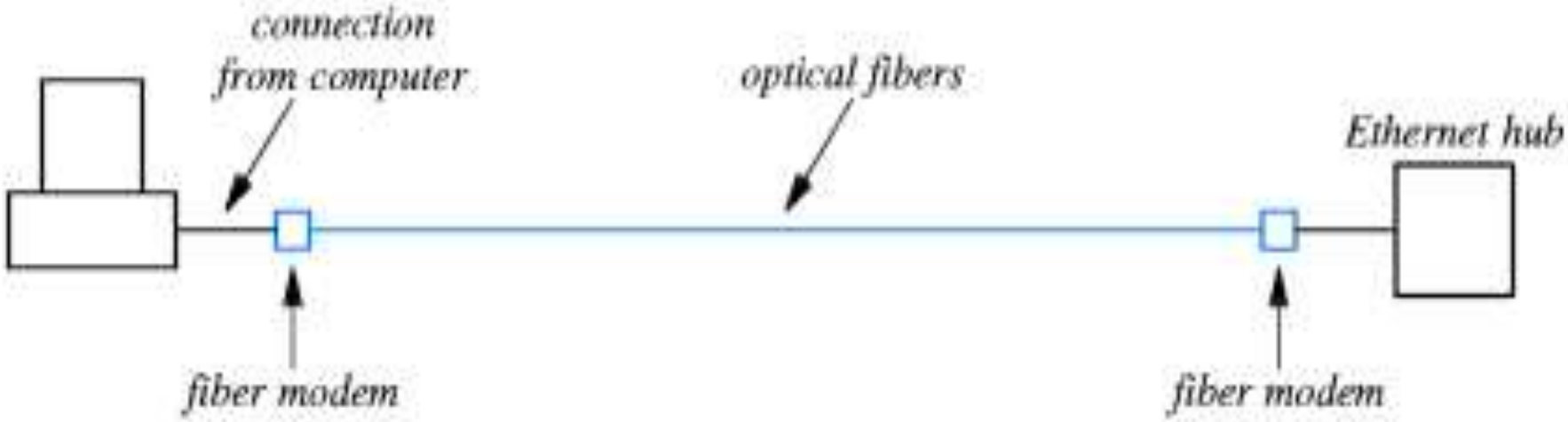

Figure 11.1 Optical fibers and fiber modems used to provide a connection between a computer and a distant Ethernet. The computer and Ethernet hub both use conventional signals.

11.4 Repeaters (1)

- An electrical signal becomes weaker as it travels
- To overcome such limitations, some LAN technologies allow two LANs to be joined together with a device
  - known as a “repeater”
- A repeater is usually an analog electronic device that continuously monitors electrical signals on each LAN
- When it senses a signal on one LAN, the repeater transmits an amplified copy on the other side
- Figure 11.2 illustrates a repeater used with Ethernet
- Repeaters do not understand
  - the frame format, nor do they have physical addresses
- Can an arbitrarily long Ethernet be constructed by using repeaters?
  - The answer is NO
  - Although such an arrangement does guarantee sufficient signal strength, each repeater and segment along the path increases the delay

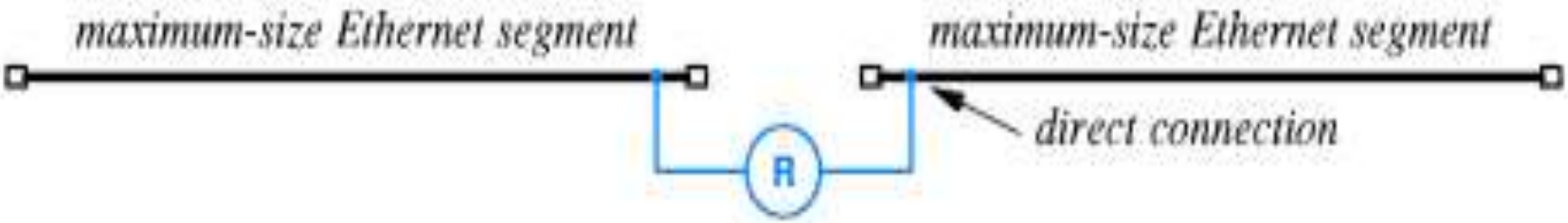

Figure 11.2 A repeater *R* connecting two Ethernets. The repeater connects directly to the cable.

11.4 Repeaters (2)

Repeaters have several drawbacks

- repeaters do not understand complete frames
  - a repeater does not distinguish between a valid frame and other electrical signals
- When a collision/interference occurs on one segment
  - a repeater recreates the signals on the other segment
  - including an overlapping signal that correspond to a collision

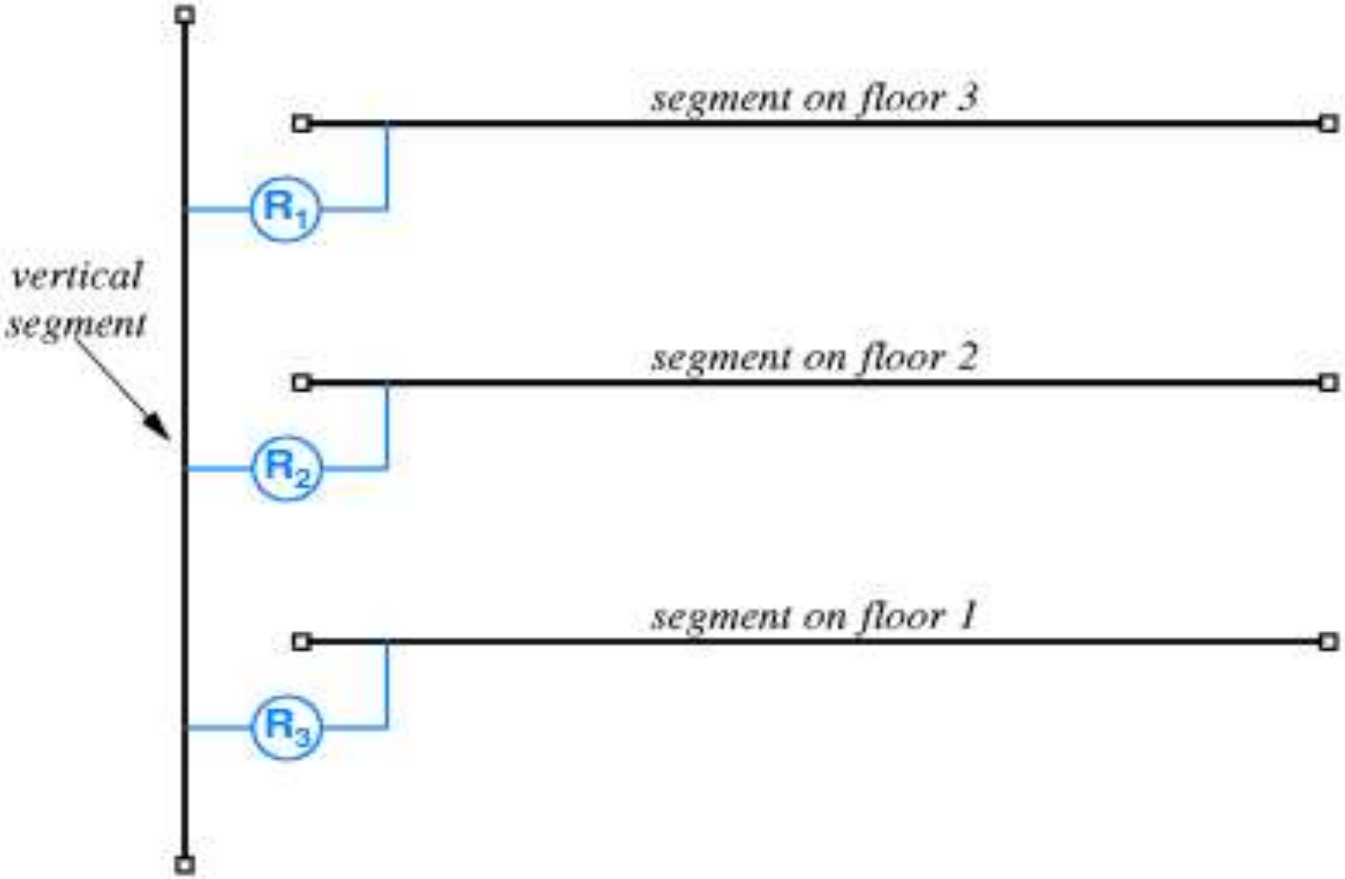

Figure 11.3 Repeaters used to connect Ethernet segments on three floors of an office building. Each floor has one segment, and one segment is placed vertically in the building.

11.5 Bridges

- The bridge listens to traffic on each segment in promiscuous mode
  - When it receives a frame from one segment, the bridge verifies that the frame arrived intact/correct
    - and then forwards a copy of the frame to the other segment if necessary
- Two LAN segments connected by a bridge behave like a single LAN
- Figure 11.4 illustrates the concept
- Bridges are more popular than repeaters
  - because they help isolate problems
    - bridge will not forward a collision from one segment to another
    - bridge keeps problems on one segment from affecting the other

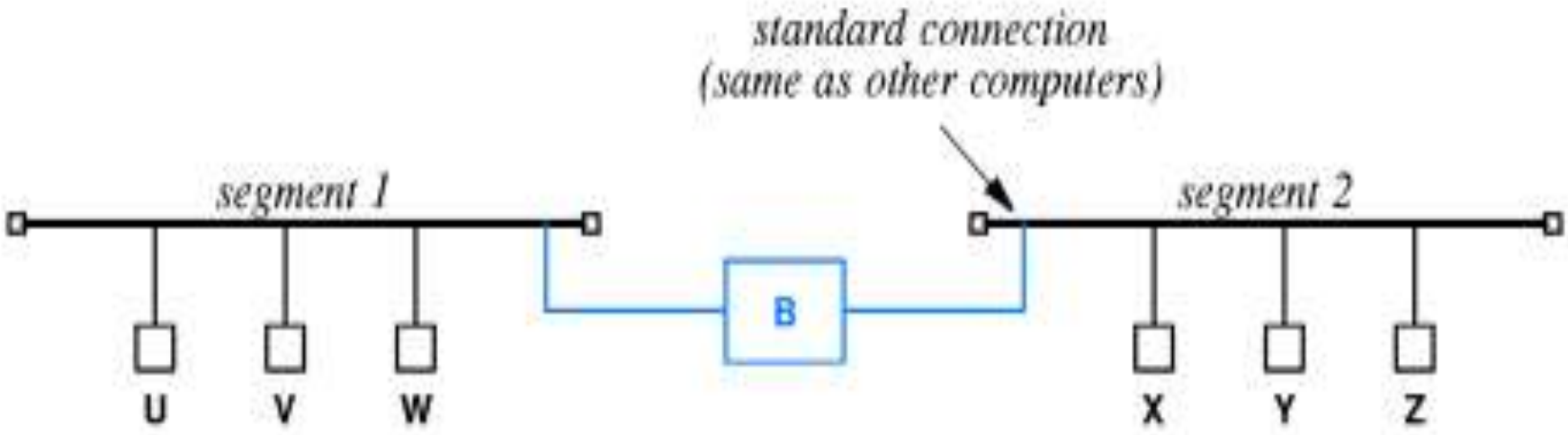

Figure 11.4 Six computers connected to a pair of bridged LAN segments. The bridge, which uses the same type of connection as a computer, always sends and receives complete frames.

11.6 Frame Filtering (1)

- The most valuable function a bridge performs is
  - frame filtering
- A bridge does not forward a frame unless necessary
  - If a computer attached to one segment sends a frame to a computer on the same segment
    - the bridge does not need to forward a copy of the frame
  - if the LAN supports broadcast or multicast
    - the bridge must forward a copy of each broadcast or multicast frame
- When a frame arrives on a segment, the bridge extracts and checks
  - destination address
  - If the bridge knows that the destination computer is attached to the segment over which the frame arrived,
    - the destination will also have received a copy of the transmission, so the bridge can discard the frame
  - If the destination does not lie on the segment over which the frame arrived
    - the bridge must send a copy of the frame on the other segment

11.6 Frame Filtering (2)

How can a bridge know which computers are attached to which segments?

- Most bridges are called adaptive or learning bridge
- Because they learn the locations of computers automatically
  - To do so, a bridge uses source address information in the frames that arrive
  - When a frame arrives, the bridge extracts the physical source address from the frame header
    - and adds the address to a list of computers attached to the segment
- A bridge learns a computer is present on a segment
  - as soon as the computer transmits a frame
- Figure 11 5 illustrates how a bridge can learn

Event	Segment 1 List	Segment 2 List
Bridge boots	–	–
U sends to V	U	–
V sends to U	U, V	–
Z broadcasts	U, V	Z
Y sends to V	U, V	Z, Y
Y sends to X	U, V	Z, Y
X sends to W	U, V	Z, Y, X
W sends to Z	U, V, W	Z, Y, X

Figure 11.5 A sequence of events for the example network shown in Figure 11.4 and the locations of computers that the bridge has learned.

11.7 Startup And Steady State Behavior Of Bridged Networks

- Once a bridge learns which computers attach to each segment
  - the bridge can filter frames
- In the steady state
  - a bridge forwards each frame only as far as necessary
- A bridge does not know which computers attach to which LAN segment when it first boots
- If a computer did not send any frames
  - a bridge could not detect its location
- Fortunately, computers do not usually remain silent
  - A host usually emits at least one frame when the system first boots
  - Furthermore, computer communication is usually bidirectional
    - a computer that receives a frame usually sends a reply
- Therefore, bridges usually learn locations quickly

11.8 Planning A Bridged Network

- How restricting propagation influences design?
  - bridge HW is engineered to permit communication on separate segments at the same time
  - A bridged NW should provide parallelism
    - communication can proceed on each segment at the same time
- NW designers arrange a bridged LAN to optimize performance
  - A set of computers that interact frequently should be attached to the same segment
  - Computers that communicate frequently are often physically close
  - It may be possible to improve the performance of an existing LAN by dividing the LAN into two segments
    - and adding a bridge between them

11.9 Bridging Between Buildings (1)

- Bridges can also be used to span longer distances
  - For example, a corporation may need a NW that allows computers in one building to communicate with computers in another
  - If the two buildings are separated by a significant distance or if the buildings are large
    - a single LAN will not suffice to reach both buildings
    - using pairs of fiber modems to attach all computers to a single LAN may result in high cost or suboptimal performance
  - Figure 11 6 illustrates how fiber modems can be used to bridge LAN segments in two buildings
- Most widely used long-distance bridges are those implemented by
  - a DSL or cable modem as described in the next chapter

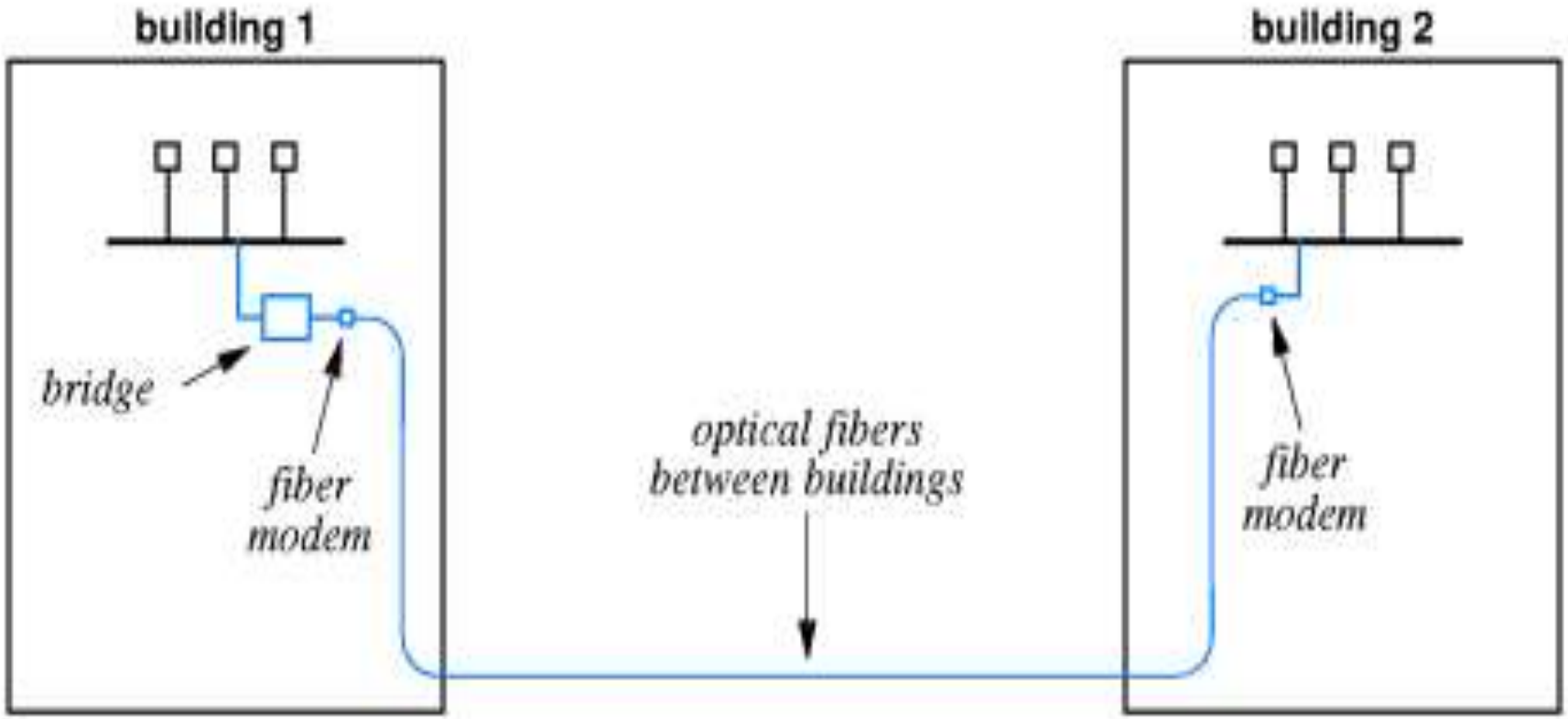

Figure 11.6 A bridge connecting LAN segments in two buildings. An optical fiber is used to connect the bridge to a remote LAN segment.

11.9 Bridging Between Buildings (1)

The use of a bridge in such situations has three primary advantages

- First, because it requires only a single fiber connection,
  - the bridge solution is less expensive than using a separate fiber connection for each individual computer
- Second, because the connection between buildings attaches to the bridge,
  - individual computers can be added or removed from the segments without installing or changing the wiring between buildings
- Third, because a bridge allows simultaneous communication on the two segments,
  - using a bridge instead of a repeater means communication among computers in one building does not impact communication among computers in the other building

11.10 Bridging Across Longer Distances (1)

How can a bridged NW span long distances?

- Two methods are popular
- Each involves a long-distance point-to-point connection and special bridge HW
  - First uses a leased serial line to connect the sites
    - Use of a leased serial line is more common because it is less expensive
  - Second uses a leased satellite channel
    - However, a satellite connection is interesting because it permits communication across an arbitrary distance
- Figure 11.7 illustrates how a bridge can use a satellite

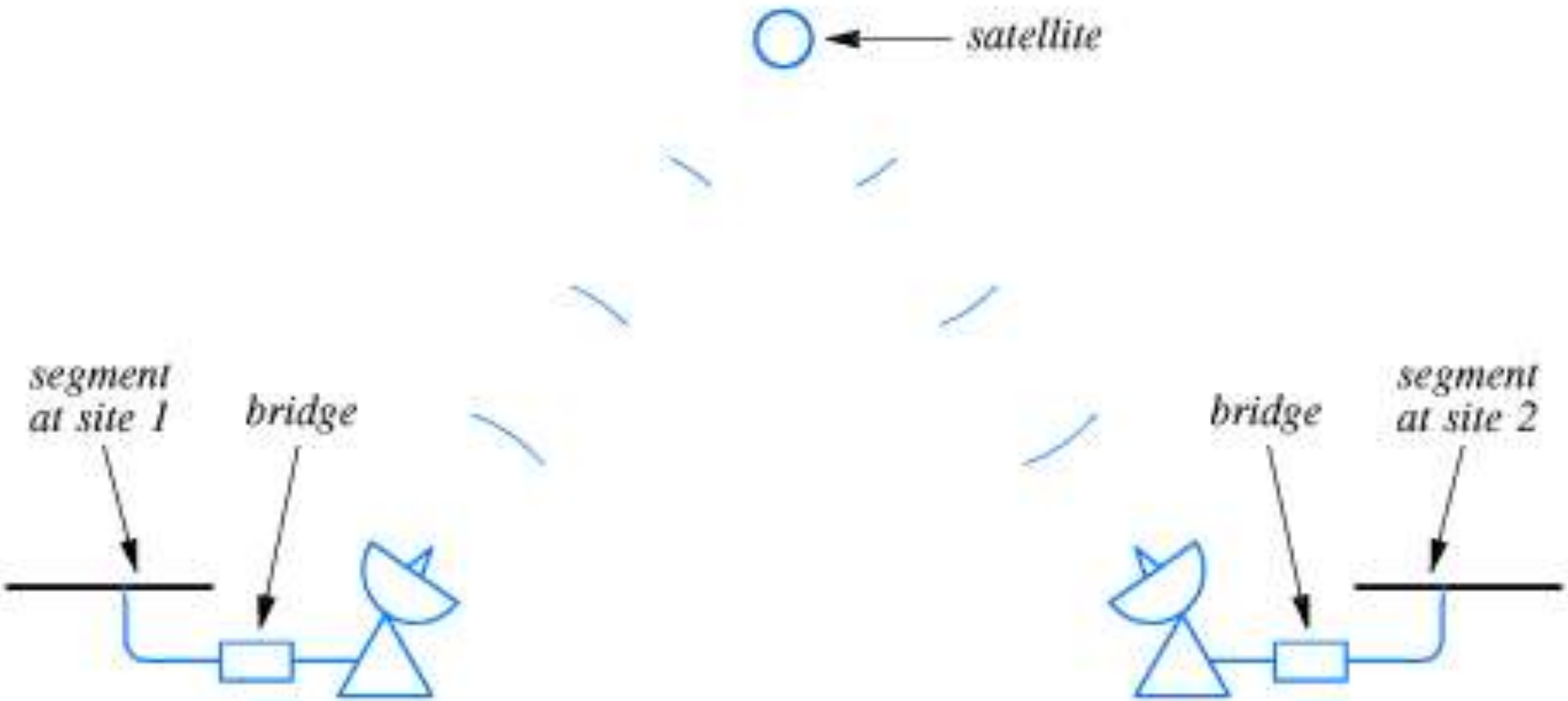

Figure 11.7 A bridge using a leased satellite channel to connect LAN segments at two sites. A satellite bridge can span arbitrary distance.

11.10 Bridging Across Longer Distances (2)

- Filtering at both sites is performed because of BW constraints
- Unlike the optical fiber connection used between buildings
  - bridged LANs connected by leased circuits often use low-BW connections to save cost
  - A typical satellite channel used for bridging operates with much less capacity than a LAN segment
- Bridges HW used with long-distance connections must perform buffering
  - because frames can arrive from the local NW faster than they can be sent across the satellite

11.11 A Cycle Of Bridges

- Abridged NW can span many segments
  - Figure 11.8 shows eight LAN segments
- Although each bridge introduces a small delay
  - the NW will correctly forward a frame from a computer on any segment to a computer on any other segment
- Broadcast works in a bridged environment
  - because a bridge always forwards a copy of a frame sent to the broadcast address
- Not all bridges can be allowed to forward broadcast frames, or a cycle of bridges introduces a problem
  - consider Figure 11.9 which connect four segments
- Unless some bridge is prevented from forwarding broadcasts,
  - copies continue to flow around the cycle forever, with computers on all segments receiving an infinite number of copies

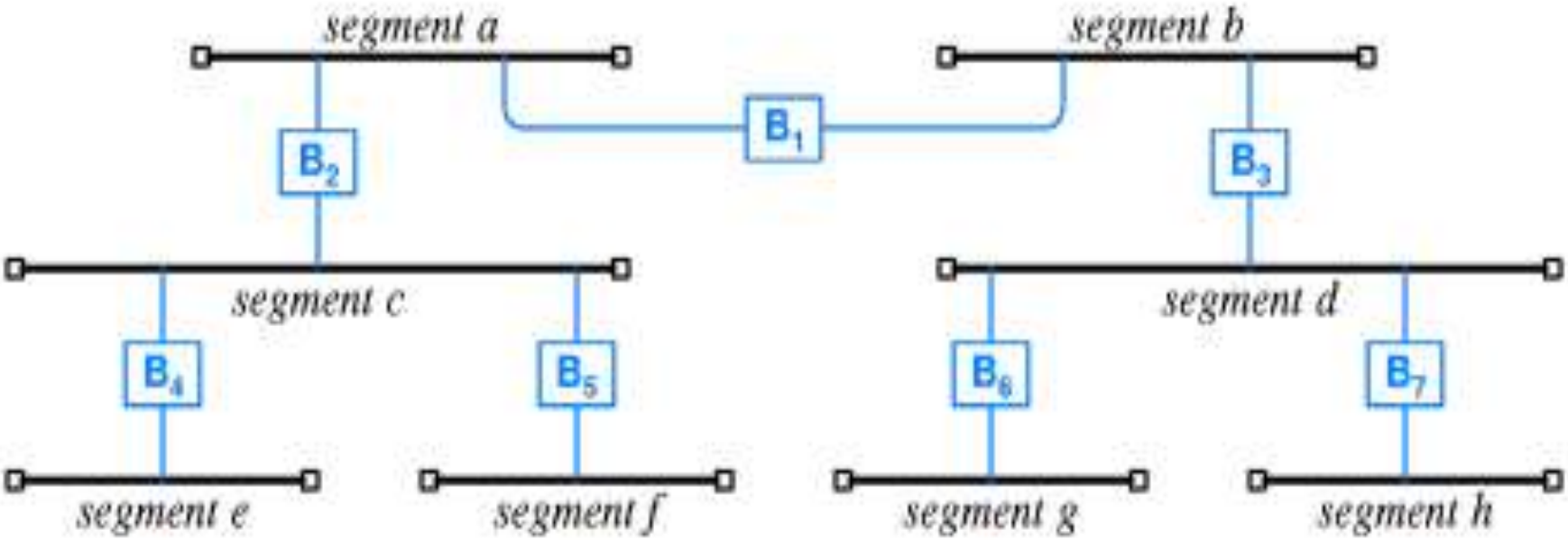

Figure 11.8 A bridged network that consists of eight segments connected by seven bridges. Computers can be attached to any of the segments.

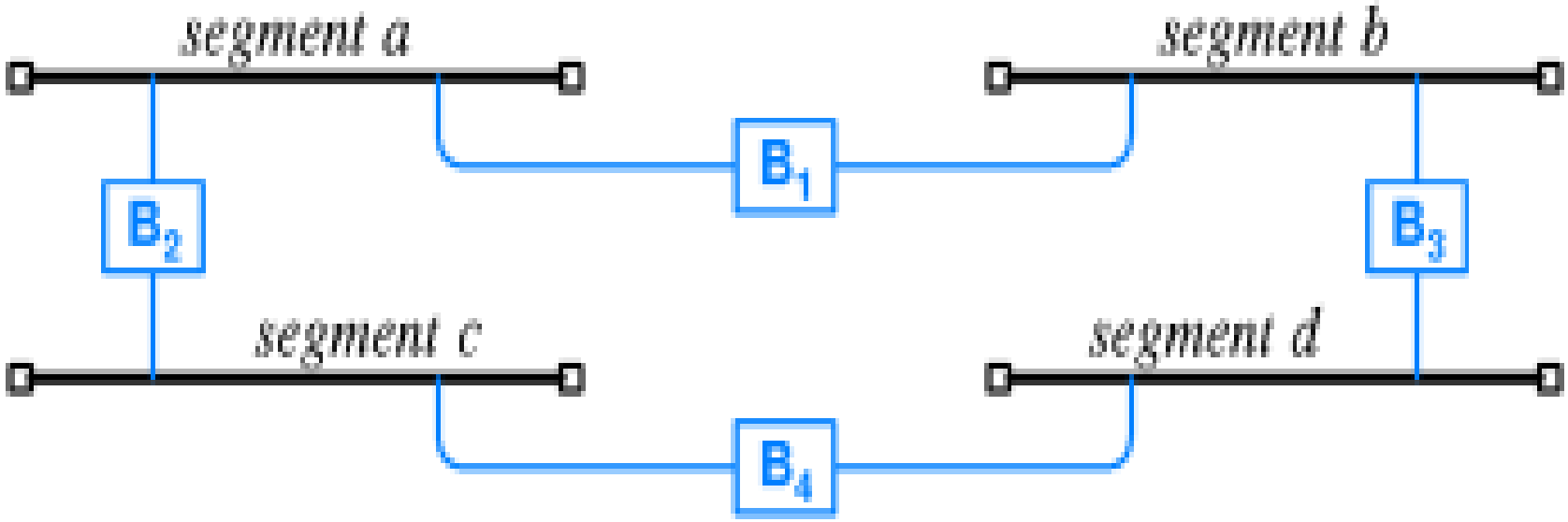

Figure 11.9 An example of bridges connected in a cycle. A problem occurs if all bridges forward broadcast frames.

11.12 Distributed Spanning Tree (1)

- To prevent the problem of infinite loops, a bridged NW must not allow both of the following conditions to occur simultaneously:
  - All bridges forward all frames
  - The bridged NW contains a cycle of bridged segments
- In practice, it can be difficult to prevent accidental cycles from being introduced in a large bridged NW
- Organizations sometimes choose to place extra bridges in a NW to make the NW more immune to failure
- To prevent loops,
  - some of the bridges in a bridged NW must agree not to forward frames

11.12 Distributed Spanning Tree (2)

How can a bridge know whether to forward frames?

- When a bridge first boots
  - it communicates with other bridges on the segments to which it connects
  - In most technologies, a special HW address is reserved for bridges
  - For example, Ethernet bridges communicate using a multicast address reserved exclusively for bridges
- The bridges perform a computation known as the distributed spanning tree (DST) algorithm
  - to decide which bridges will not forward frames
- DST allows a bridge to determine whether forwarding will introduce a cycle
  - In essence, a bridge does not forward frames
    - if the bridge finds that each segment to which it attaches already contains a bridge that has agreed to forward frames
- After the DST algorithm completes, the bridges that agree to forward frames form a graph that does not contain any cycles

11.13 Switching

- A switched LAN consists of a single electronic device that transfers frames among many computers
- The difference between a hub and a switch arises from the way the devices operate:
  - a hub simulates a single shared medium
  - while a switch simulates a bridged LAN with one computer per segment
- Figure 11 10 illustrates internals of a switch
- In a switched LAN, each computer has a simulated LAN segment to itself
  - the segment is busy only when a frame is being transferred to or from the computer

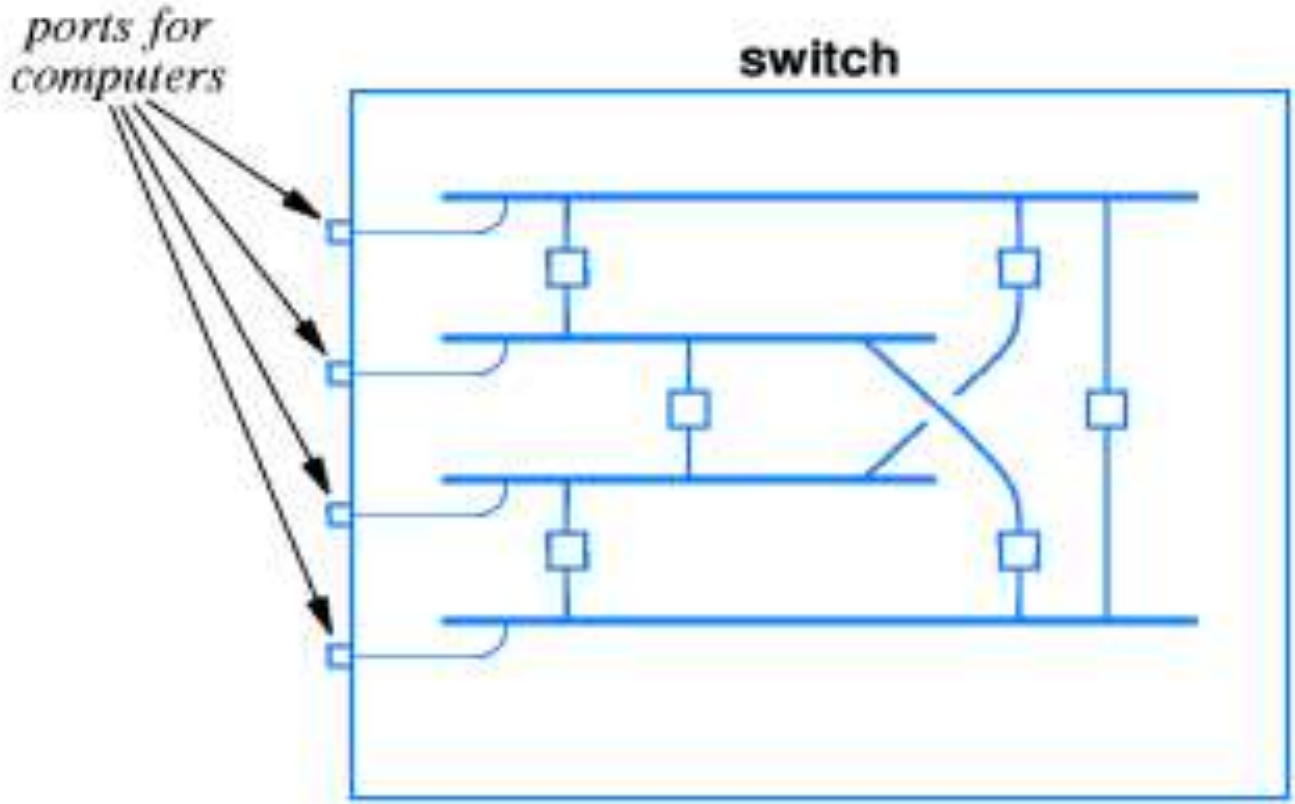

Figure 11.10 The concept underlying a switched LAN. Electronic circuits in the switch provide each computer with the illusion of a separate LAN segment connected to other segments by bridges.

11.14 Combining Switches And Hubs

- Switching provides higher aggregate data rates than a hub, the HW is more expensive than a hub
- To reduce cost, some organizations choose a compromise between the two:
  - Instead of connecting one computer to each port on a switch
    - the organization connects a hub to each port,
    - and then connects each computer to one of the hubs
  - Each hub appears to be a single LAN segment
    - and the switch makes it appear that bridges connect all segments
  - Although a computer must share BW with other computers connected to the same hub
    - communication can occur in parallel between a pair of computers attached to one hub and a pair of computers attached to another hub

11.15 Bridging And Switching With Other Technologies

- General techniques of fiber modems, bridges, and switches are used with other technologies as well
  - In particular, the technique of using fiber modems to connect a computer to a distant LAN has been used with most LAN technologies;
- Hubs are especially important for rings because they can enhance functionality
  - Each computer has a connection to the hub; circuits inside the hub form the logical ring connections
- The switch provides each computer with the illusion of being connected to a private ring (when used with token passing rings)
  - with bridges connecting the rings