Chapter 24.
Congestion Control and Quality of Service

23.1 Data Traffic
23.2 Congestion
23.3 Congestion Control
23.4 Two Examples
23.5 Quality of Service
23.6 Techniques to Improve QoS
23.7 Integrated Services
23.8 Differentiated Services
23.9 QoS in Switched Networks

Traffic Descriptors

- Traffic descriptor are qualitative values that represent a data flow
- **Average data rate** = amount of data/time
- **Peak data rate**: the max. data rate of the traffic
- **Max. burst size**: the max. length of time the traffic is generated at the peak rate
- **Effective bandwidth**: bandwidth that the network needs to allocate for traffic flow

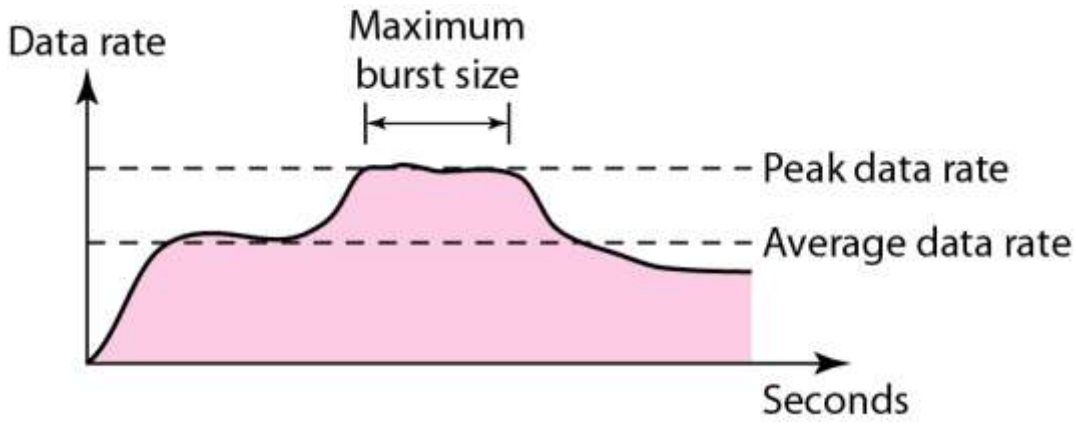

Traffic Profiles

- Constant-bit-rate (CBR)
- Variable-bit-rate (VBR)
- Bursty

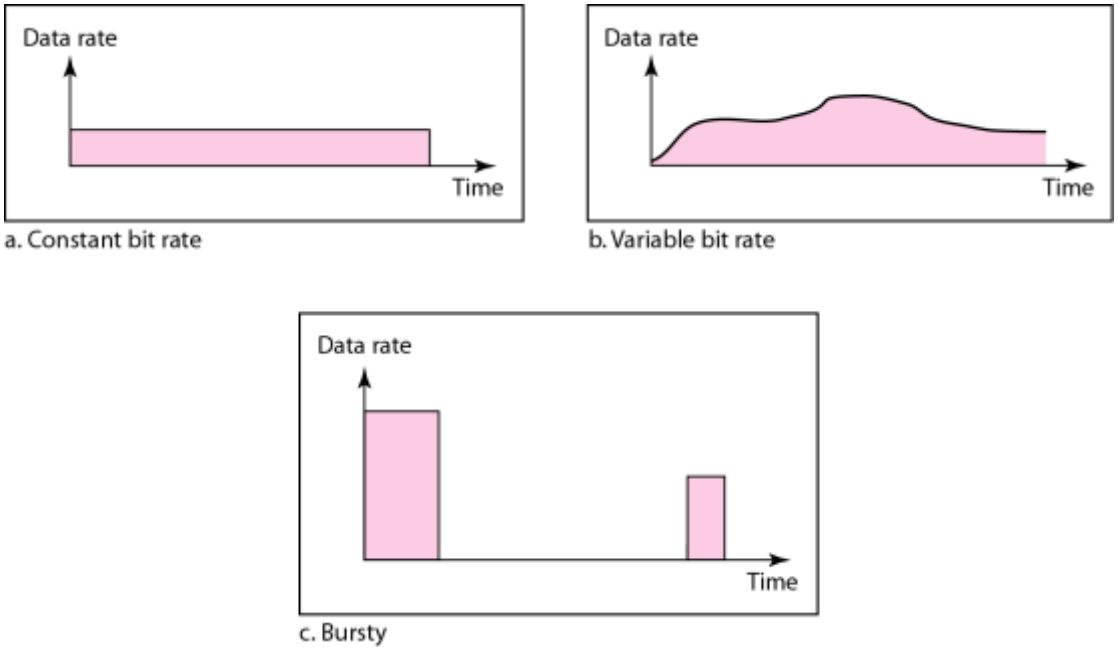

Congestion

- Congestion: the load on the network is greater than the capacity of the network
- Congestion control: the mechanisms to control the congestion and keep the load below the capacity
- Congestion occurs because routers and switches have queues- buffers that hold the packets before and after processing
- The rate of packet arrival > packet processing time → input queue longer
- The packet departure time < packet processing time → output queue longer

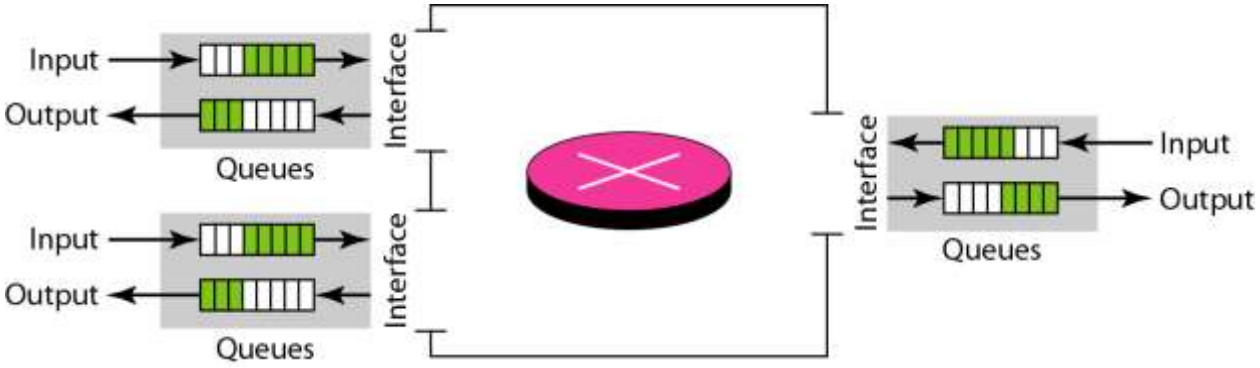

Network Performance-1

- Packet delay versus network load
- Delay id composed of propagation delay and processing delay

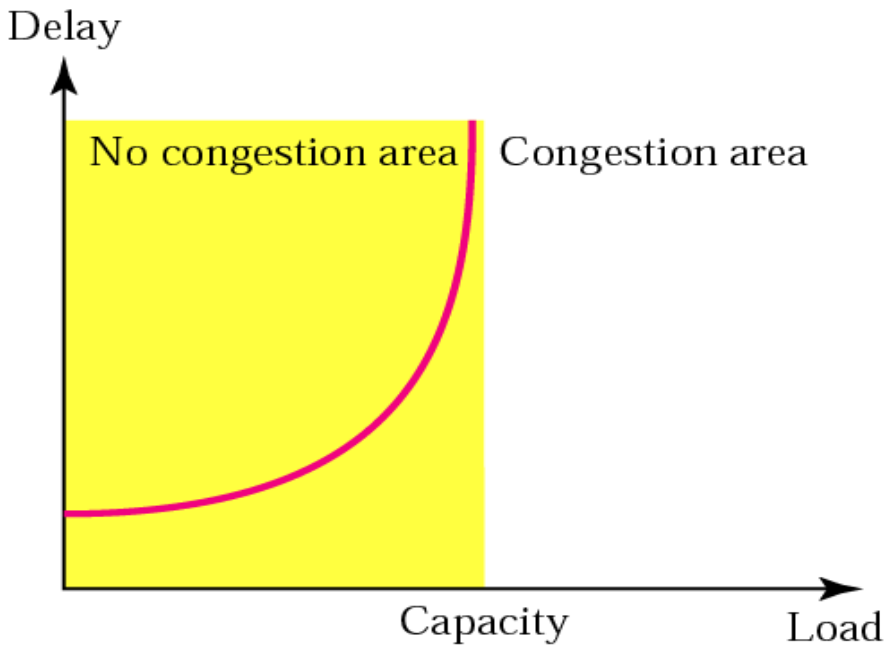

Network Performance-2

- Throughput versus network load
- Throughput: the number of packets passing through the network in a unit of time

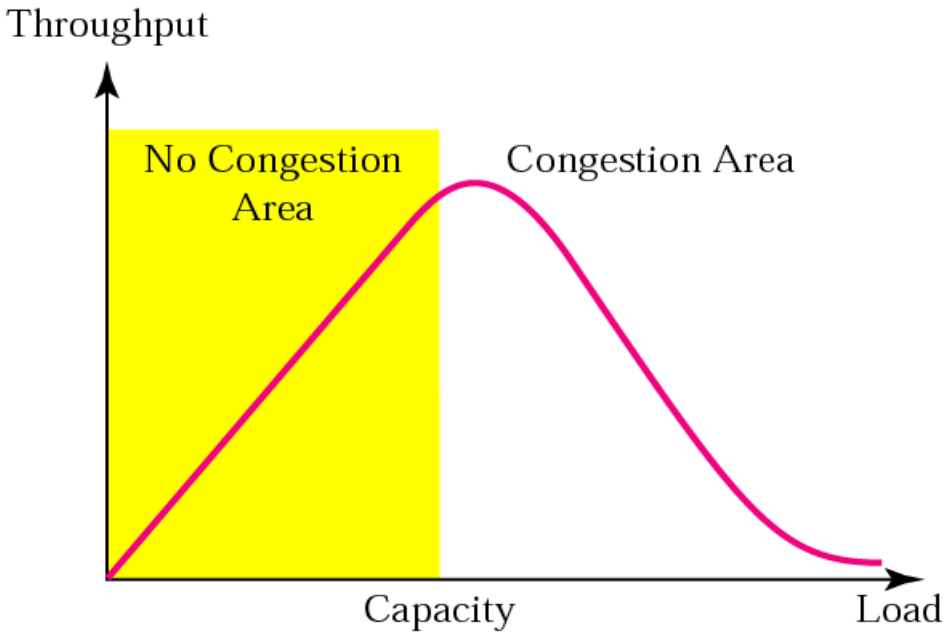

Congestion Control

- Congestion control refers to techniques and mechanisms that can either prevent congestion, before it happens, or remove congestion, after it has happened.

- Two broad categories: **open-loop congestion control** (prevention) and **closed-loop congestion control** (removal).

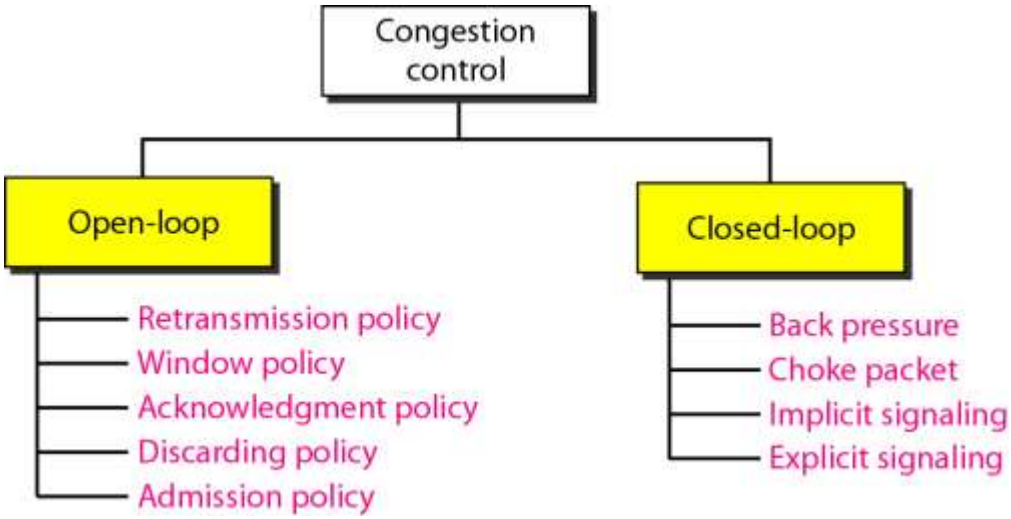

Open Loop Control: Prevention

- ***Retransmission*** policy and timers must to be designed to optimize efficiency and at the same time prevent congestion
- ***Window*** policy: Selective Repeat is better than Go-back-N
- ***Acknowledgement*** policy: does not ACK every packet
- ***Discard*** policy: prevent congestion and at the same time may not harm the integrity of the transmission
- ***Admission*** policy: Switch first check the resource requirement of a flow before admitting it to the network

Closed-Loop Congestion Control: Removal

- ***Back pressure***: inform the previous upstream router to reduce the rate of outgoing packets if congested
- ***Choke point***: a packet sent by a router to the source to inform it of congestion, similar to ICMP's source quench packet
- ***Implicit signaling***: slow down its sending rate by detecting an implicit signal concerning congestion
- ***Explicit signaling***: Backward signaling / Forward signaling

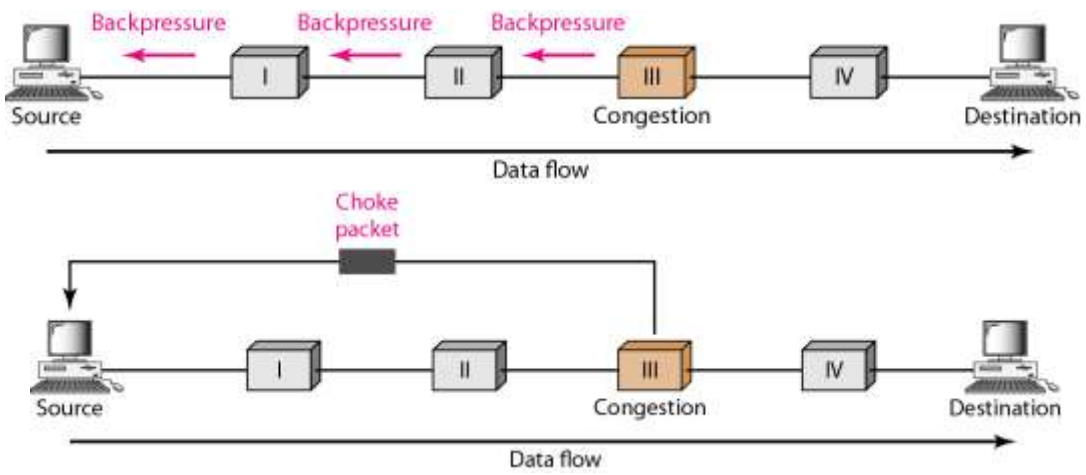

Congestion Control in TCP

- TCP assumes that the cause of a lost segment is due to congestion in the network.
- If the cause of the lost segment is congestion, retransmission of the segment does not remove the cause—it aggravates it.
- The sender has two pieces of information: the receiver-advertised window size and the congestion window size
- TCP Congestion window
  - *Actual window size = minimum (rwnd, cwnd)*
    (where rwnd = receiver window size, cwnd = congestion window size)

TCP Congestion Policy

- Based on three phases: slow start, congestion avoidance, and congestion detection
- **Slow Start: Exponential Increase**
  - In the slow-start algorithm, the size of the congestion window increases exponentially until it reaches a threshold

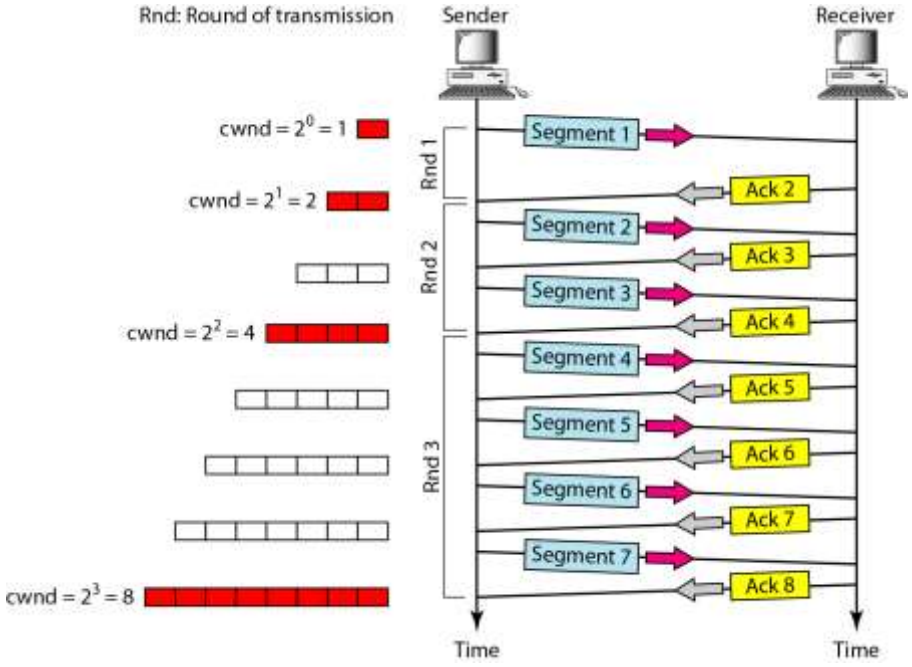

TCP Congestion Policy

- **Congestion Avoidance: Additive Increase**
  - The size of the congestion window increases additively until congestion is detected

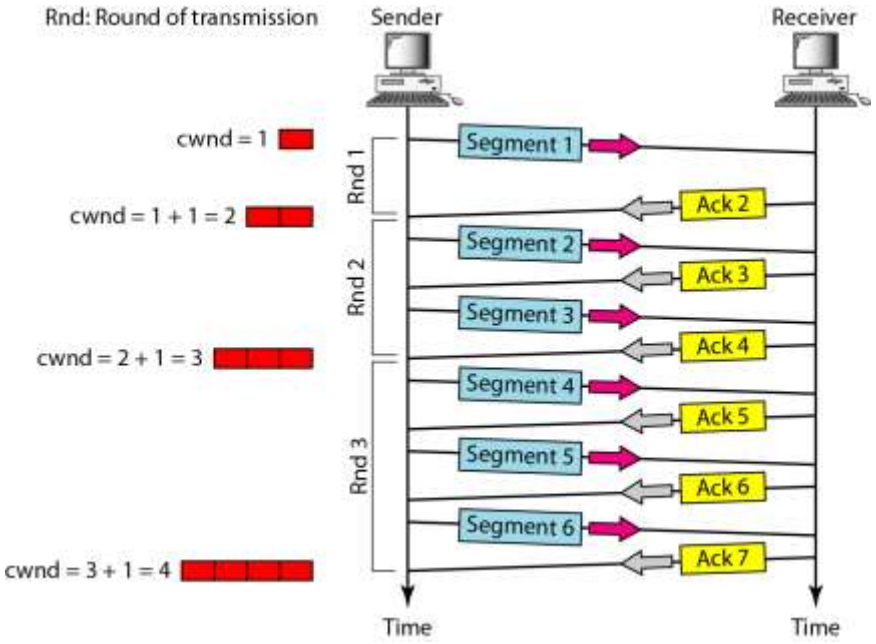

TCP Congestion Policy

- **Congestion Detection: Multiplicative Decrease**
- An implementation reacts to congestion detection in one of two ways:
  - If detection is by time-out, a new slow start phase starts
  - If detection is by three ACKs, a new congestion avoidance phase starts
- **Summary**

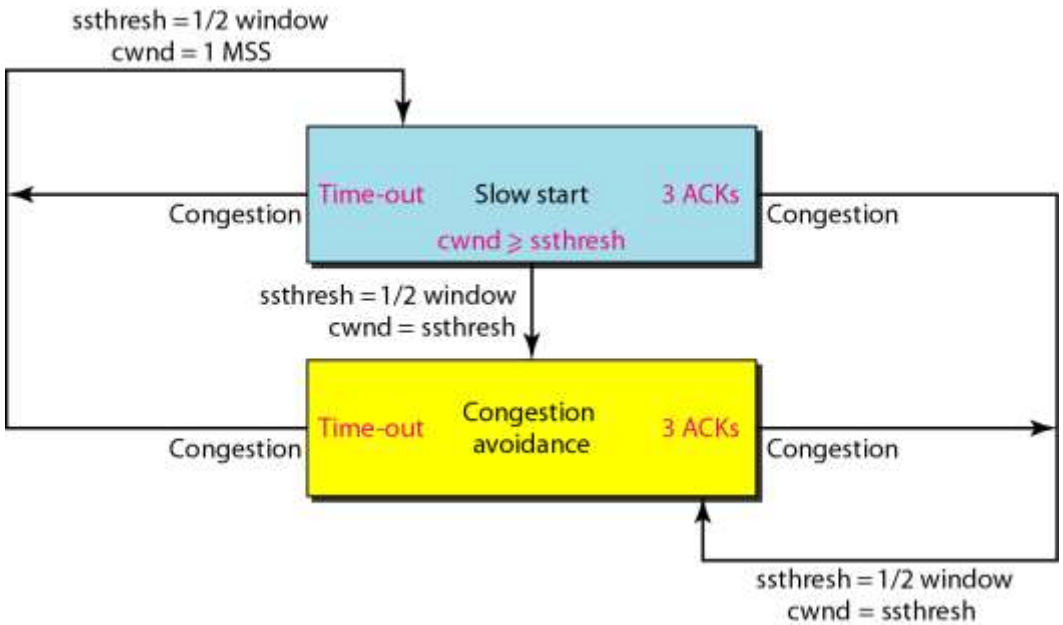

Congestion Example

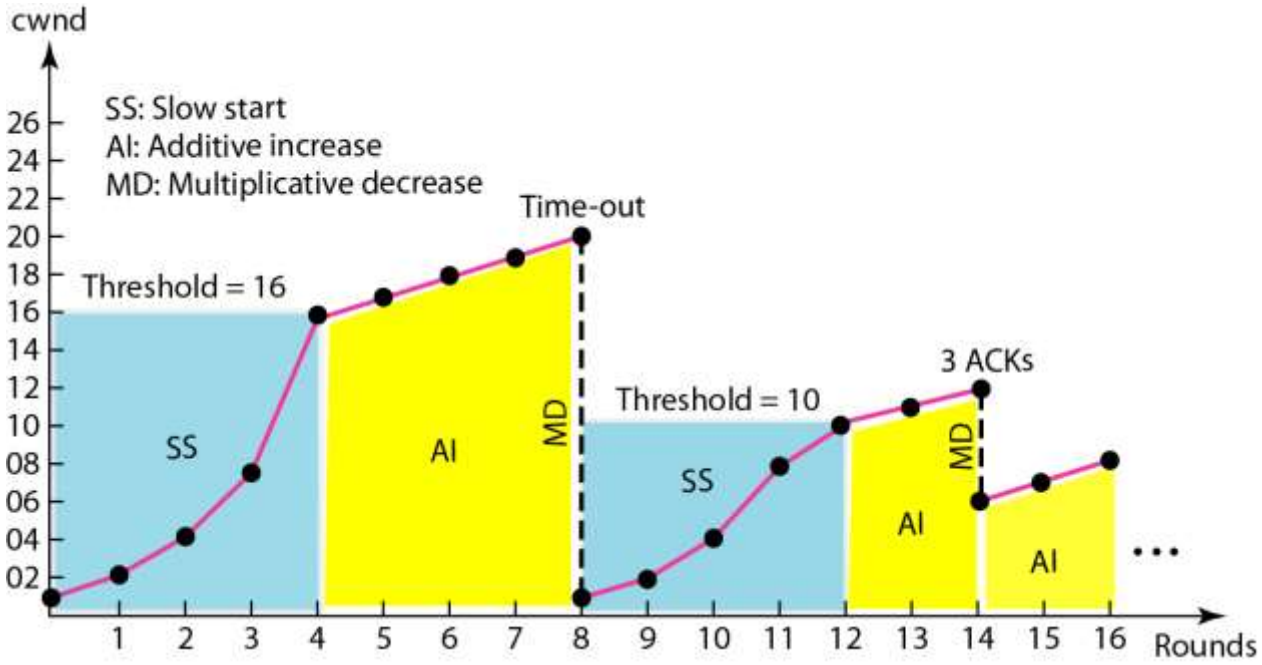

Congestion Control: Frame Relay

- Congestion avoidance: BECN and FECN
- Backward explicit congestion notification (BECN)
- Forward explicit congestion notification (FECN)

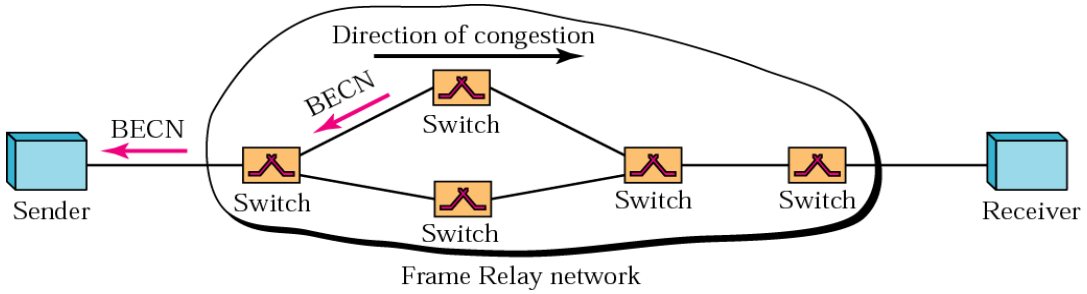

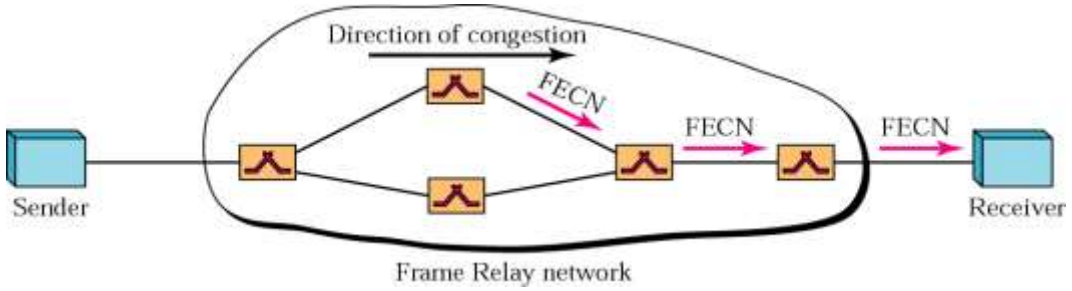

Four Cases of Congestion

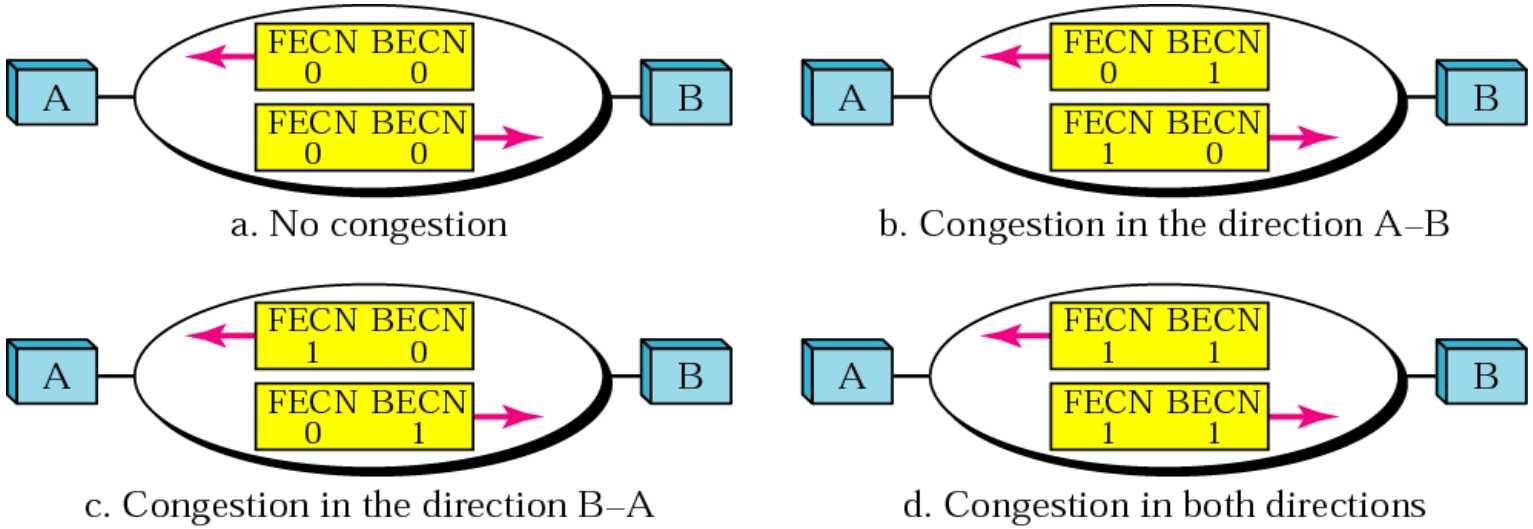

Quality of Service (QoS)

- Flow Characteristics:
  - Reliability
  - Delay
  - Jitter: the variation in delay for packets belonging to the same flow
  - Bandwidth
- Flow Classes:
  - Based on the characteristics, we can classify flows into groups, with each group having similar levels of characteristics

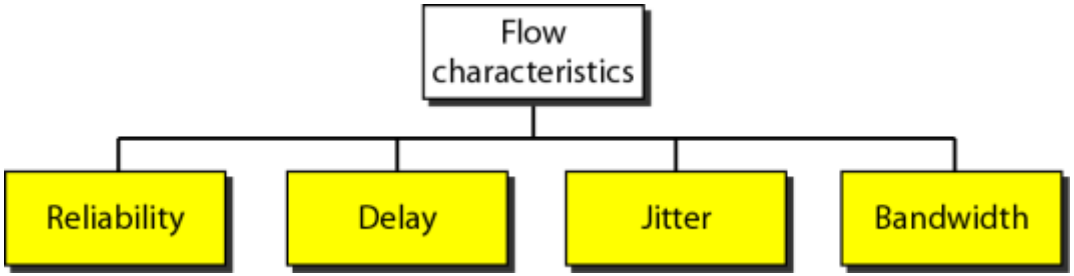

QoS Techniques

- **Scheduling**: FIFO queuing, priority queuing, and weighted fair queuing
- **Traffic shaping**: Leaky bucket, token bucket
- **Resource reservation**
- **Admission control**: accept or reject a flow based on predefined parameters called flow specification

- FIFO queuing

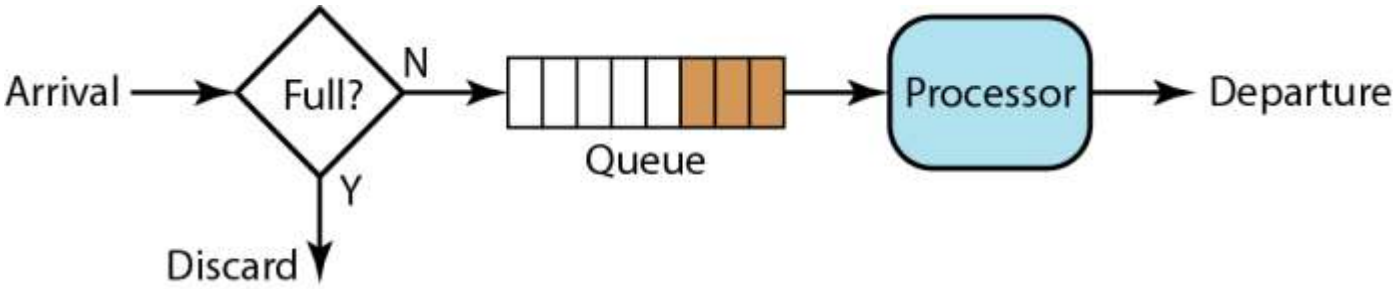

Priority Queuing

- Packets are first assigned to priority class. Each priority class has its own queue
- The packets in the highest-priority queue are processed first

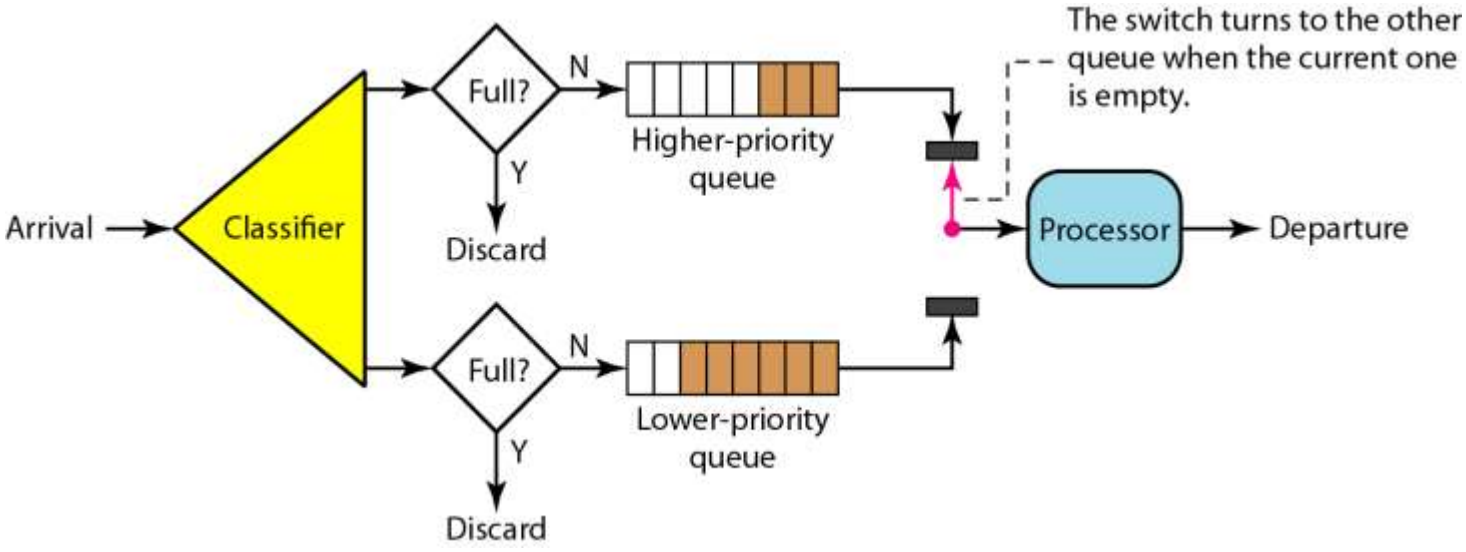

Weighted Fair Queuing

- The queues are weighted based on the priority of the queues
- The system processes packets in each queue in a round-robin fashion with the number of packets selected from each queue based on the weight

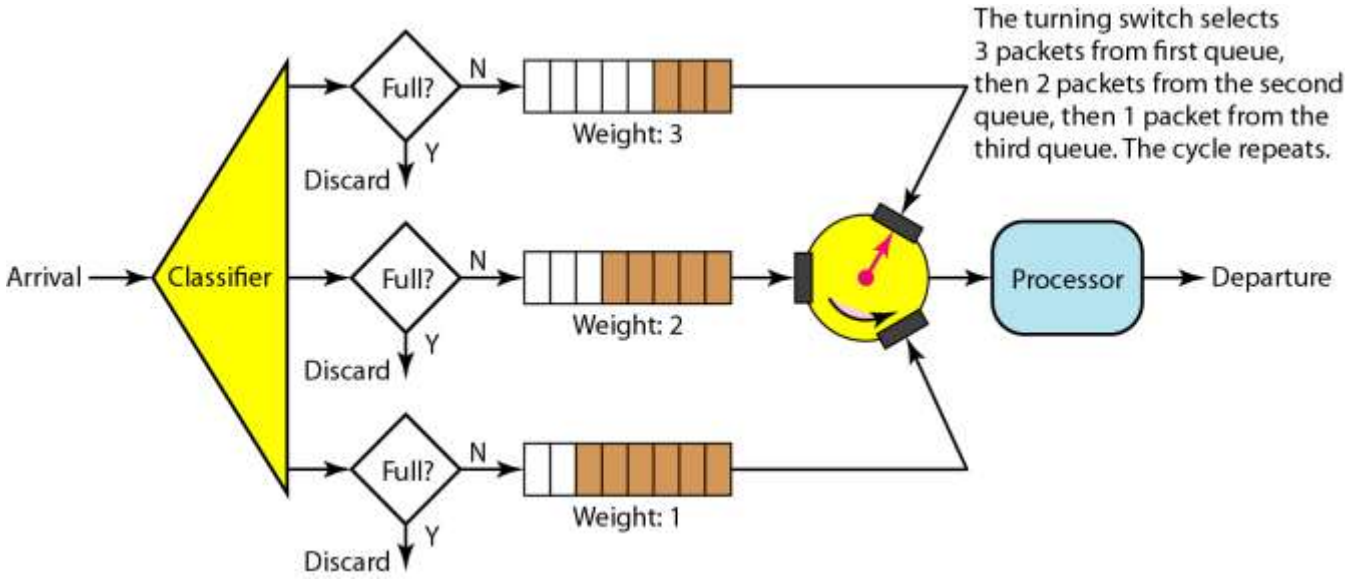

Traffic Shaping: Leaky Bucket

- Traffic shaping: to control the amount and the rate of the traffic sent to network
- Two techniques: *leaky bucket* and *token bucket*
- A leaky bucket algorithm shapes bursty traffic into fixed-rate traffic by averaging the data rate. It may drop the packets if the bucket is full.

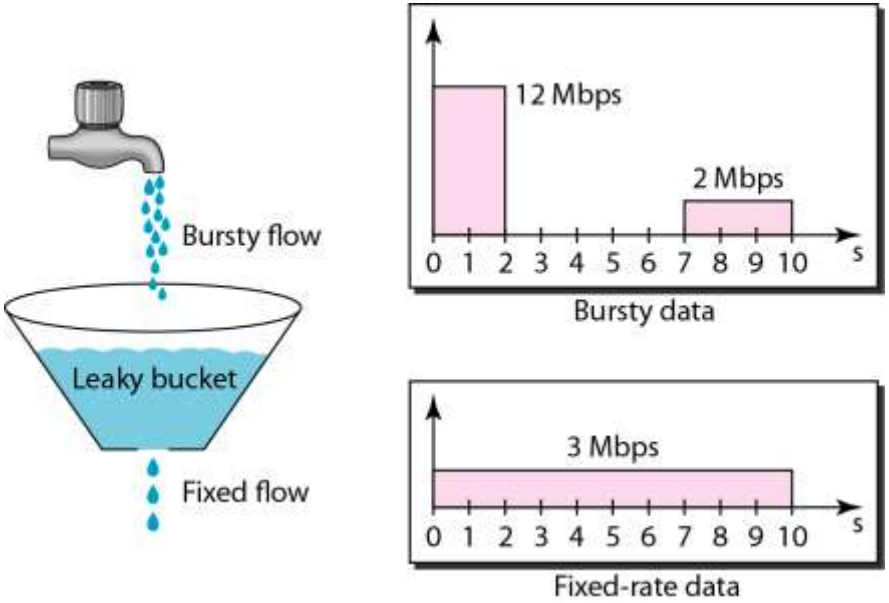

Leaky Bucket Implementation

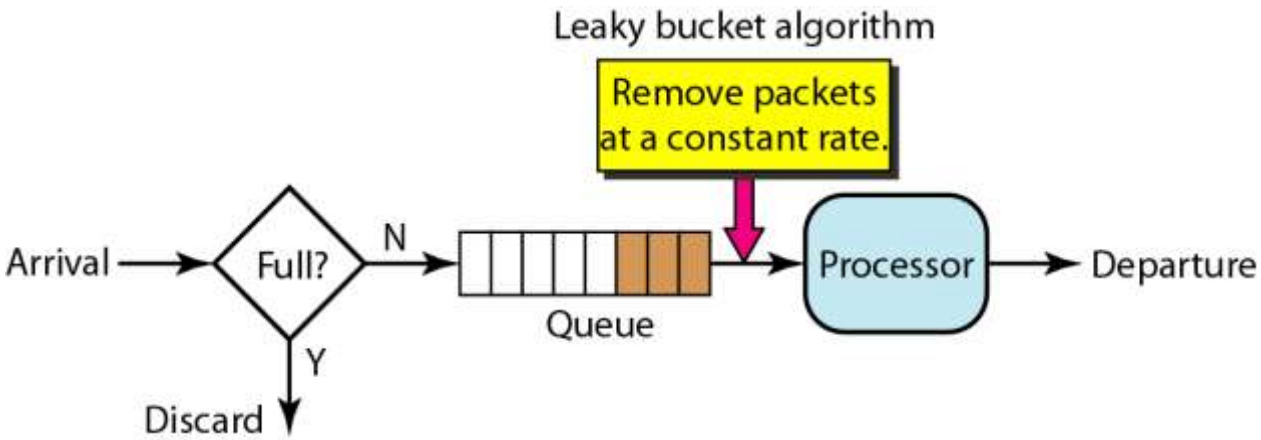

- Algorithm for variable-length packets:
  1) Initialize a counter to n at the tick of the clock
  2) If n is greater than the size of the packet, send packet and decrement the counter by the packet size. Repeat this step until n is smaller than the packet size
  3) Reset the counter and go to step 1

Token Bucket

- The token bucket allows bursty traffic at a regulated maximum rate.

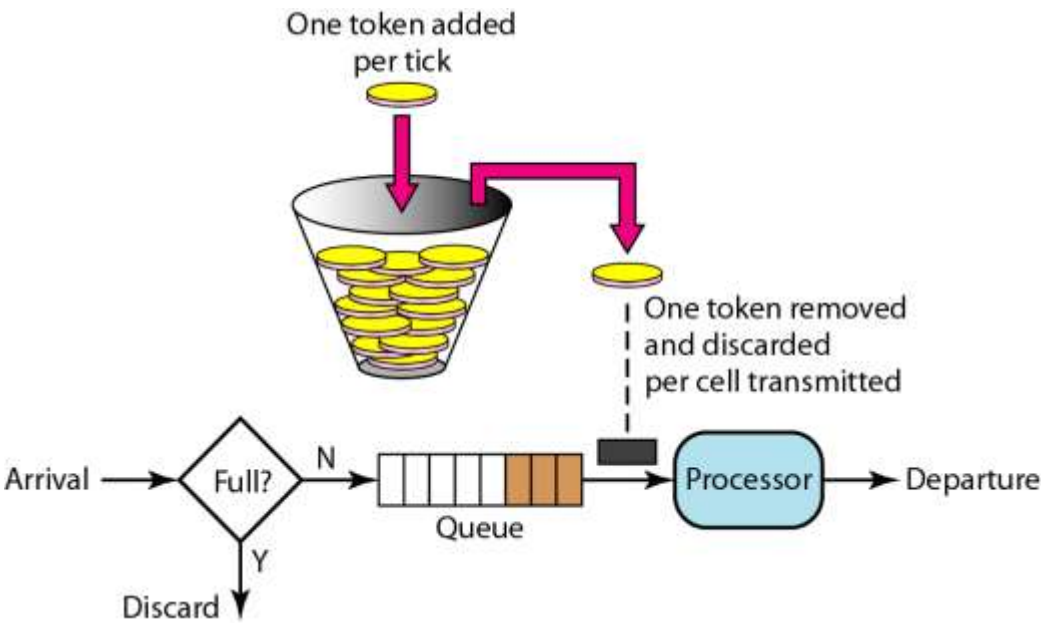

- Token bucket + leaky bucket: leaky bucket after token bucket

Integrated Services (IntServ)

- Integrated Services is a *flow-based* QoS model designed for IP
- Signaling: Resource Reservation Protocol (RSVP)
- Flow specification:
  - Rspec (resource specification) defines the resource that the flow needs to reserve
  - Tspec (traffic specification) defines the traffic characterization of the flow
- Admission: a router decides to admit or deny the flow specification
- Service classes: guaranteed service and controlled-load service
  - Guaranteed service class: guaranteed minimum end-to-end delay
  - Controlled-load service class: accept some delays, but is sensitive to an overloaded network and to the danger of losing packets

RSVP

- In IntServ, the resource reservation is for a flow, a kind of virtual circuit network out of the IP
- RSVP is a signaling protocol to help IP create a flow and consequently make a resource reservation
- RSVP is a signaling system designed for multicasting
- Receiver-based reservation
- RSVP message: **Path** and **Resv**
- **Path** message: from sender to all receivers

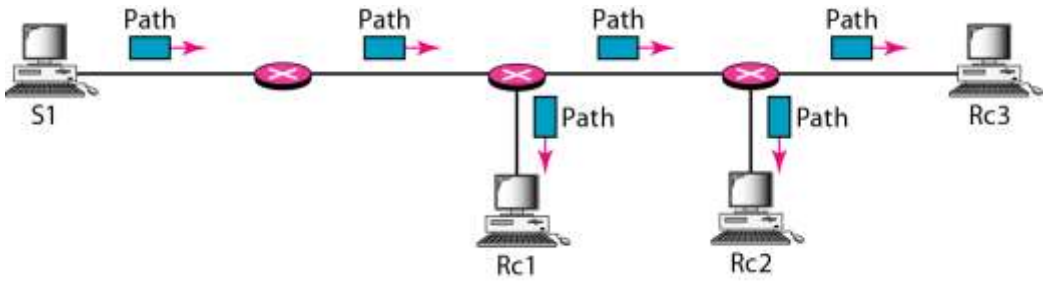

Resv Messages

- Make a resource reservation from each receiver to sender

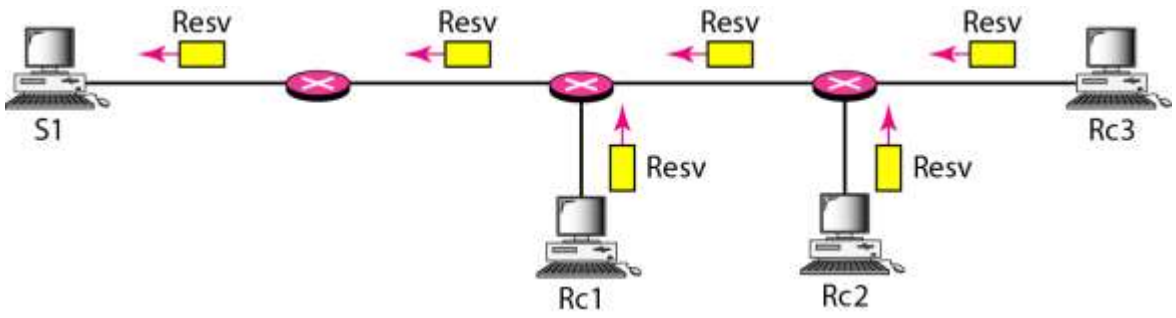

Reservation Merging

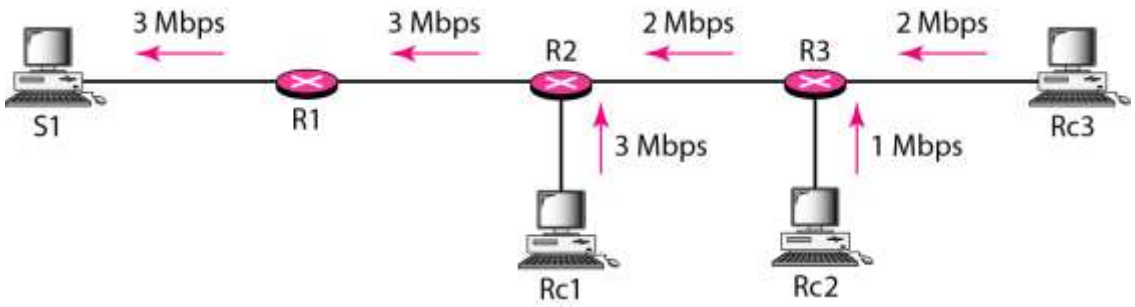

Reservation Styles

- Wild card filter style: a single reservation for all senders
- Fixed filter style: a distinct reservation for each flow
- Shared explicit style: a single reservation which can be shared by a set of flow

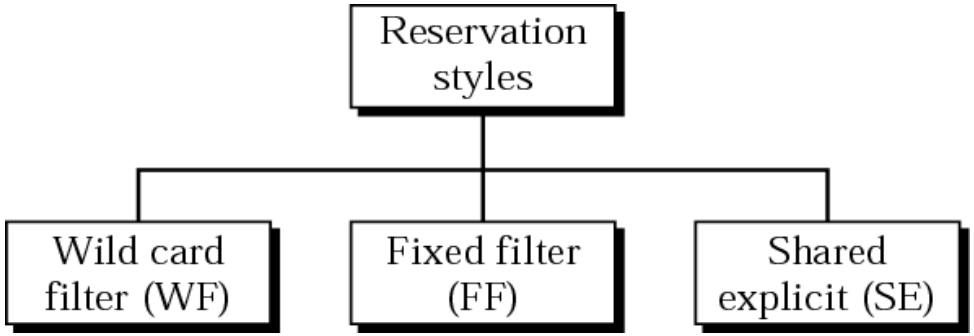

- Soft state instead of hard state (such as ATM, Frame Relay)
- Reservation information to be refreshed periodically
- IntServ problem: scalability and service-type limitation

Differentiated Service (Diffserv)

- Differentiated Services is a class-based QoS model designed for IP.
- Diffserv handles the shortcomings of IntServ
- Main differences between Diffserv and Intserv
  - Main processing is moved from the core to the edge (scalability)
  - The per-flow is changed to per-class flow service (service-type limitation)
- DS field
  - DSCP (DS Code Point) is a 6-bit field that define per-hop behavior (PHB)
  - CU (currently unused) is 2-bit

Per-hop Behavior (PHB)

- Diffserv defines three PHBs
- **DE PHB** (default PHB) is the same as best-effort delivery
- **EF PHB** (expedited forwarding PHB) provides the following services:
  - Low loss, low latency, ensured bandwidth
- **AF PHB** (assured forwarding PHB) delivers the packet with a high assurance as long as the class traffic does not exceed the traffic profile of the node

Traffic Conditioner

- **Meter** checks to see if the incoming flow matches the negotiated traffic profile
- **Marker** can re-mark a packet with best-effort delivery or down-mark a packet based on the meter information; no up-mark
- **Shaper** use the meter information to reshape the traffic if not compliant with the negotiated profile.
- **Dropper**, like a shaper with no buffer, discard packets if the flow severely violates the profile

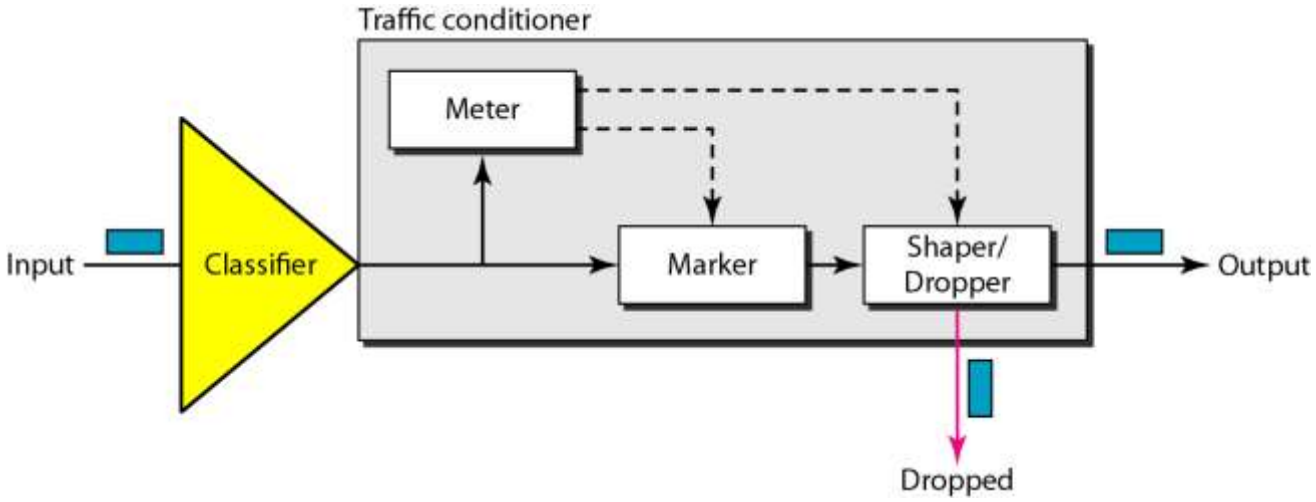

QoS in Switched Network

- QoS in Frame Relay
  - Four different attributes are used to control traffic
  - *Access rate, committed burst size* (Bc), *committed information rate* (CIR), and *excess burst size* (Be)
  - Committed Information Rate (CIR) = B_c/T bps

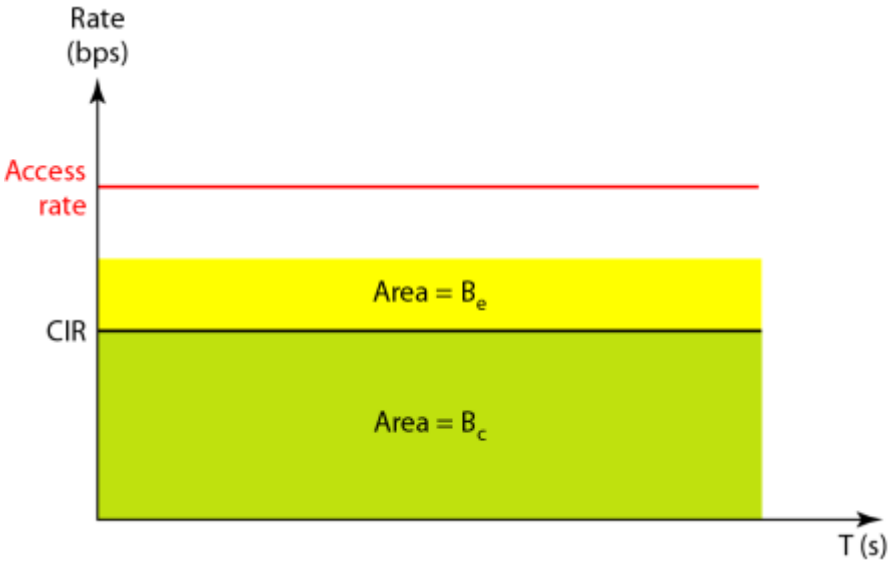

User Rate in Relation to Bc and Bc + Be

- How can a user send bursty data ?

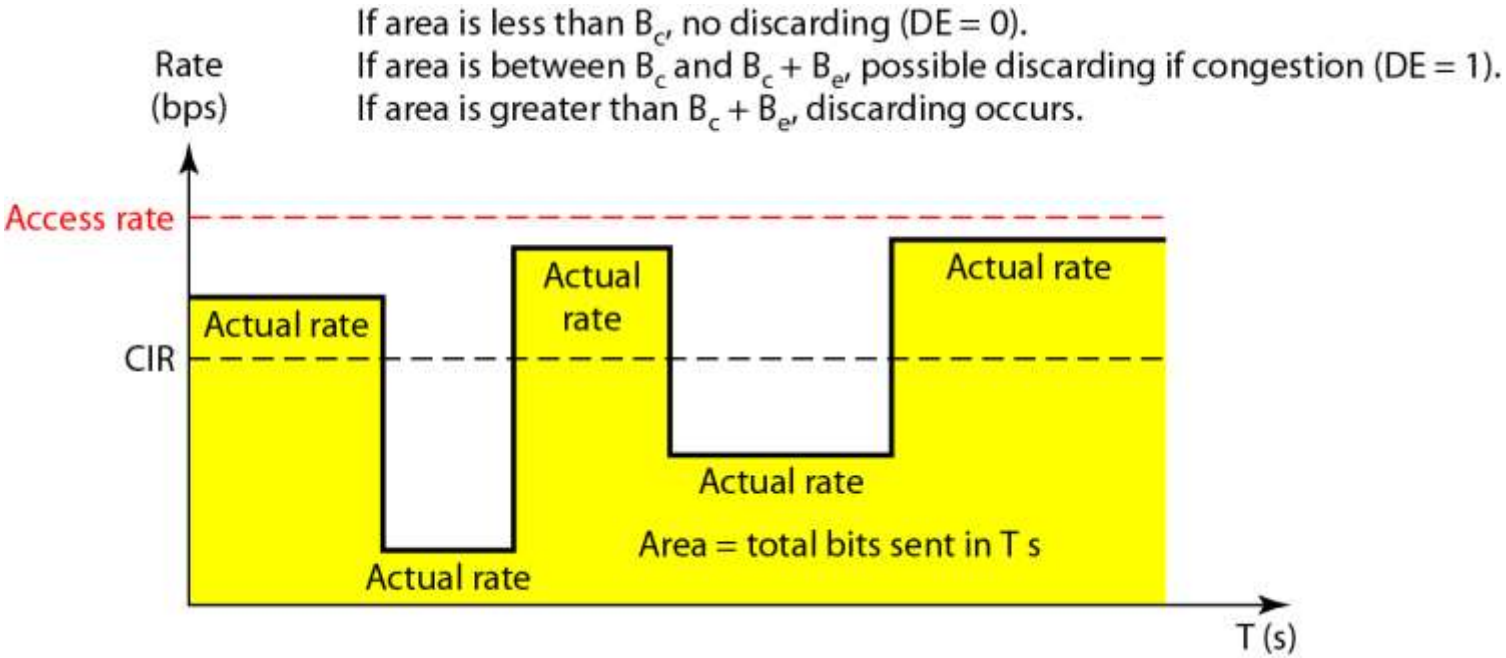

QoS in ATM

- QoS in ATM is based on the class, user related attributes, and network-related attributes
- Classes: CBR, VBR, ABR, and UBR
  - CBR (constant): real-time audio or video over dedicated T-line
  - VBR (variable): compressed audio or video, VBR-RT, VBR-NRT
  - ABR (available): bursty application
  - UBR (unspecified): best-effort delivery

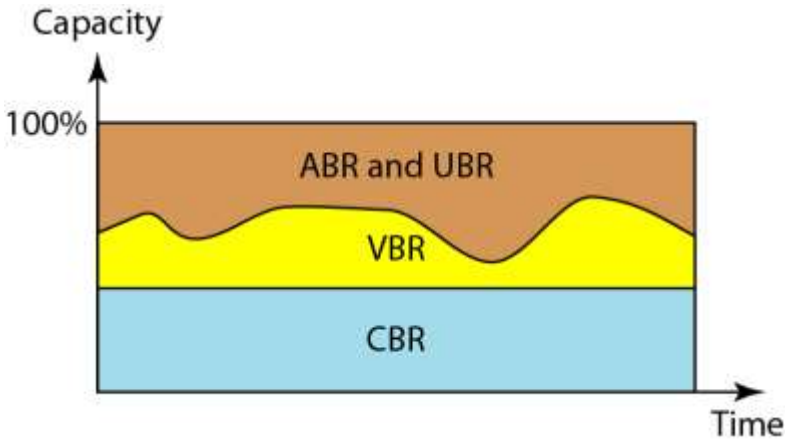

QoS in ATM

- User-related attributes:
  - SCR (sustained cell rate): average cell rate over a long time interval
  - PCR (peak cell rate)
  - MCR (minimum cell rate)
  - CVDT (cell variation delay tolerance)

- Network-related attributes:
  - CLR (cell loss ratio)
  - CTD (cell transfer delay)
  - CDV (cell delay variation)
  - CER (cell error ratio)