DTE/DCE and CSU/DSU

Data Communication and Networking

DTE/ DCE

Data Terminal Equipment (DTE):- It is an end instrument that converts user info^n into signals or reconvert the received signals.

↳ DTE communicates with DCE.

↳ DTE is the terminal (computer)

↳ DTE is the device where comm^n line ends.

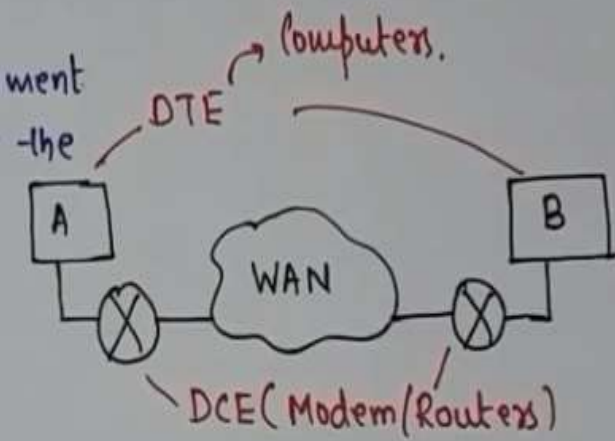

Data Communication Equipment (DCE):- Also called as Data circuit-terminating equipment and it sits b/w the DTE and Data transmission circuit.

↳ DCE is usually a modem.

↳ Perform func^n such as signal conversion, coding etc.

↳ DCE provides path for comm^n.

Internet Standards:-

- Mechanical (Wiring, Connector) (RS232) — Male DB25, Female DB25
- Electrical — NRZ, BRZ, Polar — Signal Coding.
- Functional (Protocols)

CSU (channel service unit)/DSU(data service unit)

A Channel Service Unit/Data Service Unit is a device that seats at the provider's client site used to connect the digital WAN line (Leased lines) to the client's DTE device which is usually a router.
A modem connects an analog line (phone line) to a digital device (the computer) and a CSU/DSU connects a digital line to a digital device.

The DTE would be the router and the DCE (providing clock) would be the CSU/DSU, like this:

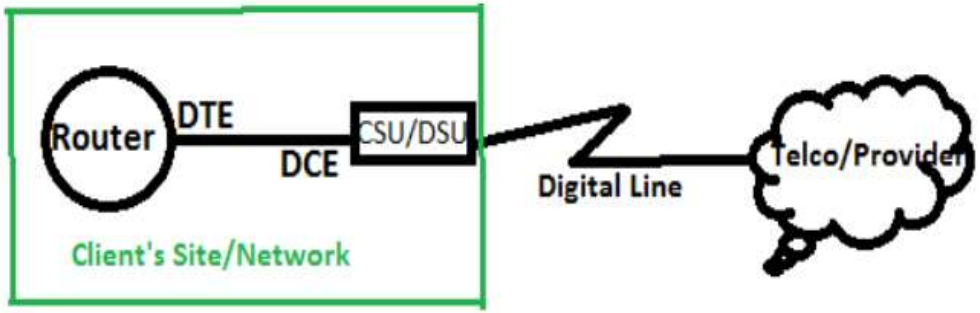

Serial communication requires clocking, and DCE is used as a generic term to label the side of the link that provides the clocking signal, and in a CSU/DSU, the side that provides this signal is the DSU. DSU is the "part" of the CSU/DSU that handles (connects) the connection to the DTE (the router). So, if you want to be specific about it, you could say that the DSU part of the CSU/DSU is the DCE.

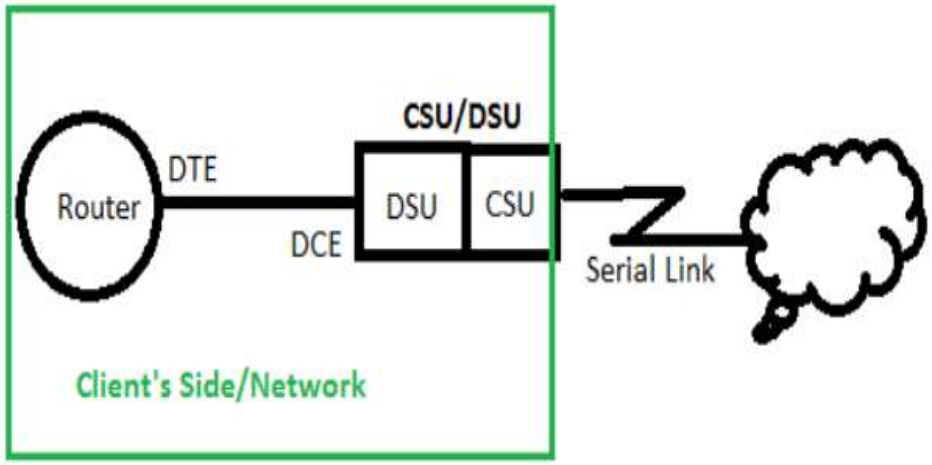

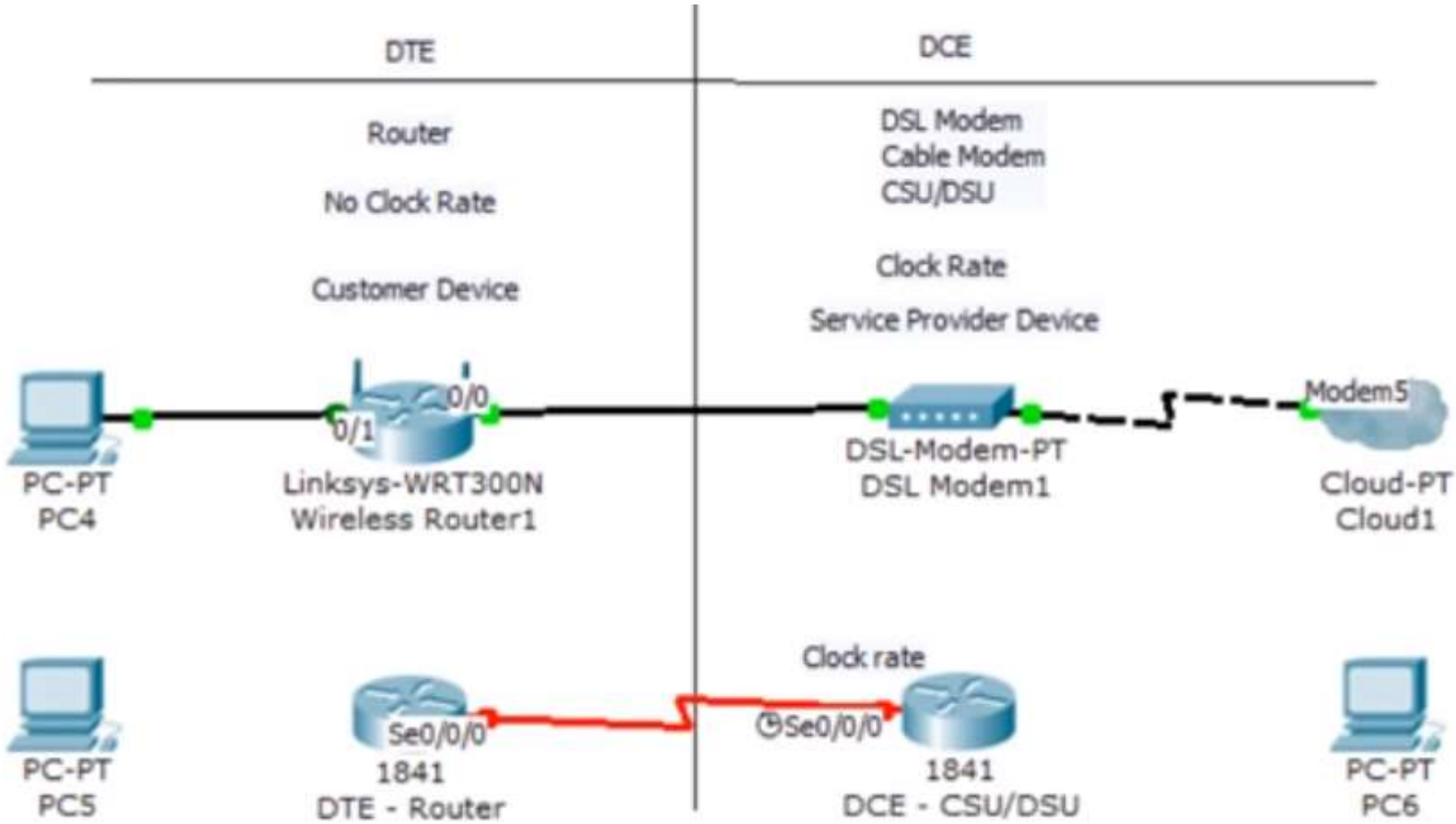
DTE
DCE
Router
No Clock Rate
Customer Device
DSL Modem
Cable Modem
CSU/DSU
Clock Rate
Service Provider Device
0/0
0/1
PC-PT
PC4
Linksys-WRT300N
Wireless Router1
DSL-Modem-PT
DSL Modem1
Modem5
Cloud-PT
Cloud1
Clock rate
Se0/0/0
Se0/0/0
PC-PT
PC5
1841
DTE - Router
1841
DCE - CSU/DSU
PC-PT
PC6

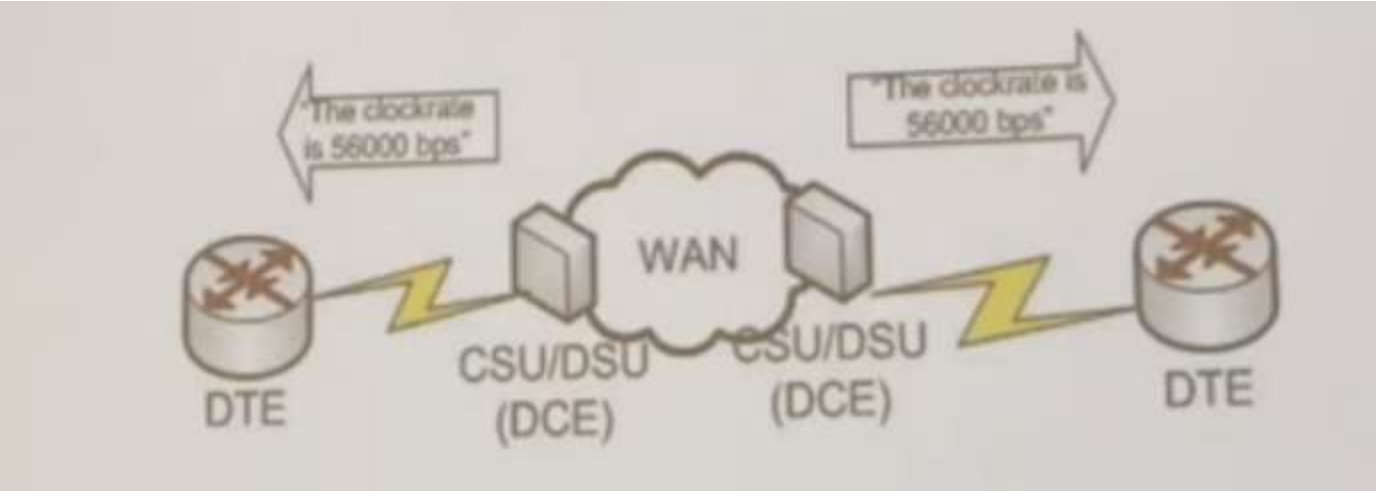
"The clockrate is 56000 bps"
"The clockrate is 56000 bps"
WAN
DTE
CSU/DSU (DCE)
CSU/DSU (DCE)
DTE

DTE + DCE

Data Terminal Equipment (DTE):-

DTE is any device that functions either as a source of or as a destination for binary digital data

⇒ It can be a terminal,

- microcomputer,
- computer,
- Printer,
- fax machine or any other device that generates or consumes digital data.

DTE do not communicate directly with one another; they generate and consume information but need to be able to communicate

Intermediate device

DCE is any device that transmits or rece
data in the form of an analog or digital signal
through a network.

DTE (DCE) ∿∿ (DCE) DT
100100 100

Eg: Modulator / demodulator → Modem
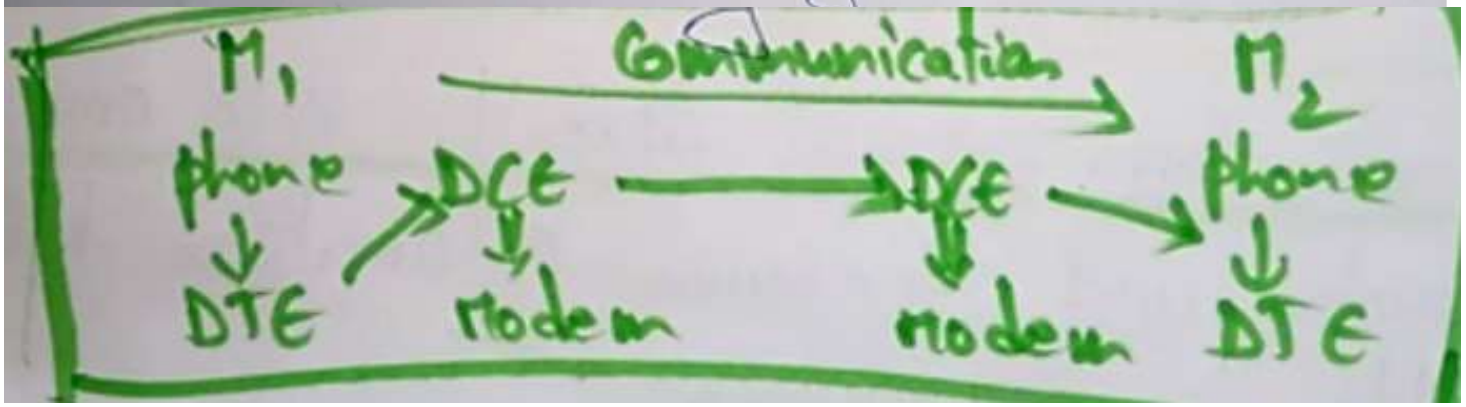
o make communication possible, both the sending and receiv
CE's must use the same modulating method.