Topic 2: Data link layer: framing and error control

***Contrast between OSI and TCP/IP reference models.

OSI Reference Model	TCP/IP Reference Model
OSI reference model is well defined reference model.	TCP/IP reference model is not well defined reference model.
OSI clearly distinguishes among service, interface and protocols.	TCP/IP does not clearly distinguish among service, interface and protocols.
Protocols in the OSI model are better hidden.	Protocols in the TCP/IP model are worse hidden as compared to OSI.
OSI model was devised before the protocols were invented.	TCP/IP model was described after the protocols come.
OSI has seven layers.	TCP/IP has four layers.
OSI supports both connection-less and connection-oriented communication in the network layer.	TCP/IP supports only connection-less communication in the network layer.
Supports only connection oriented communication in transport layer.	Supports both modes of communication in transport layer.
OSI is better for theoretical discussion and analysis.	TCP/IP is better for practical implementation.
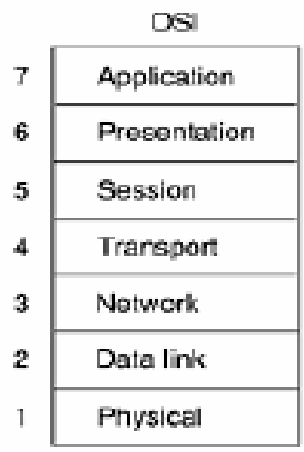	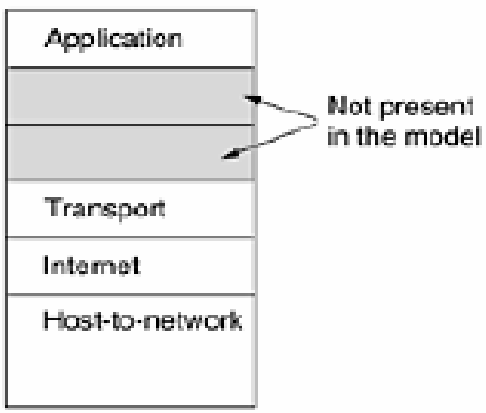

What are the limitations in case of data transfer in a computer network?

Though, in our simple concept, we know that the machine A just puts the bits on the wire, and machine B just takes them off. But there are several limitations in this case.

1. Communication circuits make errors occasionally.
2. They have only a finite data rate.
3. There is non-zero propagation delay.

What are the functions of data link layer?

The data link layer has a number of specific functions it can carry out. These functions include

1. Providing a well-defined service interface to the network layer.
2. Dealing with transmission errors.
3. Regulating the flow of data so that slow receivers are not swamped by fast senders.

What is the difference between Data Link Layer and Transport Layer?

Data Link Layer ensures whether the packet sent is received by the next nearest device while the *Transport Layer* ensures whether the data correctly reaches at the destination.

Discuss the relationship between packet and frames.

In order to accomplish the specified tasks for Data Link Layer, it gets packet from the network layer and encapsulates them into *frames* for transmission. Each frame contains a *frame header*, a *payload field* for holding the packet, and a *frame trailer*, as illustrated in the following figure.

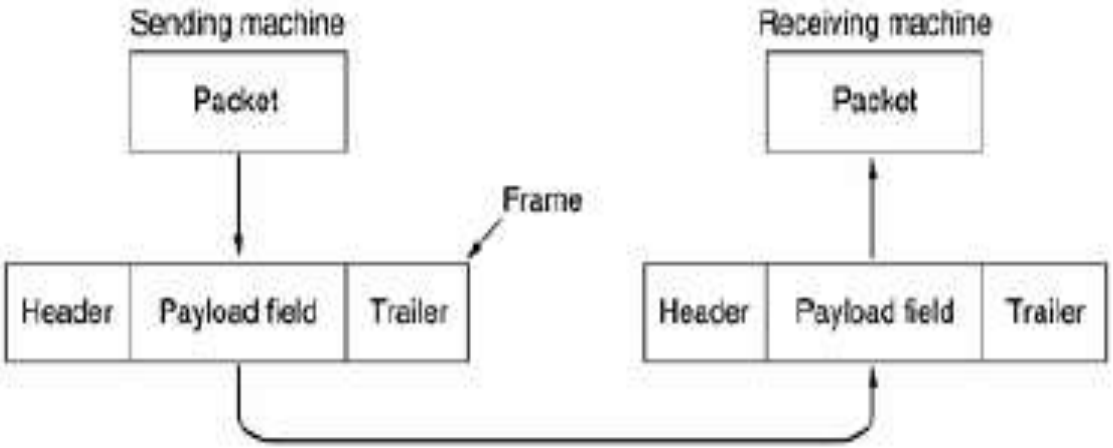

Fig.: Relationship between packets and frames.

What are the services of Data Link Layer that are provided to the Network Layer? Briefly Describe each of them.

The principal service is transferring data from the network layer on the source machine to the network layer on the destination machine. Other common services are-

1. Unacknowledged connectionless service:

Unacknowledged connectionless service consists of having the source machine send independent frames to the destination machine without having the destination machine acknowledge them. No logical connection is established beforehand or released afterward. If a frame is lost due to noise on the line, no attempt is made to detect the loss or recover from it in the data link layer. This class of service is appropriate when the error rate is very low so that recovery is left to higher layers. It is also appropriate for real-time traffic, such as voice, in which late data are worse than bad data. Most LANs use unacknowledged connectionless service in the data link layer.

2. Acknowledged connectionless service:

When this service is offered, there are still no logical connections used, but each frame sent is individually acknowledged. In this way, the sender knows whether a frame has arrived correctly. If it has not arrived within a specified time interval, it can be sent again. This service is useful over unreliable channels, such as wireless systems.

3. Acknowledged connection-oriented service:

With this service, the source and destination machines establish a connection before any data are transferred. Each frame sent over the connection is numbered, and the data link layer guarantees that each frame sent is indeed received. Furthermore, it guarantees that each frame is received exactly once and that all frames are received in the right order. With connectionless service, in contrast, it is conceivable that a lost acknowledgement causes a packet to be sent several times and thus received several times. Connection-oriented service, in contrast, provides the network layer processes with the equivalent of a reliable bit stream. However, it thus works in three phases- establish a connection, send some frames, releases the connection.

Illustrating the *Placement of Data Link Protocol*, discuss what does *Data Link Protocol* do?

Let us consider that a WAN subnet consisting of routers connected by point-to-point leased telephone lines. When a frame arrives at a router, the hardware checks it for errors, then passes the frame to the data link layer software. The data link layer software checks to see if this is the frame expected, and if so, gives the packet contained in the payload field to the routing software. The routing software then chooses the appropriate outgoing line and passes the packet back down to the data link layer software, which then transmits it. The flow over two routers is shown in the following figure.

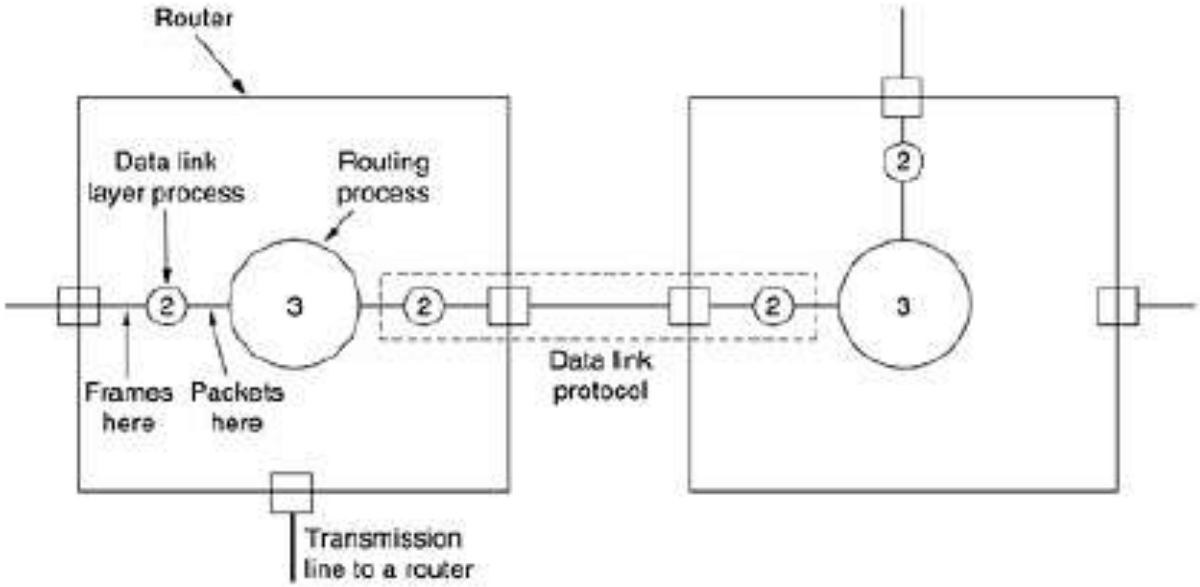

Fig.: Placement of *Data Link Protocol*

The routing code frequently wants the job done right. It does not want to be bothered with packets that got lost on the way. It is up to the data link protocol.

Differentiate between virtual communication and actual communication.

When a stream of bits is sent from one host to another, a communication path is required. In case of computer networks, it may be either virtual or actual. Physically, the path is actual and goes through the physical layer. But in case of theoretical consideration, it is to think a virtual path between two hosts from one network layer to another. The graphical depiction of virtual and actual communication is shown in the following figure.

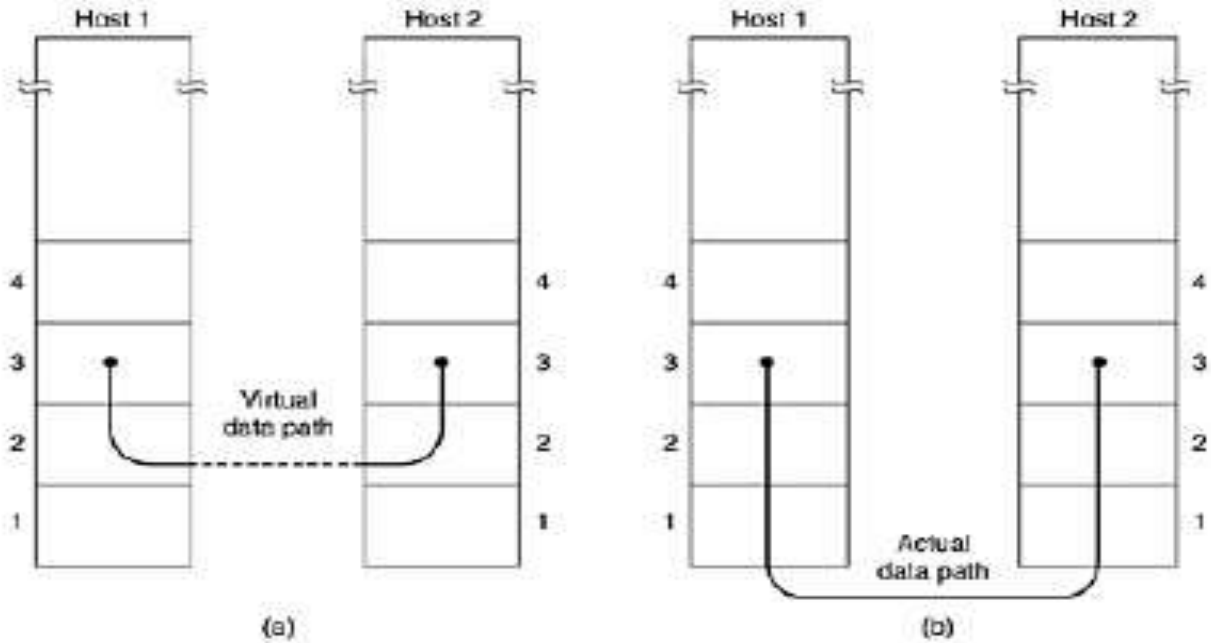

Fig.: (a) virtual communication and (b) actual communication

What do you mean by framing?

Data Link Layer receives packets from Network Layer, and delivers them to physical layer for transmission. But when these packets are received at the destination end, it is not guaranteed to be error free. To achieve considerable error control and detection mechanism, it is up to data link layer to break the packets and form frames that are better for handling errors. The process of making frames from packets is known as *framing*.

Q. Four methods of breaking bits into frame. (V.V.i)

Discuss the *Receiving Techniques* of frames.

It is more difficult to receive frames in the form they were delivered due to different types of errors in the physical path. Thus, various receiving techniques are devised as categorized below.

1. Character Count
2. Flag Bytes with Byte Stuffing
3. Starting and Ending flags, with Bit Stuffing
4. Physical Layer coding violations

Character Count Technique:

This method uses a field in the header to specify the number of characters in the frame. When the data link layer at the destination sees the character count, it knows how many characters follow and hence where the end of the frame is. This technique is shown in the following figure for four frames of sizes 5, 5, 8, and 8 characters, respectively.

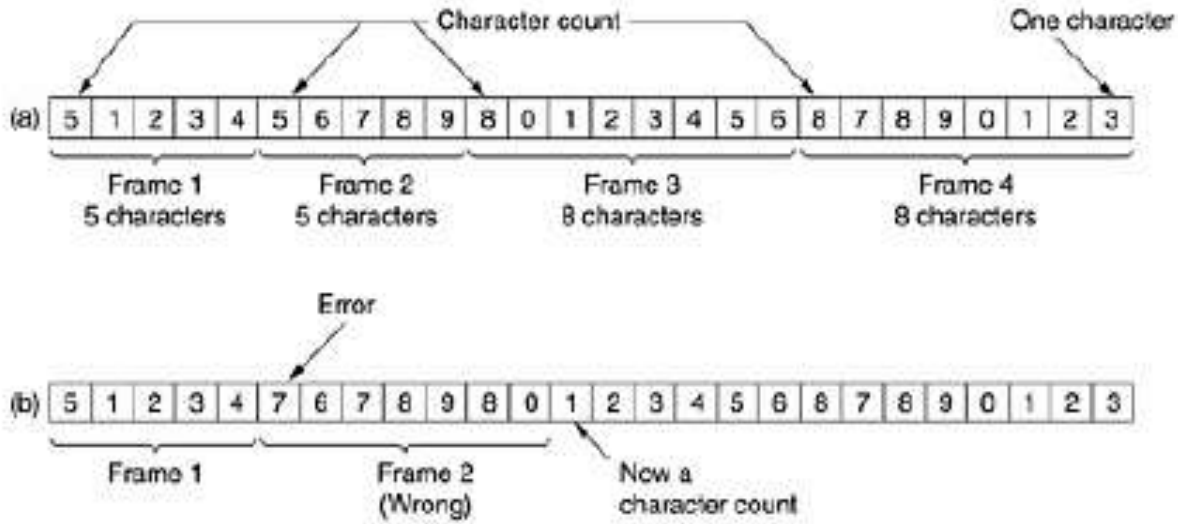

Fig.: Character Count Technique (a) without error (b) with error

The problem with this algorithm arises when in the transmission path, any character count is changed. For example, in the above figure, if the character count (5) of second frame becomes 7, the destination data link layer considers the next 7 bits as a frame and thus 1 becomes the next character count instead of 8.

Flag Bytes with Byte Stuffing:

In this method, no character count is defined at the beginning of the frame. Rather, an extra byte, called *flag byte*, is used at the beginning and at the ending of a frame so that the destination data link layer can understand the length of the frame. The technique is shown in the following figure (a).

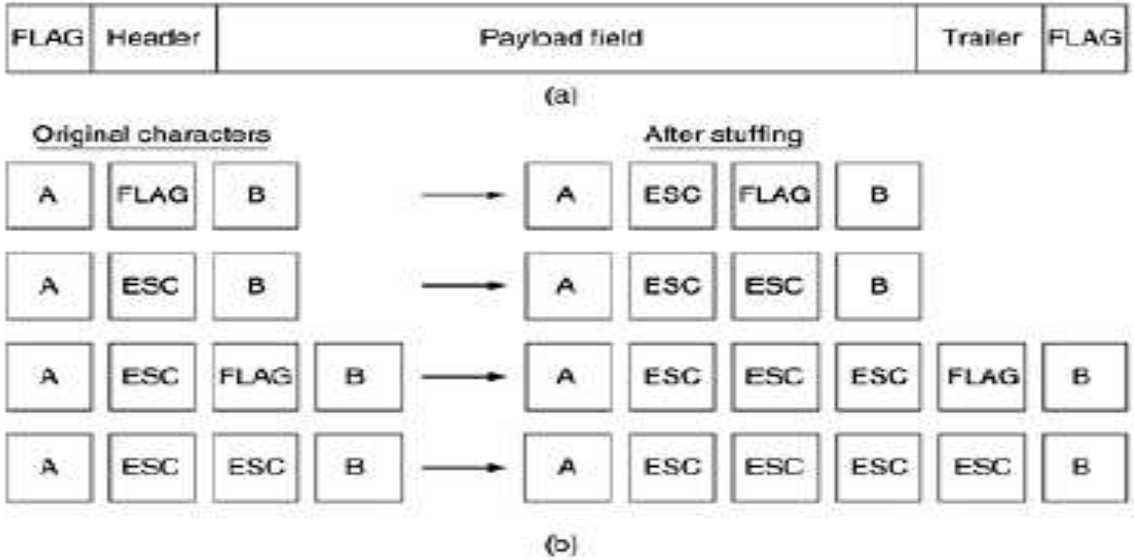

Fig.: (a) byte stuffing (b) escape byte

This algorithm may also present some error. Let us consider a situation when the bit pattern in the flag byte appears in the data filed. In this case, the destination data link layer will consider the bit pattern as ending flag and makes the end of the frame. To avoid such problem, a special byte, called ESC byte, is inserted before transmission as shown in figure (b).

A major disadvantage of this scheme is that, it strictly uses 8-bit bytes. But, not all the codes use 8-bit data. E.g. ASCII characters are 7 bits long.

 # Starting and Ending flags, with Bit Stuffing:

This techniques work like this. Each frame begins and ends with a special bit pattern, 01111110. Whenever the sender's data link layer encounters five consecutive 1s in the data, it automatically stuffs a 0 bit into the outgoing bit stream. When the receiver sees five consecutive incoming 1 bits, followed by a 0 bit, it automatically destuffs the 0 bit. If the user data contain the flag pattern, 01111110, this flag is transmitted as 011111010 but stored in the receiver's memory as 01111110.

(a) 0 1 1 0 1 1 1 1 1 1 1 1 1 1 1 1 1 1 1 1 0 0 1 0

(b) 0 1 1 0 1 1 1 1 1 0 1 1 1 1 1 0 1 1 1 1 1 0 1 0 0 1 0

Stuffed bits

(c) 0 1 1 0 1 1 1 1 1 1 1 1 1 1 1 1 1 1 1 0 0 1 0

Fig.: (a) original data (b) data appearing on transmission line (c) received data

 # Physical Layer coding violations:

This method of framing is only applicable to networks in which the encoding on the physical medium contains some redundancy. For example, some LANs encode 1 bit of data by using 2 physical bits. Normally, a 1 bit is a high-low pair and a 0 bit is a low-high pair. The scheme means that every data bit has a transition in the middle, making it easy for the receiver to locate the bit boundaries. The combinations high-high and low-low are not used for data but are used for delimiting frames in some protocols.

****NOTE:: There are more two functions/design issues of Data Link Layer. One is Error Control and the other is Flow Control. Flow controlling can be accomplished by either **feedback-based flow control or rate-based flow control.***

****NOTE:: There are more two functions/design issues of Data Link Layer. One is Error Control and the other is Flow Control. Flow controlling can be accomplished by either feedback-based flow control or rate-based flow control.*

Define Burst Error.

A burst error is one in which a block of bits is considered erroneous where the first bit and last bit must be wrong.

What are the advantages and disadvantages of burst error over isolated single-bit errors?

Advantage: Computer data are always sent in blocks of bits. Suppose that the block size is 1000 bits and the error rate is 0.001 per bit. If errors were independent, most blocks would contain an error. If the errors came in bursts of 100 however, only one or two blocks in 100 would be affected, on average.

Disadvantage: Burst errors are much harder to correct than are isolated errors.

What are the basic strategies of dealing with errors?

There are two basic strategies for dealing with errors. For both the types, redundancy means adding a few extra bits with the original data-block. Thus,

n bit codeword = **m** data bits + **r** redundant/check bits

1. Error Correction: This method tells to include enough redundant information along with each block of data sent, to enable the receiver to deduce what the transmitted data must have been. On channels that are highly reliable, such as fiber, it is cheaper to use an error detecting code and just retransmit the occasional block found to be faulty. Error Correction is alternatively known as Forward-Error-Correction. The example of an error-correcting code - consider a code with only four valid code words:

0000000000, 0000011111, 1111100000, and 1111111111

This code has a distance 5, which means that it can correct double errors.

2. Error Detection: This method tells to include only enough redundancy to allow the receiver to deduce that an error occurred, but not which error, and have it request a retransmission. On channels such as wireless links that make many errors, it is better to add enough redundancy to each block for the receiver to be able to figure out what the original block was, rather than relying on a retransmission, which itself may be in error. The example of an error-detecting code - a single parity bit is appended to the data.

- Data - 1011010
- Even parity – 10110100
- Odd parity – 10110101

[NOTE:: To **detect** d errors, we need a d+1 code. Similarly, to **correct** d errors, we need 2d+1 code.]

Uses of Hamming Code to correct single-bit error:

To generate Hamming code, at 2^x positions i.e. at 1,2,4,8,16….positions we have to place the check bits and rest of the positions are filled by **m** message bits. Let the message be 1001000. Then, filling m positions by them, we get,

		1		0	0	1		0	0	0

Later, after putting all m bits, we have to break the **m** positions by a factor of 2 as follows-

3→1,2 5→1,4 6→2,4 7→1,2,4 9→1,8 10→ 2,8

11→1,2,8

Now, let us use 2^x positions to calculate-

1→ 3,5,7,9,11 [since 1 is in 3,5,7,9 and 11]

2→ 3,6,7,11

4→ 5,6,7

8→ 9,10,11

Now, for 1, (3,5,7,9,11) bit combinations are 10100. Since it is even parity, in position 1, we should place a **0**. Similarly, for 2, (3,6,7,11) bit combinations are 1010. It is also even parity, so, in position 2, we should place a **0**. The following figure completes the procedure. For any odd parity, place a **1**.

0	0	1	1	0	0	1	0	0	0	0

Uses of Hamming Code to correct burst error:

Hamming codes can only correct single errors. However, there is a trick that can be used to permit Hamming codes to correct burst errors. A sequence of k consecutive codewords is arranged as a matrix, one codeword per row. Normally, the data would be transmitted one codeword at a time, from left to right. To correct burst errors, the data should be transmitted one column at a time, starting with the leftmost column. When all k bits have been sent, the second column is sent, and so on, as indicated in the following figure. When the frame arrives at the receiver, the matrix is reconstructed, one column at a time. **If a burst error of length k occurs, at most 1 bit in each of the k codewords will have been affected**, but the Hamming code can correct one error per codeword, so the entire block can be restored.

Char.	ASCII	Check bits
H	1001000	00110010000
a	1100001	10111001001
m	1101101	11101010101
m	1101101	11101010101
i	1101001	01101011001
n	1101110	01101010110
g	1100111	01111001111
	0100000	10011000000
c	1100011	11111000011
o	1101111	10101011111
d	1100100	11111001100
e	1100101	00111000101

Order of bit transmission

Cyclic Redundancy Code (CRC) to detect errors:

CRC code is also known as polynomial code. In this case, the code is considered as a polynomial. For example, 110001 has 6 bits and thus represents a six-term polynomial with coefficients 1, 1, 0, 0, 0, and 1: x5 + x4 + x0. In this case, the sender and the receiver must agree upon a generator polynomial, G(x), in advance. Both the high- and low-order bits of the generator must be 1. The algorithm for computing checksum is given below.

1. Let r be the degree of G(x). Append r zero bits to the low-order end of the frame so it now contains m + r bits and corresponds to the polynomial x M r (x).

2. Divide the bit string corresponding to G(x) into the bit string corresponding to x M r (x), using modulo 2 division.

3. Subtract the remainder (which is always r or fewer bits) from the bit string corresponding to x M r (x) using modulo 2 subtraction. The result is the checksummed frame to be transmitted. Call it polynomial T(x).

What will be the transmitted frame if the given frame is 1101011011 using the generator G(x) = x4 + x + 1 when CRC code is used?

Frame : 1 1 0 1 0 1 1 0 1 1

Generator: 1 0 0 1 1

Message after 4 zero bits are appended: 1 1 0 1 0 1 1 0 1 1 0 0 0 0

```
                 1 1 0 0 0 0 1 0 1 0
10011 | 1 1 0 1 0 1 1 0 1 1 0 0 0 0
        1 0 0 1 1
          1 0 0 1 1
          1 0 0 1 1
            0 0 0 0 1
            0 0 0 0 0
              0 0 0 1 0
              0 0 0 0 0
                0 0 1 0 1
                0 0 0 0 0
                  0 1 0 1 1
                  0 0 0 0 0
                    1 0 1 1 0
                    1 0 0 1 1
                      0 1 0 1 0
                      0 0 0 0 0
                        1 0 1 0 0
                        1 0 0 1 1
                          0 1 1 1 0
                          0 0 0 0 0
                            1 1 1 0   <- Remainder
```

Briefly explain the HDLC and PPP protocol.

High Level Data Link Control (HDLC) protocol:

It is a bit oriented protocol, views the frame as a collection of bits. This protocol use bit stuffing for data transparency. It uses the following frame format. [all bit oriented protocols use this frame format]

Bits	8	8	8	≥0	16	8
	01111110	Address	Control	Data	Checksum	01111110

The Address field is primarily of importance on lines with multiple terminals, where it is used to identify one of the terminals. For point-to-point lines, it is sometimes used to distinguish commands from responses. The Control field is used for sequence numbers, acknowledgements, and other purposes. The Data field may contain any information. It may be arbitrarily long. The Checksum field is a cyclic redundancy code. [01111110 byte is a flag byte]

Advantages:

- HDLC provides both connection-oriented and connectionless service.
- HDLC can be used for point to multipoint connections.
- HDLC is the default encapsulation for serial interfaces on CISCO routers.
- HDLC frames can be transmitted over synchronous or asynchronous links.

Point-to-Point (PPP) protocol:

This protocol is character oriented rater than bit oriented as HDLC. It uses the following frame format.

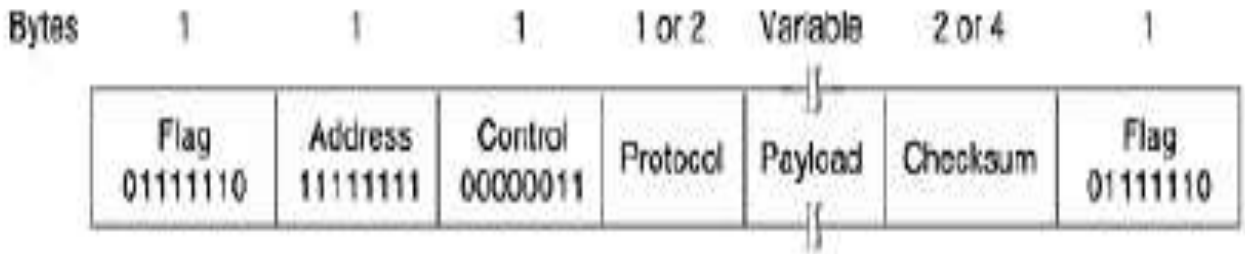

Address field is always set to the binary value 11111111 to indicate that all stations are to accept the frame. Using this value avoids the issue of having to assign data link addresses. The default value of control field is 00000011. This value indicates an unnumbered frame. The job of payload field is to tell what kind of packet is in the Payload field. The Checksum field normally contains 2 bytes.

Simplified version of phase diagram for bringing a line up and down:

Such a diagram can describe a line is made up and down. The protocol starts with the line in the DEAD state, which means that no physical layer carrier is present and no physical layer connection exists. After physical connection is established, the line moves to ESTABLISH. At that point LCP option negotiation begins, which, if successful, leads to AUTHENTICATE. Now the two parties can check on each other's identities if desired. When the NETWORK phase is entered, the appropriate NCP protocol is invoked to configure the network layer. If the configuration is successful, OPEN is reached and data transport can take place. When data transport is finished, the line moves into the TERMINATE phase, and from there, back to DEAD when the carrier is dropped.

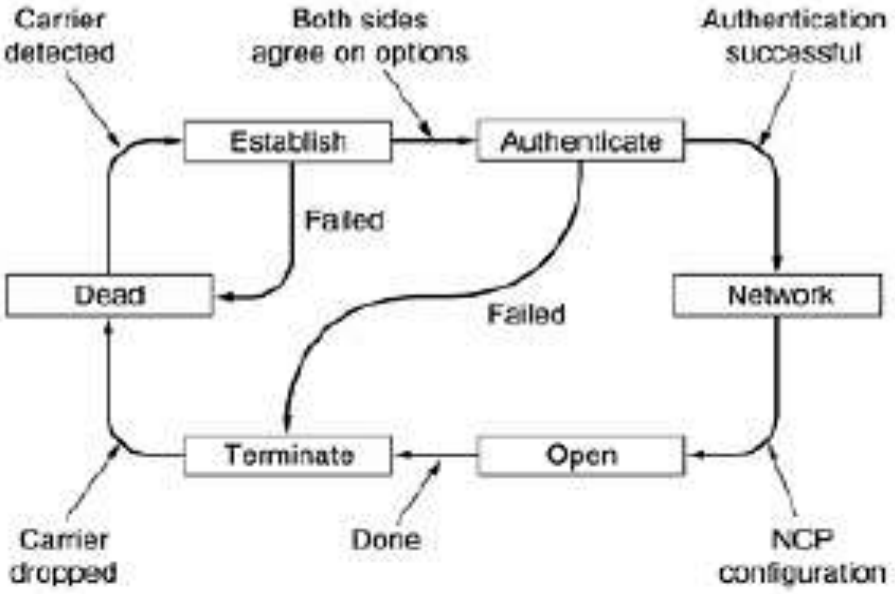

What do you mean by Collision Domain? How does a switch reduces the size of the collision domain while a hub increases it?

 # Collision Domain:

A collision domain is a physical network segment where data packets can "collide" with one another for being sent on a shared medium, in particular in the Ethernet networking protocol.

A Hub usually sends the packet to all the hosts connected to it when it receives a packet. The hosts that do not require that particular packet discard the packet while the hosts that need that packet accept it. Thus, connecting N hosts by a hub will make a collision domain of size N. In contrast, a switch can read the MAC address of a packet and can thus understand to which host a packet needs to be sent. The switch then sends the packet to that particular hosts and thus reduces the collision domain.

What is CSMA? How collision handled with the CSMA/CD?

 # CSMA:

CSMA stands for Carrier Sense Multiple Access. Protocols in which stations listen for a carrier and act accordingly are called carrier sense protocols. CSMA is of two types- *1-persistent* and *non-persistent*.

1-persistent CSMA:

When a station has data to send, it first listens to the channel to see if anyone else is transmitting at that moment. If the channel is busy, the station waits until it becomes idle. When the station detects an idle channel, it transmits a frame. If a collision occurs, the station waits a random amount of time and starts all over again. The protocol is called 1-persistent because the station transmits with a probability of 1 when it finds the channel idle.

Non-persistent CSMA:

In this protocol, a conscious attempt is made to be less greedy than in the previous one. Before sending, a station senses the channel. If no one else is sending, the station begins doing so itself. However, if the channel is already in use, the station does not **continually** sense it for the purpose of seizing it immediately upon detecting the end of the previous transmission. Instead, it waits a random period of time and then repeats the algorithm. Consequently, this algorithm leads to better channel utilization but longer delays than 1-persistent CSMA.

Handling Collision with CSMA/CD:

CSMA/CD refers to CSMA with Collision Detection. In this approach, No station begins to transmit when it senses the channel busy. Stations abort their transmissions as soon as they detect a collision (i.e. abruptly). Quickly terminating damaged frames saves time and bandwidth.

When to Start Transmit – CSMA

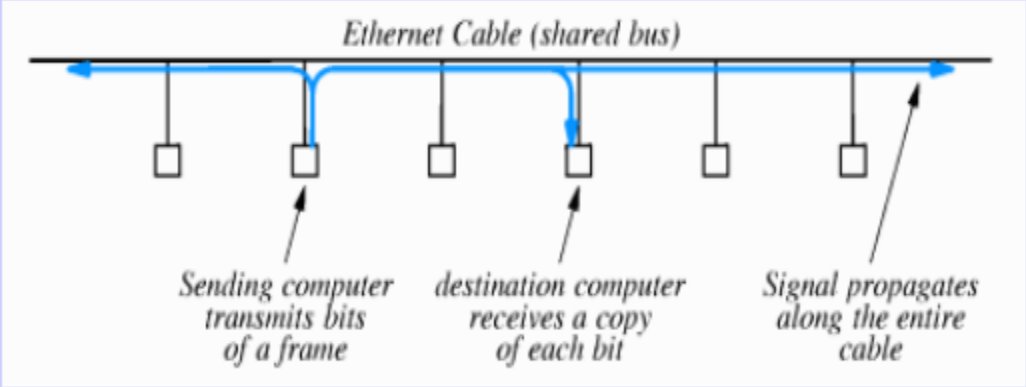

Animation

All computers connect to a bus but only one can transmit at a time.→Who can?
No central controller/manager when computers transmit on the bus!!
Ethernet employs CSMA to coordinate transmissions among multiple computers
CSMA (Carrier Sense with Multiple Access)
- **MA** (Multiple Access): multiple computers are attached, any can access bus
- **CS** (Carrier Sense): a computer listens to carrier before sending data
  → waits if medium/bus is busy (another computer is transmitting)
  → transmits if medium/bus is idle (no one transmits)

When to Start Transmit – CSMA/CD

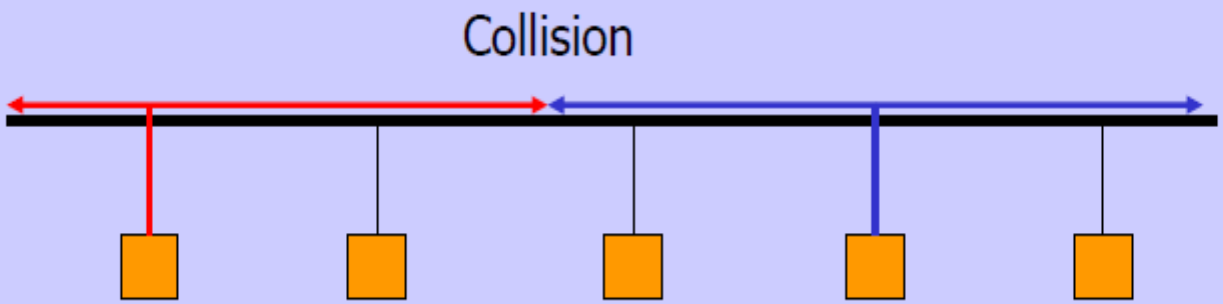

Animation

Animation

Even with CSMA, two computers may transmit simultaneously
- Both find it idle and begin transmitting in almost a same time
- Two signals exist in medium, interfere each other, call collision

CD (Carrier Detection)
- Monitor outgoing signal
- Stop transmissions after collision is detected
- Each waits random time in [0, S]
- Listen to the bus and transmit again if it is idle
- Wait random time in [0, 2S] if collisions is detected again
- Double waiting time range [0, 2^kS] when k+1 collisions detected
  → Called exponential backoff, very effective in practical

CSMA/CD Flowchart

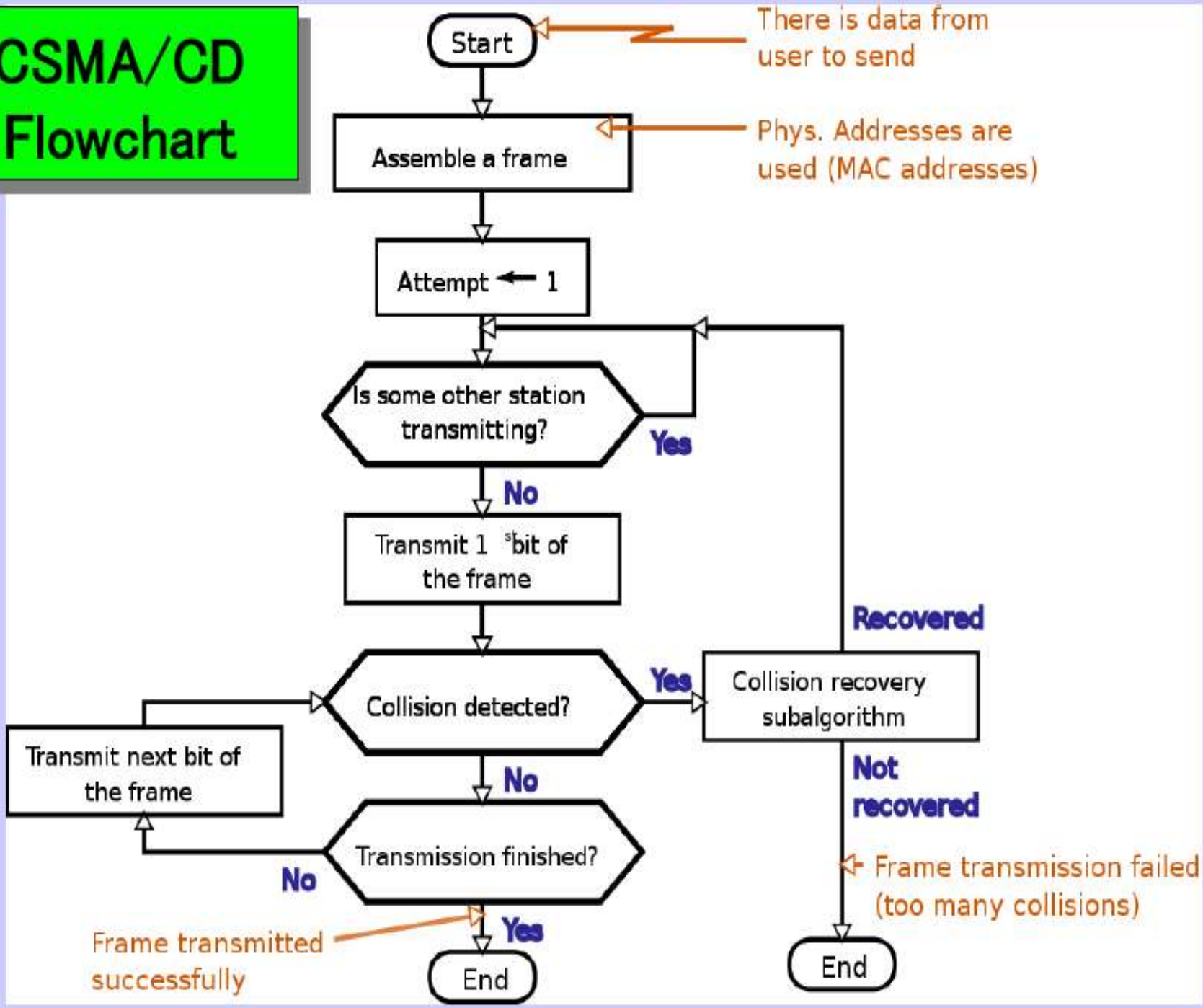
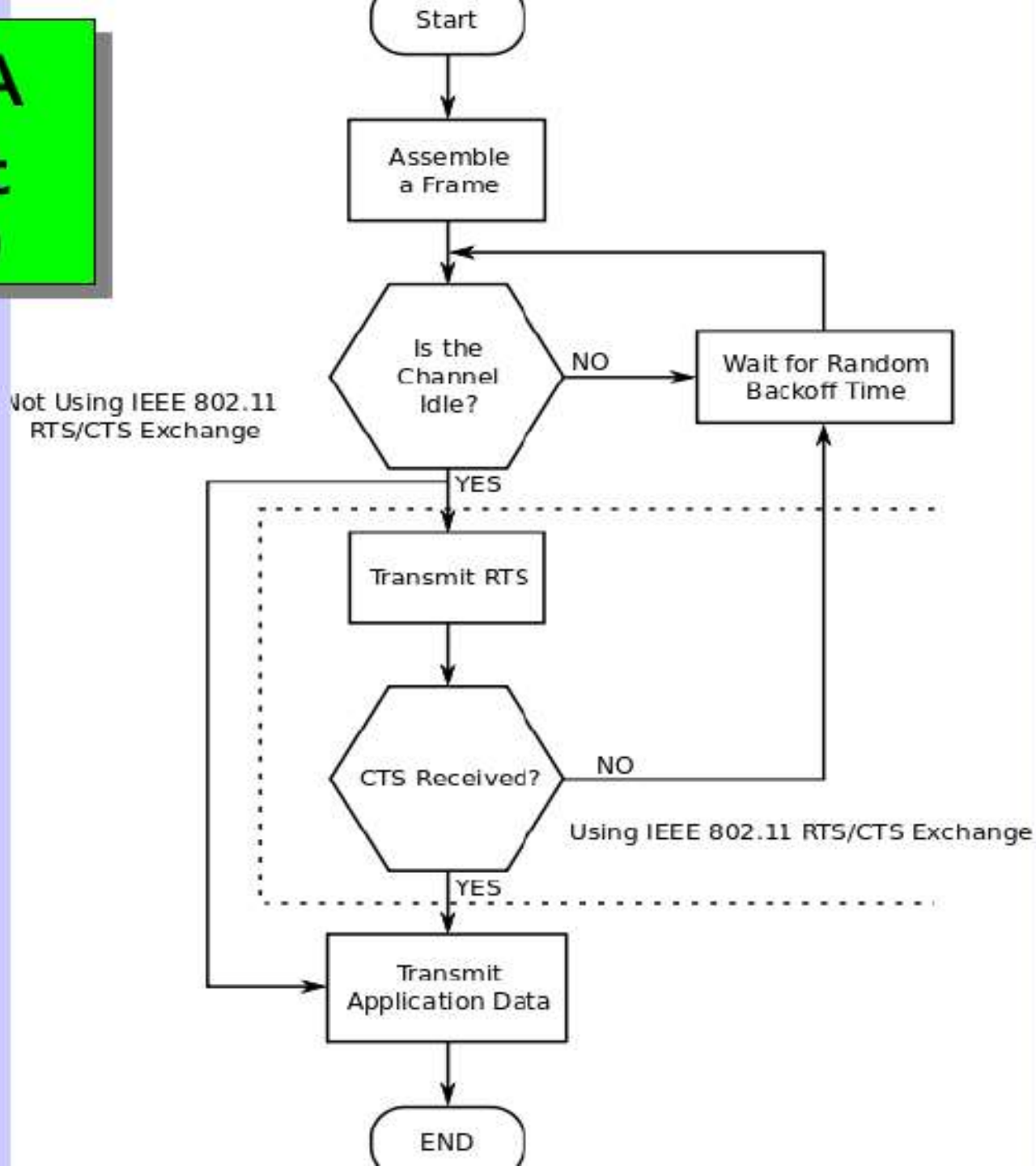
CSMA/CA Flowchart (IEEE802.11)