Flow Control

- In Data Link Layer, we deal with issues related to point to point links
  - Flow control is one of these issues

- Flow control is needed since the sending entity should not overwhelm the receiving entity
  - Recipient needs some time to process incoming packets
  - If sender sends faster than recipient processes, then buffer overflow occurs
    - flow control prevents buffer overflow

Performance Metrics and Delays (Section 5.3)

- Transmission time (delay)
  - Time taken to emit all bits into medium
- Propagation time (delay)
  - Time for a bit to traverse the link
- Processing time (delay)
  - time spent at the recipient or intermediate node for processing
- Queuing time (delay)
  - waiting time at the queue to be sent out

Model of Frame Transmission

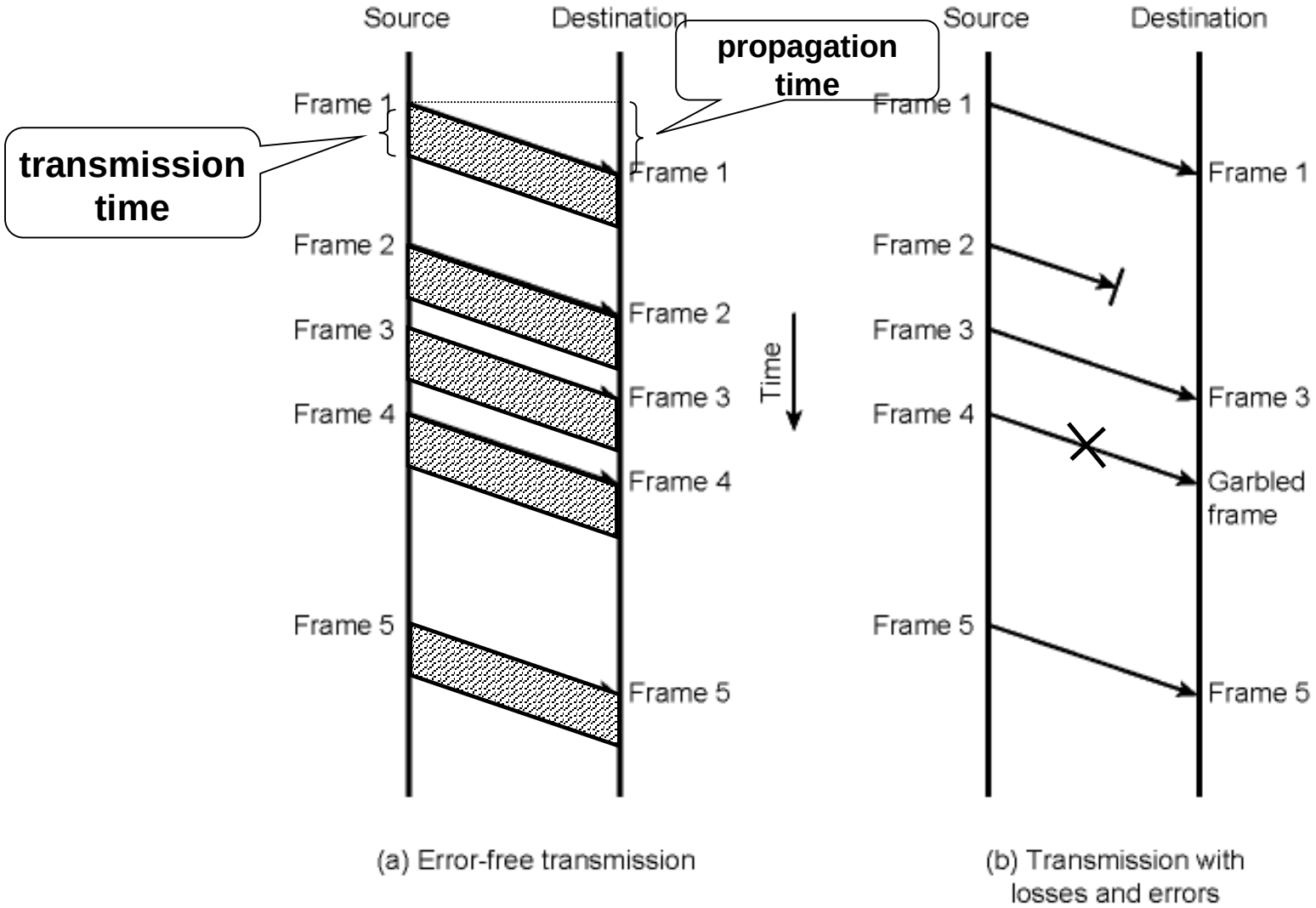

(a) Error-free transmission

(b) Transmission with losses and errors

Stop and Wait Flow Control

- Source transmits frame
- Destination receives frame and replies with acknowledgement (ACK)
- Source waits for ACK before sending next frame
- Destination can stop flow by not sending ACK
- Works well for large frames
- Inefficient for smaller frames

Stop and Wait Flow Control

- However, generally large block of data split into small frames
  - Called "Fragmentation"
    - Limited buffer size at receiver
    - Errors detected sooner (when whole frame received)
      - On error, retransmission of smaller frames is needed
    - Prevents one station occupying medium for long periods
- Channel Utilization is higher when
  - the transmission time is longer than the propagation time
  - frame length is larger than the bit length of the link
  - actually last two expressions mean the same
  - see the derivations on board

Figure 5.6
Stop and Wait Link Utilization

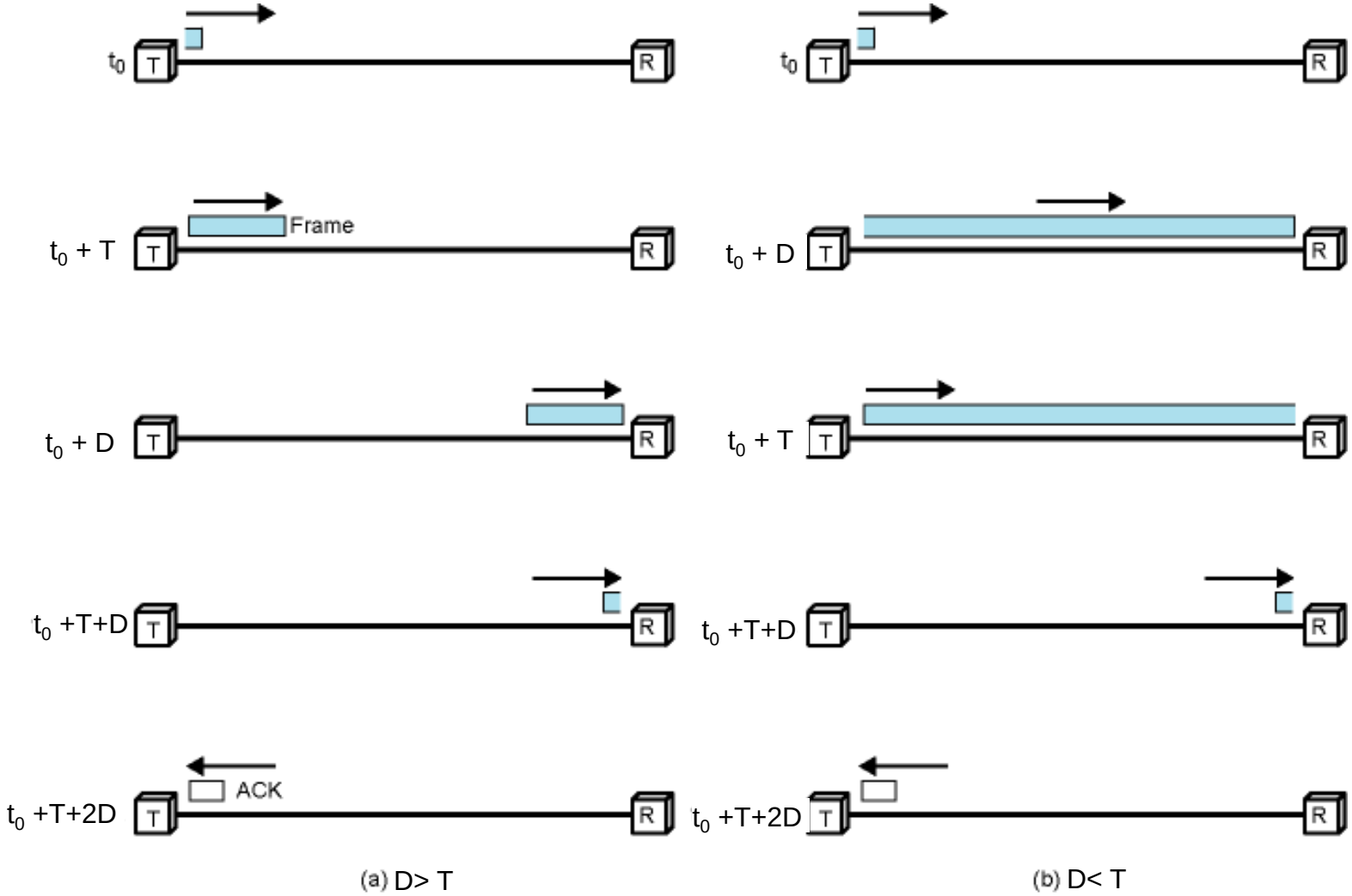

propagation time = D, transmission time = T

Sliding Window Flow Control

- The problem of "Stop and Wait" is not be able to send multiple packets
- Sliding Window Protocol allows multiple frames to be in transit
- Receiver has buffer of *W* (called window size) frames
- Transmitter can send up to *W* frames without ACK
- Each frame is numbered
  - Sequence number bounded by size of the sequence number field (*k* bits)
  - thus frames are numbered modulo 2^k (0 … 2^k-1)
- ACK includes number of next frame expected

Sliding Window Flow Control (W = 7)

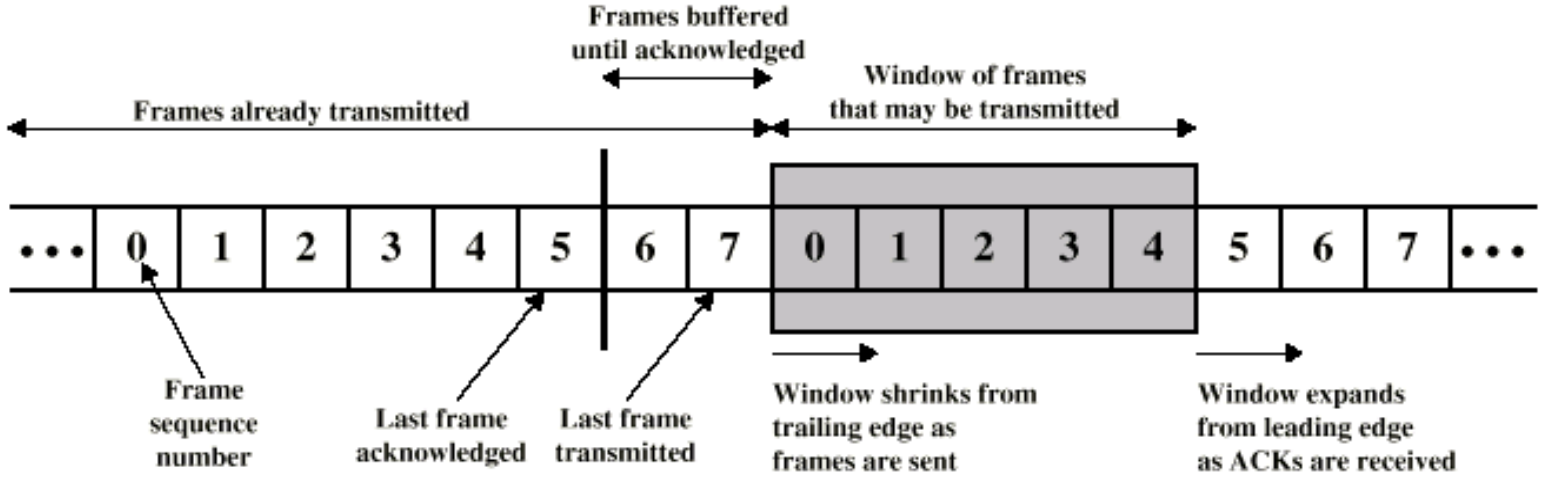

(a) Sender's perspective

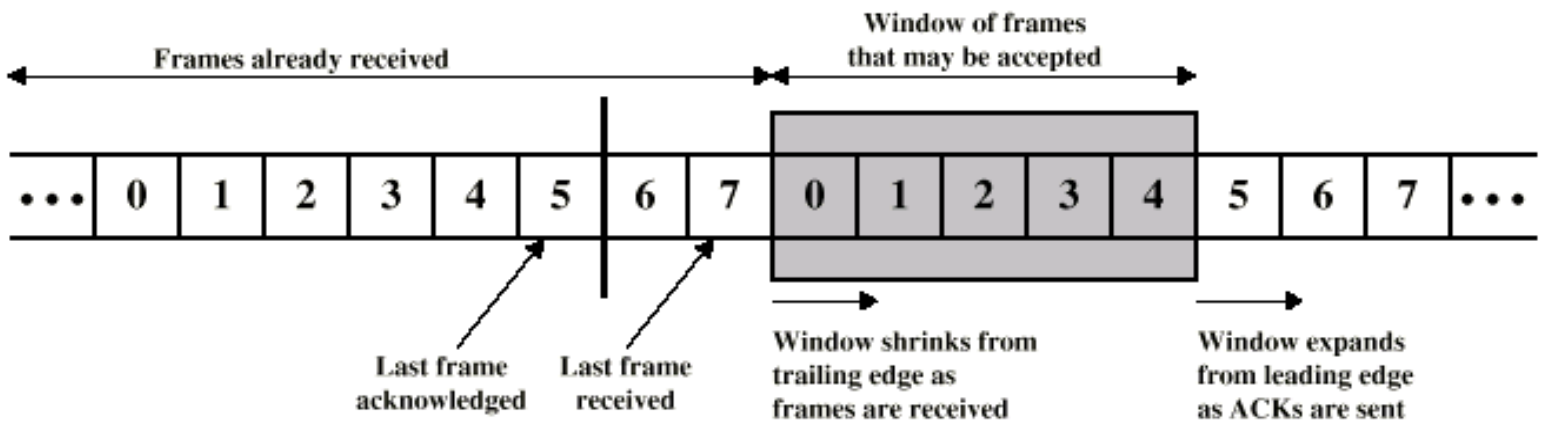

(b) Receiver's perspective

Example of a Sliding Window Protocol (W = 7)

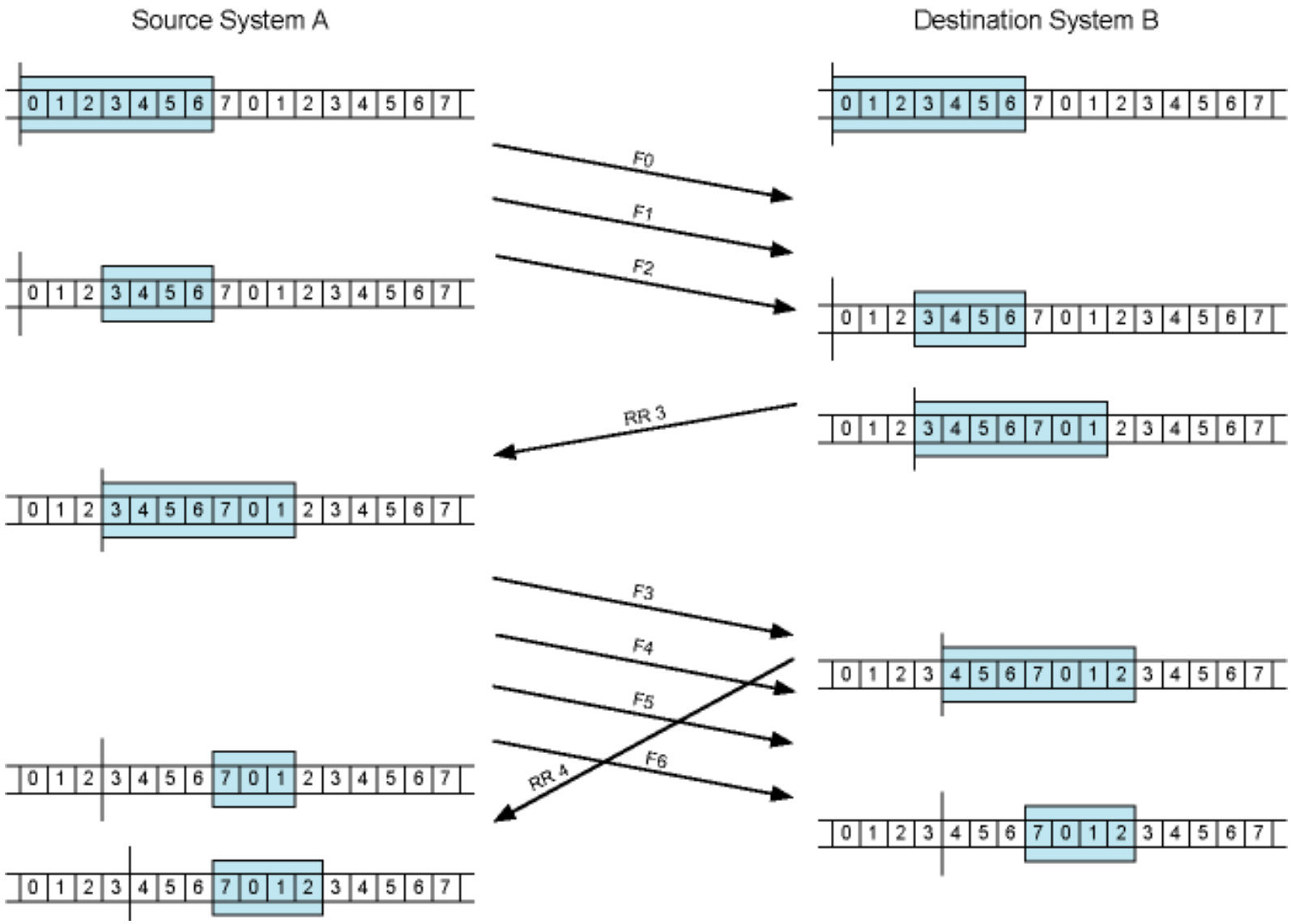

Sliding Window Enhancements in Implementation

- Receiver can acknowledge frames without permitting further transmission (*Receive Not Ready*)
  - Must send a normal acknowledgement to resume
- If the link is duplex, use *piggybacking*
  - Send data and ack together in one frame
    - frame has both data and ack fields
  - If no data to send, use acknowledgement frame
  - If data but no acknowledgement to send, send last acknowledgement number again

Sliding Windows Performance - 1

- two cases: W >= 2a+1 and W < 2a+1, where a=D/T
- details are on board

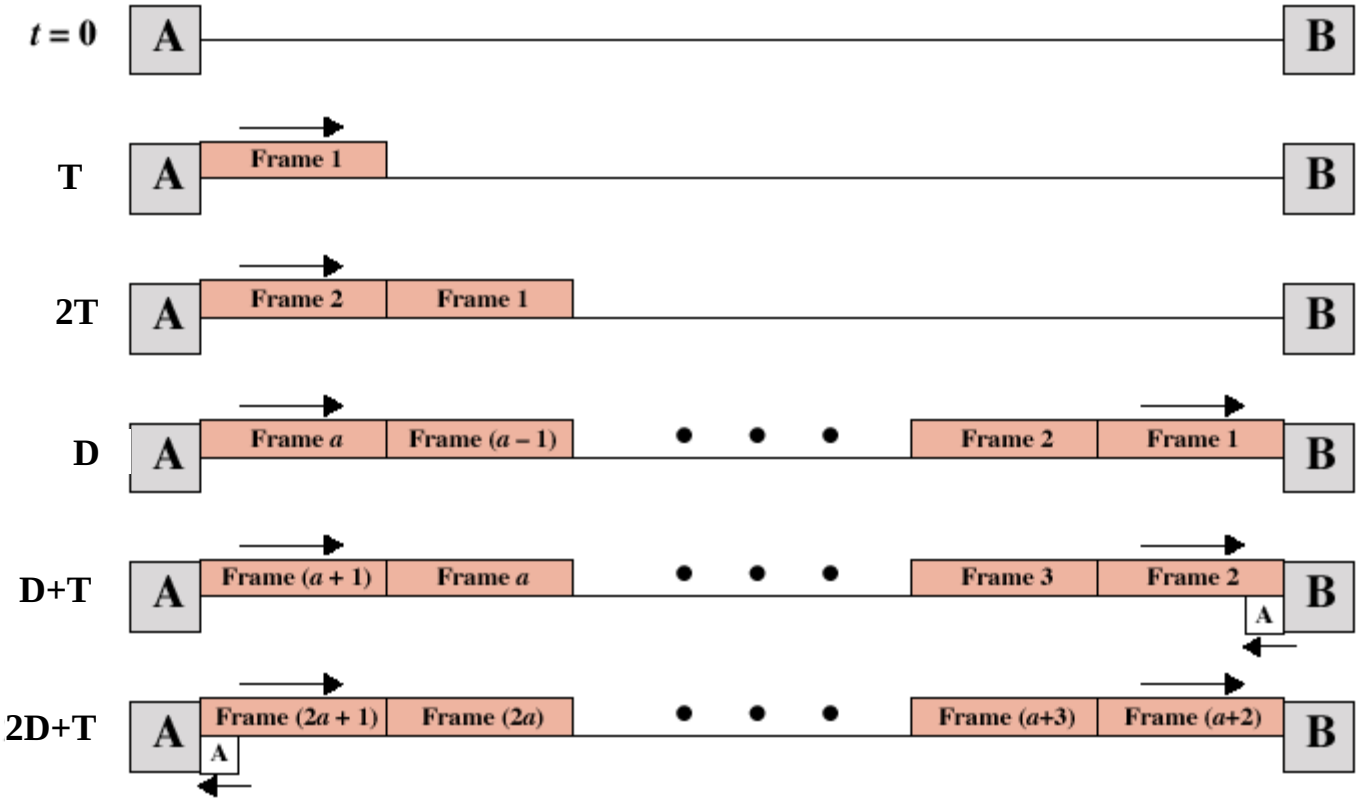

(a) $W \geq 2a + 1$ ($W.T \geq 2D+T$)

Sliding Windows Performance - 2

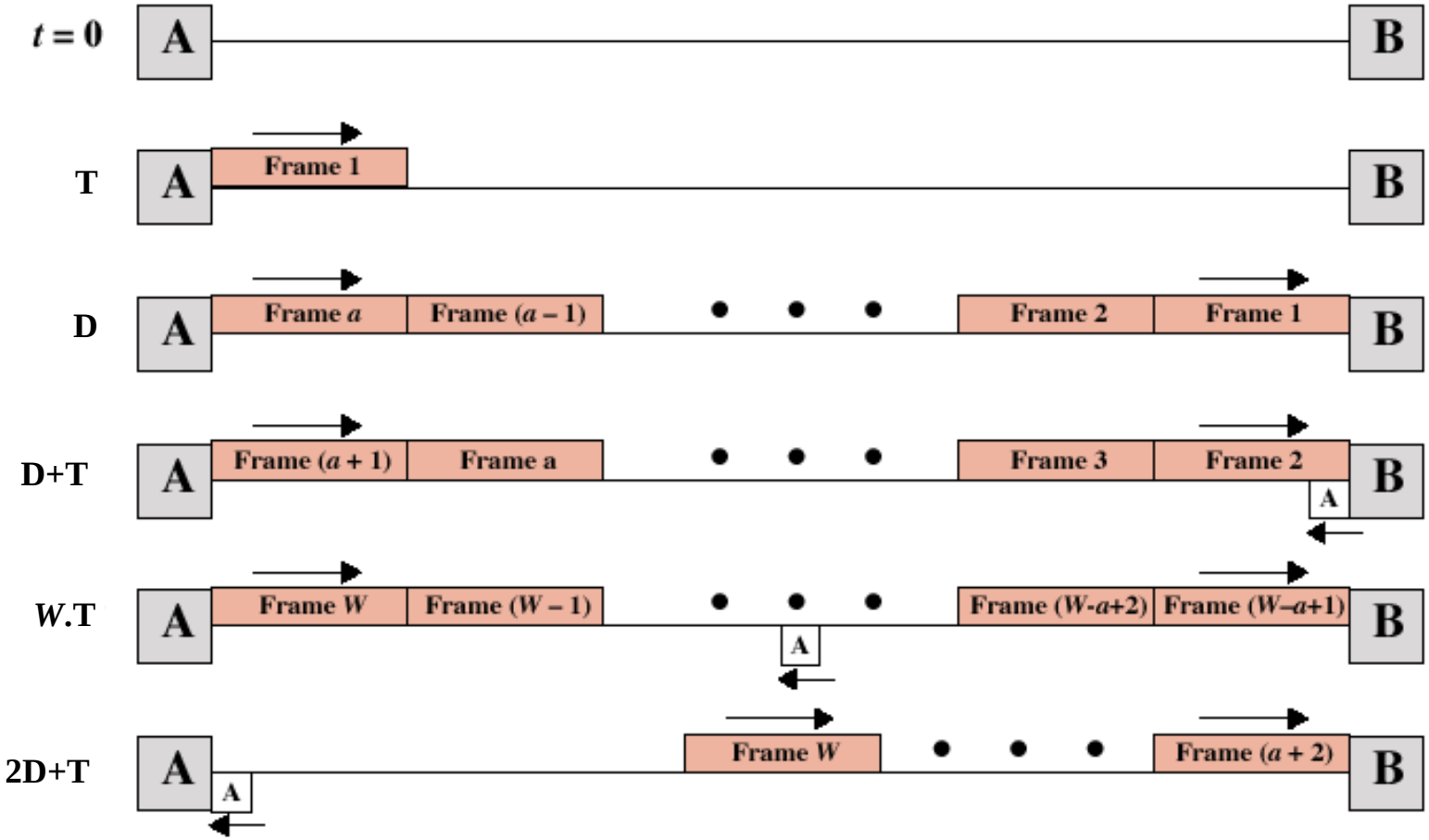

(b) $W < 2a + 1$ (W.T < 2D+T)

END OF MIDTERM EXAM

- The rest of this ppt file is not in the midterm exam coverage

Error Detection and Control

- So far we have seen flow control mechanisms where frames are transmitted without errors
  - in real life any transmission facility may introduce errors
- So we have to
  - detect errors
  - if possible, correct errors (not in the scope of CS 408)
  - adopt flow control algorithms such that erroneous frames are retransmitted

Types of Errors

- Single bit errors
  - isolated errors
  - affects (flips) one bit, nearby bits are not altered
  - not so common in real life
- Burst errors
  - a sequence of bits are affected
  - most common case
  - a burst error of length B is a contiguous sequence of B bits in which the first and the last and some intermediate bits are erroneously flipped.
    - not necessarily all bits between the first and the last one

Error Detection

- Additional bits added by transmitter as *error detection code*
  - receiver checks this code

- Parity
  - single bit added to the end of the data
  - Value of parity bit is such that data and parity have even (even parity) or odd (odd parity) number of ones
  - Even number of bit errors goes undetected
    - thus not so useful

Error Detection Process using Cyclic Redundancy Check

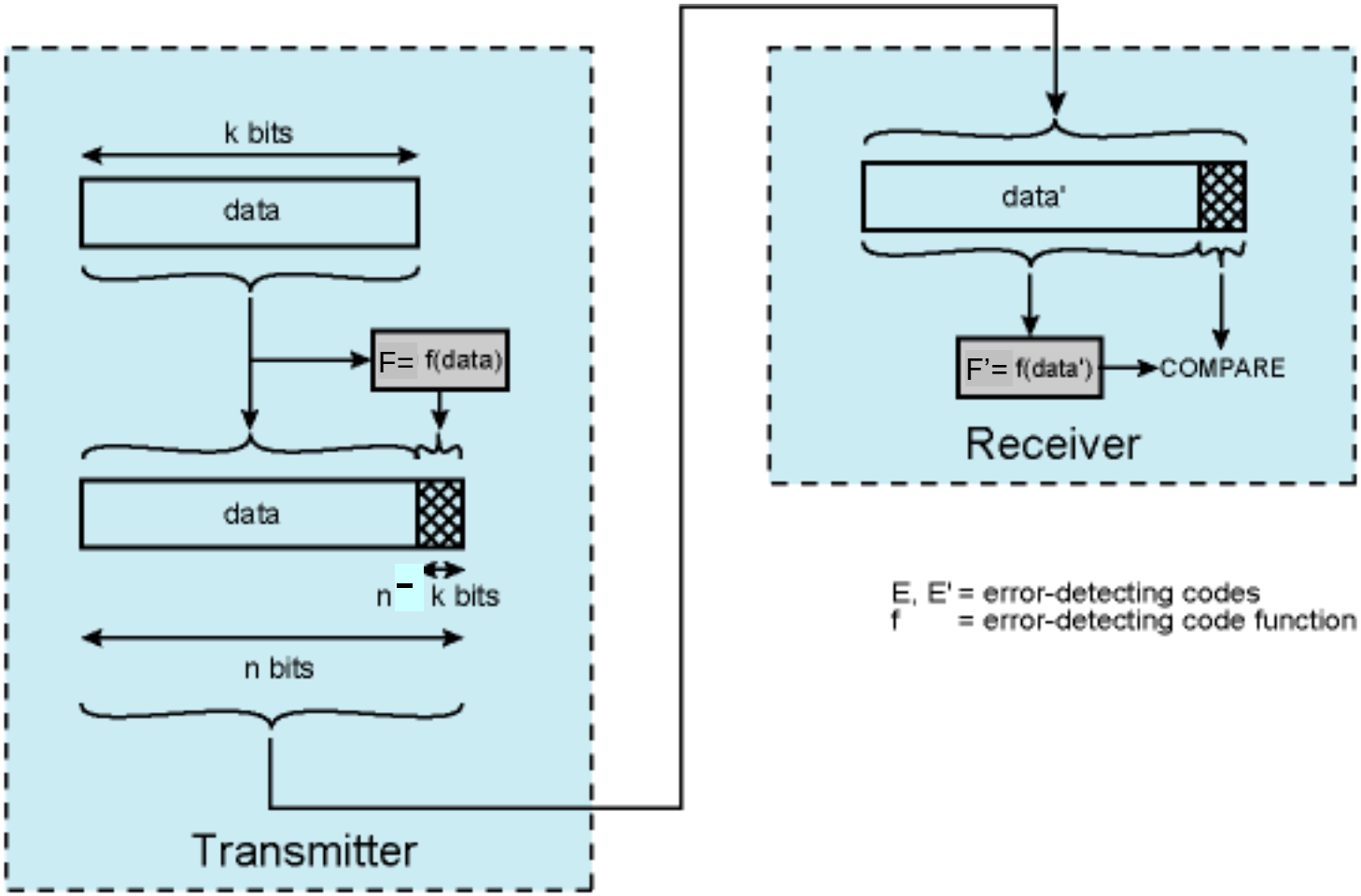

Cyclic Redundancy Check (CRC)

- For a data block of *k* bits, transmitter generates *n-k* bit frame check sequence (FCS) and appends it to the end of the data bits
- Transmits *n* bits, which is exactly divisible by some number (generator)
  - the length of the generator is *n-k*+1 and first and last bits are 1
- Receiver divides the received frame by generator
  - If no remainder, assume no error
- Division is binary division (not the same as integer or real division)
- See board for the math details and example

Cyclic Redundancy Check (CRC)

- Standard CRCs (generators are standard)
  - checks all single, double and odd number of errors
  - checks all burst errors with length less than or equal to the length of FCS (n-k)
  - checks most of the burst errors of longer length
    - for bursts of length n-k+1 (length of generator), probability of an undetected error is $1/2^{n-k-1}$
    - for longer bursts, probability of an undetected error is $1/2^{n-k}$

Error Control

- Actions to be taken against
  - Lost frames
  - Damaged frames
- Automatic repeat request (ARQ) mechanism components
  - Error detection
  - Positive acknowledgment
  - Retransmission after timeout
  - Negative acknowledgement and retransmission

Automatic Repeat Request (ARQ)

- Stop-and-wait ARQ
- Go-back-N ARQ
- Selective-reject (selective retransmission) ARQ

Stop and Wait ARQ

- Source transmits single frame
- Wait for ACK
- If received frame is damaged, discard it
  - If transmitter receives no ACK within timeout, retransmits
- If ACK damaged,transmitter will not recognize it
  - Transmitter will retransmit after timeout
  - Receiver gets two copies of frame, but disregards one of them
  - Use ACK_0 and ACK_1
    - ACK_i means "I am ready to receive frame i"

Stop-and-Wait ARQ – Example

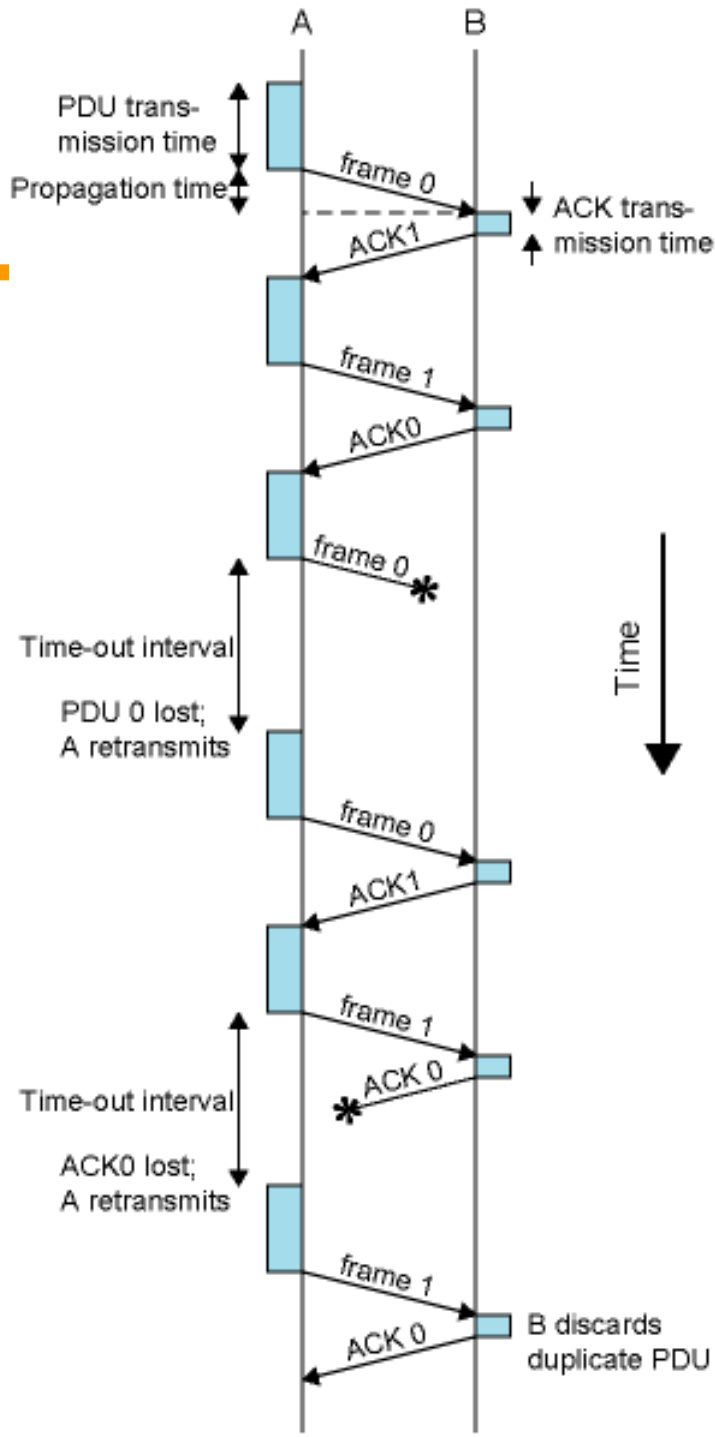

Stop and Wait - Pros and Cons

- Simple
- Inefficient

Go-Back-N ARQ

- Based on sliding window
- If no error, ACK as usual with next frame expected
  - ACK_i means "I am ready to receive frame i" and "I received all frames between i and my previous ack"
- Sender uses window to control the number of unacknowledged frames
- If error, reply with rejection (negative ack)
  - Discard that frame and all future frames until the frame in error received correctly
  - Transmitter must go back and retransmit that frame and all subsequent frames

Go-Back-N ARQ - Damaged Frame

- Receiver detects error in frame *i*
- Receiver sends "reject *i*"
- Transmitter gets "reject *i*"
- Transmitter retransmits frame *i* and all subsequent frames

Go-Back-N ARQ - Lost Frame (1)

- Frame *i* lost
- Transmitter sends frame *i*+1
- Receiver gets frame *i*+1 out of sequence
- Receiver sends "reject *i*"
- Transmitter goes back to frame *i* and retransmits it and all subsequent frames

Go-Back-N ARQ- Lost Frame (2)

- Frame *i* lost and no additional frame sent
- Receiver gets nothing and returns neither acknowledgment nor rejection
- Transmitter times out and sends acknowledgment frame with P bit set to 1 (this is actually a command for ack request)
  - Receiver interprets this as an ack request command which it acknowledges with the number of the next frame it expects (*i*)
- Transmitter then retransmits frame *i*

Go-Back-N ARQ- Damaged/Lost Acknowledgment

- Receiver gets frame *i* and sends acknowledgment (*i+1*) which is lost
- Acknowledgments are cumulative, so next acknowledgement (*i+n*) may arrive before transmitter times out on frame *i*

  ==> NO PROBLEM
- If transmitter times out, it sends acknowledgment request with P bit set, as before

Go-Back-N ARQ- Damaged Rejection

- As in lost frame (2)
  - sender asks the receiver the last frame received and continue by retransmitting next frame

Go-Back-N ARQ - Example

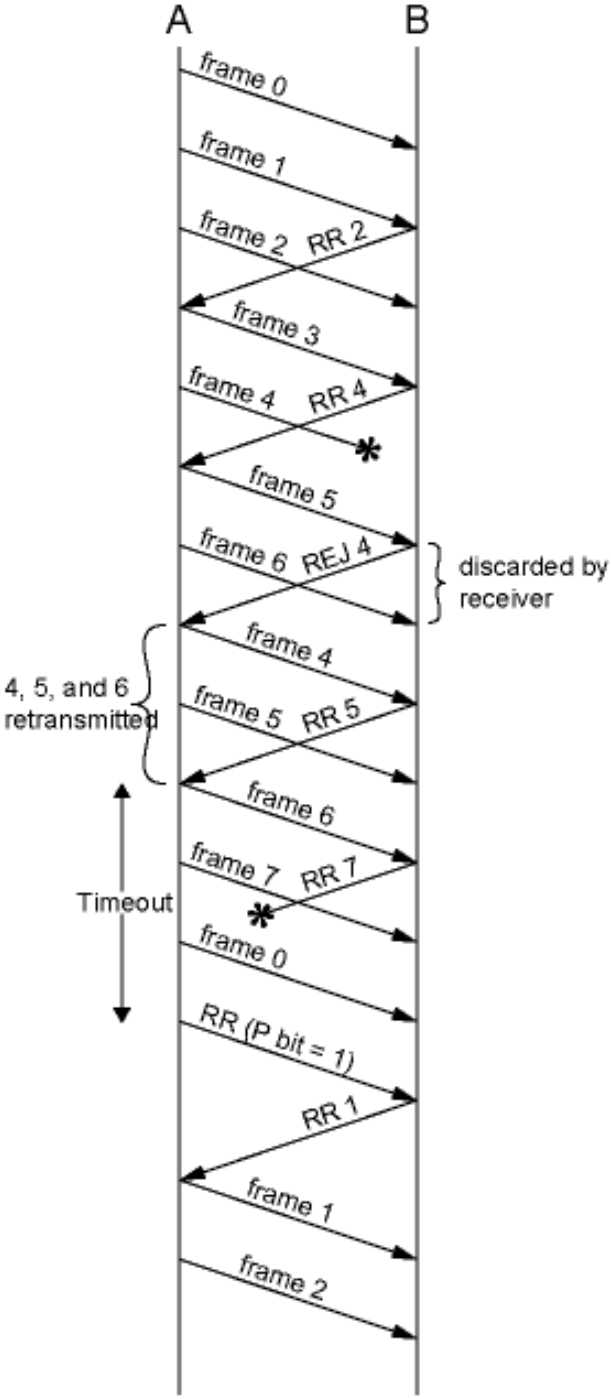

Selective Reject

- Also called *selective retransmission*
- Only rejected frames are retransmitted
- Subsequent frames are accepted by the receiver and buffered
- Minimizes retransmissions
- Receiver must maintain large enough buffer
- Complex system

Selective Reject - Diagram

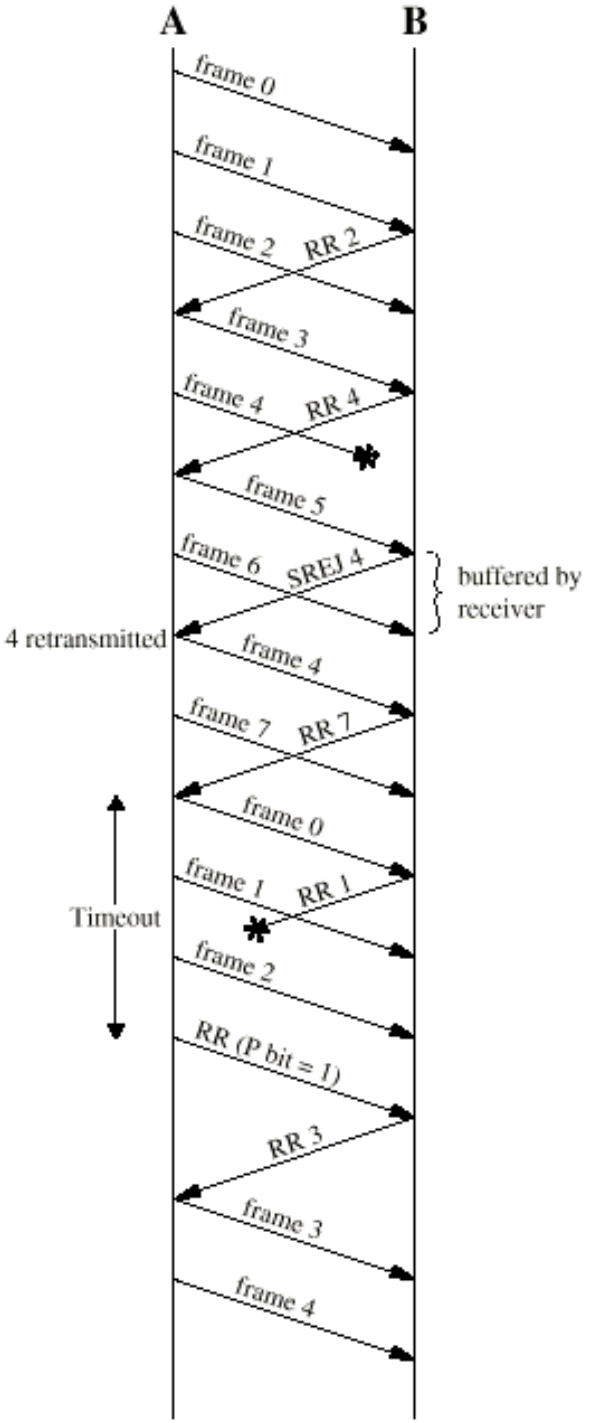

Issues

- RR with P=1 is from HDLC standard
  - pure protocol just have retransmissions after timeout
    - as explained in Tanenbaum

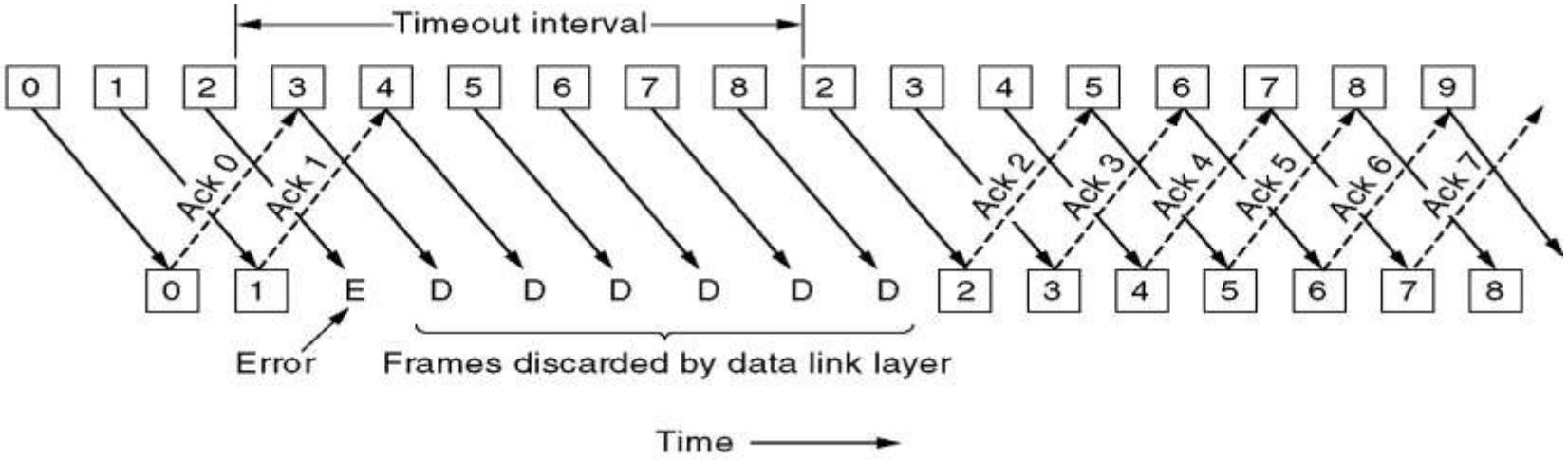

Issues – Window Size

- Given n-bit sequence numbers, what is Max window size?
  - go-back-n ARQ → 2^n-1
    - Why?
    - what about receiver's window size?
      - It is 1, why?
  - selective-reject(repeat) → 2^{n-1}
    - Why?

Issues – Buffer Size

- Go-back-n ARQ
  - sender needs to keep a buffer equal to window size
    - for possible retransmissions
  - receiver does not need any buffer (for flow/error control)
    - why?
- Selective reject
  - sender needs to keep a buffer of window size for retransmissions
  - receiver keeps a buffer equal to window size

Issues - Performance

- Notes on board
- Appendix at the end of Chapter 14
  - selective reject ARQ is not in the book

High Level Data Link Control

- HDLC
- ISO Standard
- Basis for some other DLL protocols

HDLC Station Types

- Primary station
  - Controls operation of link
  - Frames issued are called commands
- Secondary station
  - Under control of primary station
  - Frames issued called responses
- Combined station
  - May issue commands and responses

HDLC Link Configurations

- Unbalanced
  - One primary and one or more secondary stations
  - Supports full duplex and half duplex
- Balanced
  - Two combined stations
  - Supports full duplex and half duplex

HDLC Transfer Modes (1)

- Normal Response Mode (NRM)
  - Unbalanced configuration
  - Primary initiates transfer to secondary
  - Secondary may only transmit data in response to command from primary
  - Terminal-host communication
    - Host computer as primary
    - Terminals as secondary
  - not so common nowadays

HDLC Transfer Modes (2)

- Asynchronous Balanced Mode (ABM)
  - Balanced configuration
  - Either station may initiate transmission without receiving permission
  - Most widely used

Frame Structure

- All transmissions in frames
- Single frame format for all data and control exchanges

Frame Structure Diagram

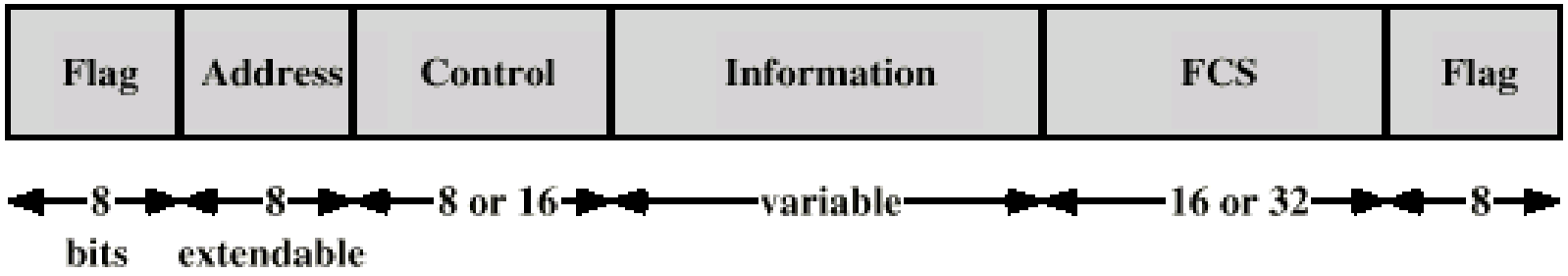

Flag Fields

- Delimit frame at both ends
- 01111110
- Receiver hunts for flag sequence to synchronize
- Bit stuffing used to avoid confusion with data containing 01111110
  - 0 inserted after every sequence of five 1s
  - If receiver detects five 1s it checks next bit
    - If 0, it is deleted
    - If 1 and seventh bit is 0, accept as flag
  - If sixth and seventh bits 1, sender is indicating abort

Bit Stuffing Example

Original Pattern:

111111111111011111101111110

After bit-stuffing

111110111111011011111010111111010

Address Field

- Identifies secondary station that sent or will receive frame
- Usually 8 bits long
- May be extended to multiples of 7 bits with prior agreement
  - leftmost bit of each octet indicates that it is the last octet (1) or not (0)

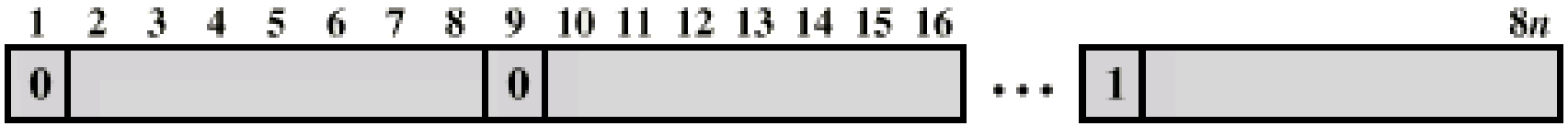

(b) Extended Address Field

Frame Types

- Information - data to be transmitted to user
  - Acknowledgment is piggybacked on information frames
- Supervisory – ARQ messages (RR/RNR/REJ/SREJ) when piggyback not used
- Unnumbered – supplementary link control functions. For examples,
  - setting the modes
  - disconnect
- Control field is different for each frame type

Control Field Diagram

	1	2	3	4	5	6	7	8
I: Information	0	N(S)			P/F	N(R)		
S: Supervisory	1	0	S		P/F	N(R)		
U: Unnumbered	1	1	M		P/F	M		

N(S) = Send sequence number
N(R) = Receive sequence number
S = Supervisory function bits
M = Unnumbered function bits
P/F = Poll/final bit

(c) 8-bit control field format

	1	2	3	4	5	6	7	8	9	10	11	12	13	14	15	16
Information	0	N(S)							P/F	N(R)						
Supervisory	1	0	S		0	0	0	0	P/F	N(R)						

(d) 16-bit control field format

Poll/Final Bit

- Use depends on context. A typical use is below.
- Command frame
  - P bit set to 1 to solicit (poll) supervisory frame from peer
- Response frame
  - F bit set to 1 to indicate response to soliciting command

Information Field

- Only in information and some unnumbered frames
- Must contain integral number of octets
- Variable length

Frame Check Sequence Field

- FCS
- Error detection
- 16 bit CRC
- Optional 32 bit CRC

HDLC Operation

- Exchange of information, supervisory and unnumbered frames
- Three phases
  - Initialization
  - Data transfer
  - Disconnect

Initialization

- Issue one of six *set-mode* commands
  - Signals other side that initialization is requested
  - Specifies mode (NRM, ABM, ARM)
  - Specifies 3- or 7-bit sequence numbers
- If request accepted HDLC module on other side transmits unnumbered acknowledged (UA) frame
- If request rejected, disconnected mode (DM) sent
- All sent as unnumbered frames

Data Transfer

- Both sides may begin to send user data in I-frames
  - N(S): sequence number of outgoing I-frames
    - modulo 8 or 128, (3- or 7-bit)
  - N(R) acknowledgment for I-frames received
    - seq. number of I-frame expected next
- S-frames are also used for flow and error control
  - Receive ready (RR) frame acknowledges last I-frame received
    - Indicating next I-frame expected
    - Used when there is no reverse data
  - Receive not ready (RNR) acknowledges, but also asks peer to suspend transmission of I-frames
    - When ready, send RR to restart
  - REJ initiates go-back-N ARQ
    - Indicates last I-frame received has been rejected
    - Retransmission is requested beginning with N(R)
  - Selective reject (SREJ) requests retransmission of single frame

Disconnect

- Send disconnect (DISC) frame
- Remote entity must accept by replying with UA
  - Informs layer 3 user about the termination of connection

Examples of Operation (1)

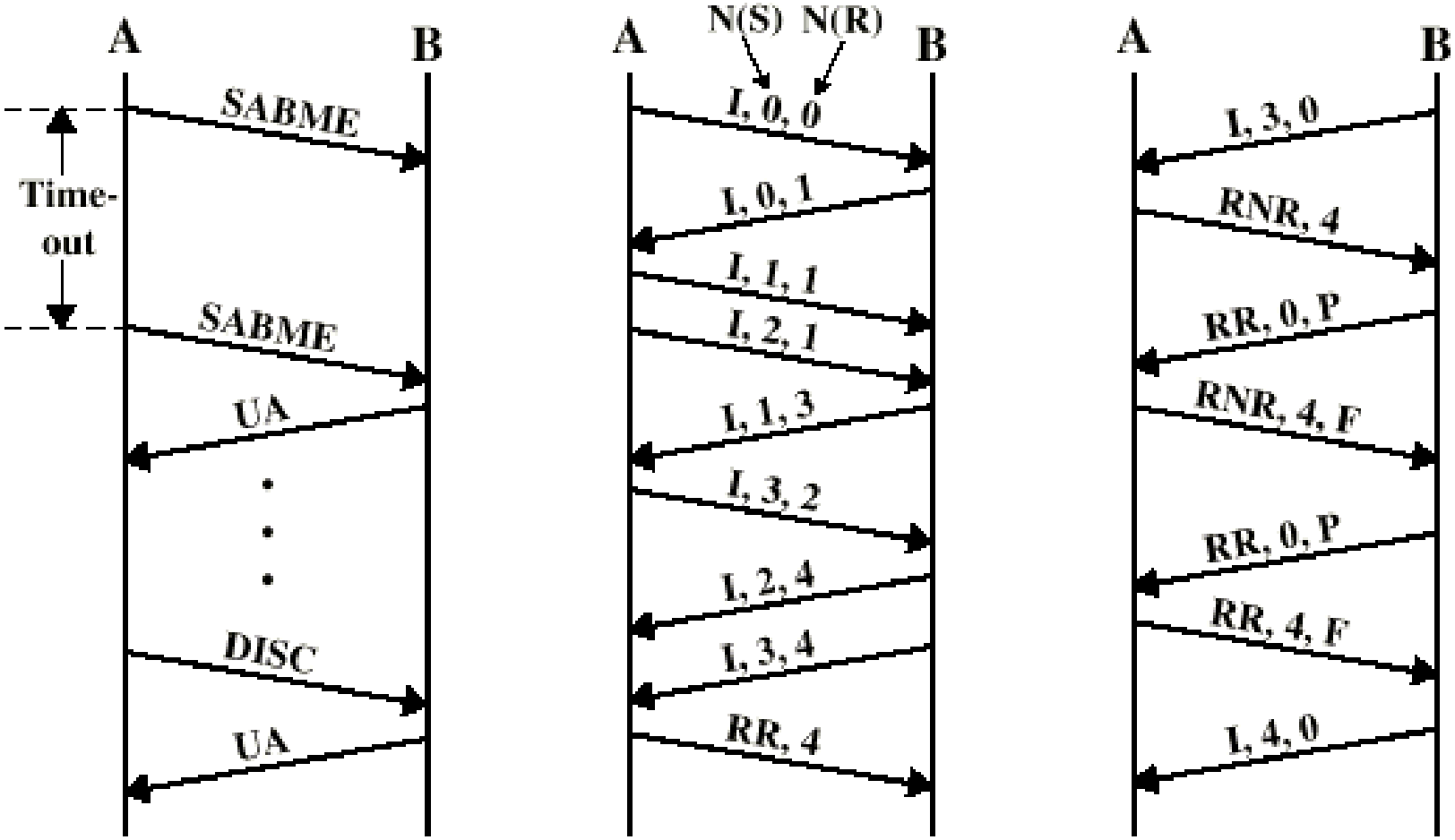

(a) Link setup and disconnect (b) Two-way data exchange (c) Busy condition

Examples of Operation (2)

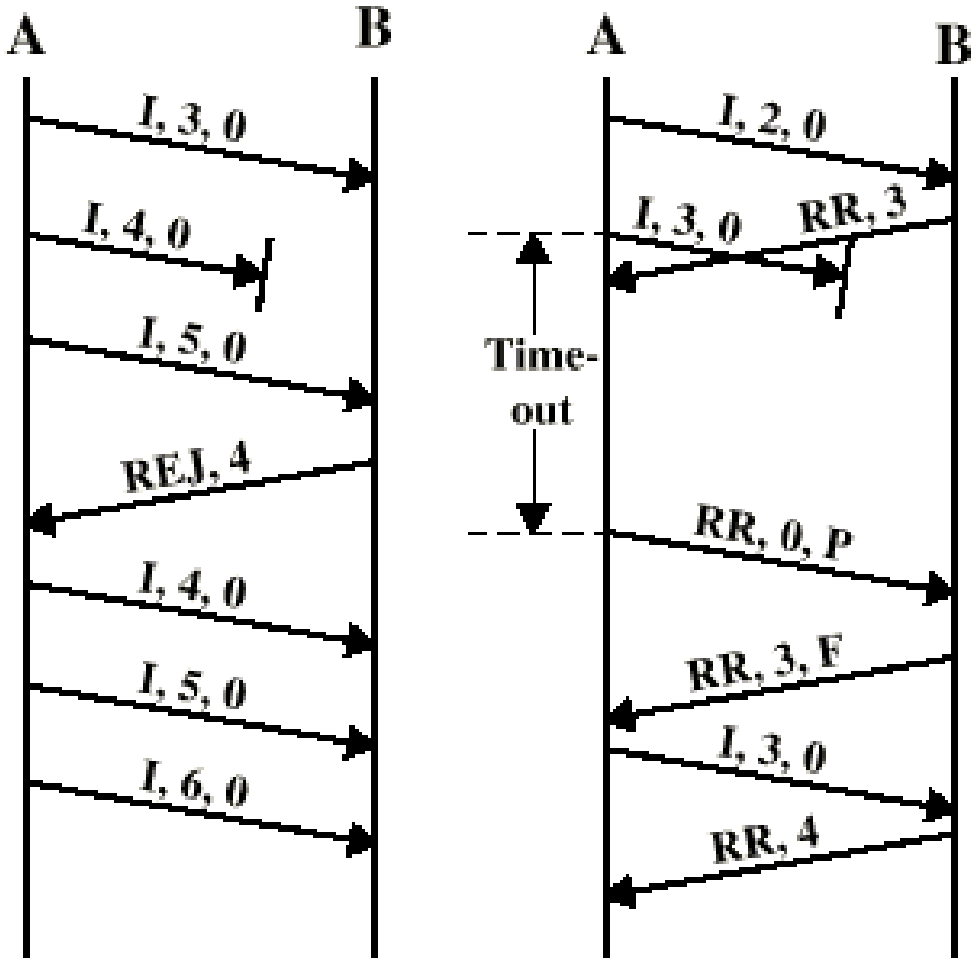

(d) Reject recovery (e) Timeout recovery

Other DLC Protocols (LAPB,LAPD)

- Link Access Procedure, Balanced (LAPB)
  - Part of X.25 (ITU-T)
  - Subset of HDLC - ABM (Async. Balanced Mode)
  - Point to point link between user and packet switching network node
  - HDLC frame format
- Link Access Procedure, D-Channel (LAPD)
  - Part of ISDN (ITU-T)
  - ABM
  - Always 7-bit sequence numbers (no 3-bit)
  - always 16-bit CRC
  - 16-bit address field

Other DLC Protocols (LLC)

- Logical Link Control (LLC)
  - IEEE 802
  - For LANs (Local Area Networks)
  - Link control split between medium access control layer (MAC) and LLC (on top of MAC)
  - Different frame format
    - Two addresses needed (sender and receiver) – actually at MAC layer
    - Sender and receiver SAP addresses
    - Control field is same as HDLC (16-bit version for I and S frames; 8-bit for U frames)
  - No primary and secondary - all stations are peers
  - Error detection at MAC layer
    - 32 bit CRC

MAC control	Dest. MAC address	Source MAC address	DSAP	SSAP	LLC control	Info.	FCS
variable	16 or 48	16 or 48	8	8	16*	variable	32

Other DLC Protocols (LLC)

- LLC Services
  - 3 alternatives
  - Connection Mode Services
    - Similar to HDLC ABM
  - Unacknowledged connectionless services
    - no connection setup
    - No flow-control, no error control, no acks (thus not reliable)
    - good to be used with TCP/IP. Why?
  - Acknowledged Connectionless Service
    - No connection setup
    - reliable communication