Ethernet

Dept. of Computer Science, University of Rochester

Types of Multiple Access Protocols

Three broad classes:

- Channel partitioning
  - divide channel into smaller "pieces" (time slots, frequency, code)
  - allocate piece to node for exclusive use
- Random access
  - channel not divided, allow collisions
  - "recover" from collisions
- Centrally controlled/coordinated
  - tightly coordinate shared access to avoid collisions

Examples of MAC protocols

- Channel partitioning
  - Time Division, Frequency Division, Code Division
- Random access
  - ALOHA, S-ALOHA, CSMA, CSMA/CD
  - CSMA/CD used in Ethernet
- Centrally controlled
  - polling from a central site
  - controlled by a token

"Centrally Controlled" MAC protocols

Polling:

- master node "invites" slave nodes to transmit in turn
- concerns:
  - polling overhead (bandwidth & latency)
  - single point of failure (master)

Token passing:

- control **token** passed from one node to next sequentially.
- transmit only when holding the token
- concerns:
  - token overhead (bandwidth & latency)
  - single point of failure (token)

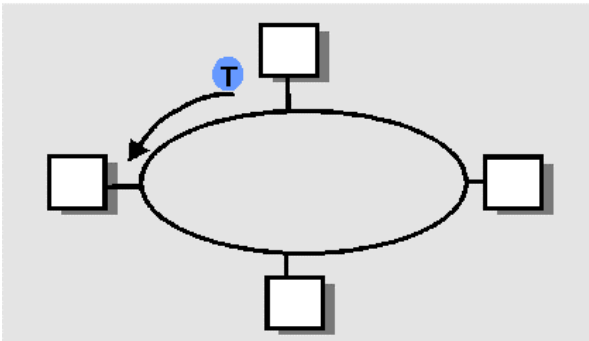

Ethernet

"dominant" for local-area networks:

- Developed at Xerox PARC in 1970s
- First widely used LAN technology
- Random access multiple access control

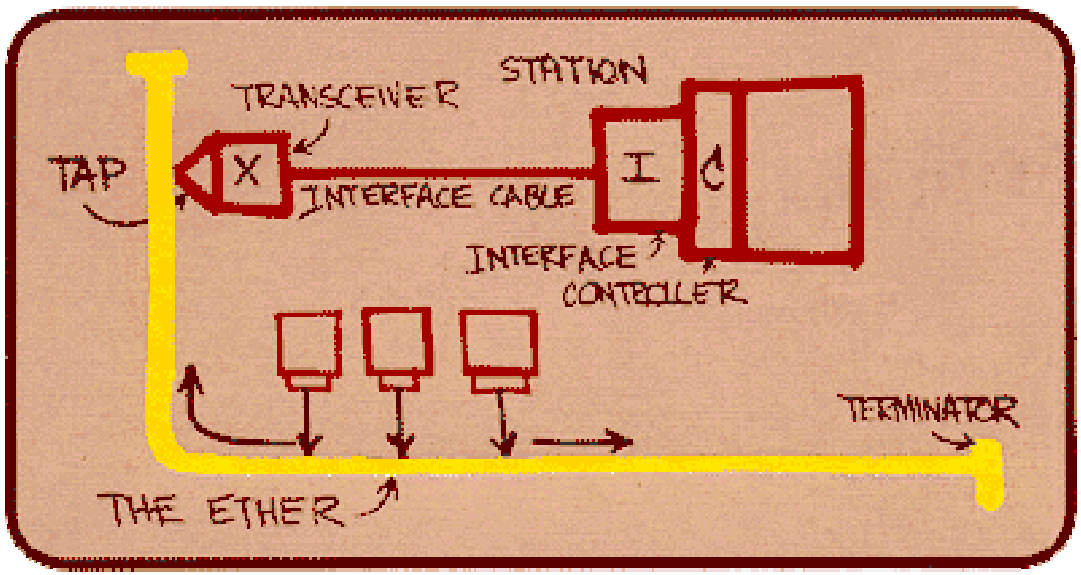

Metcalfe's Ethernet sketch

Ethernet Frame Structure

Sending adapter encapsulates data payload in Ethernet frame

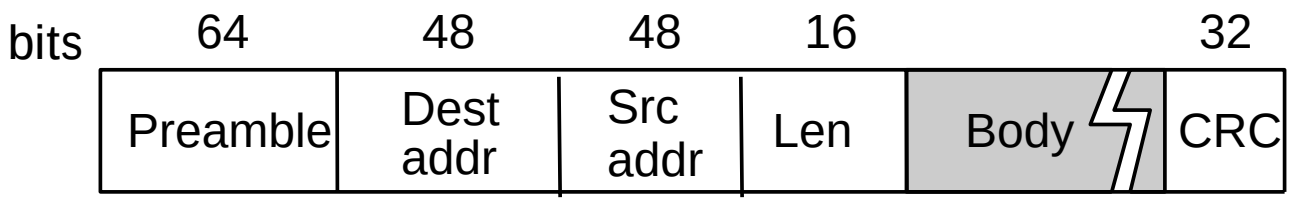

- Preamble:
  - 7 bytes with pattern 10101010 followed by one byte with pattern 10101011
  - indicating the beginning of a frame, synchronizing receiver/sender clocks
- Addresses:
  - link layer addresses, different from IP addresses
- Length: indicates the length of the body field (max 1500bytes)
- CRC: checked at receiver
  - if error is detected, the frame is simply dropped

Connectionless, Unreliable

- Connectionless: No handshaking between sending and receiving adapter.
- Unreliable:
  - corrupted frames are simply dropped
  - no attempt is made on the receiver to detect and recover lost frames
  - corrupted or lost packets may be recovered by higher layer protocols, e.g. TCP

Ethernet uses CSMA/CD

- Random access, no synchronized clocks
- adapter doesn't transmit if it senses that some other adapter is transmitting, that is, carrier sense
- transmitting adapter aborts when it senses that another adapter is transmitting, that is, collision detection
- Before attempting a retransmission, adapter waits a random delay, that is, random backoff
  - why? how?

Ethernet's CSMA/CD (more)

Exponential Backoff:

- Goal: adapt retransmission attempts to estimated current load
  - heavy load: random wait will be longer
- first collision: delay K units of time, K is randomly chosen from {0,1}
- after second collision: choose K from {0,1,2,3}…
- after ten collisions, choose K from {0,1,2,3,4,…,1023}

Backoff wait time:

- a unit of time is about 5 microsec for 100 Mbps Ethernet.
- for K=1023, wait time is about 5 millisec.

Ethernet Efficiency

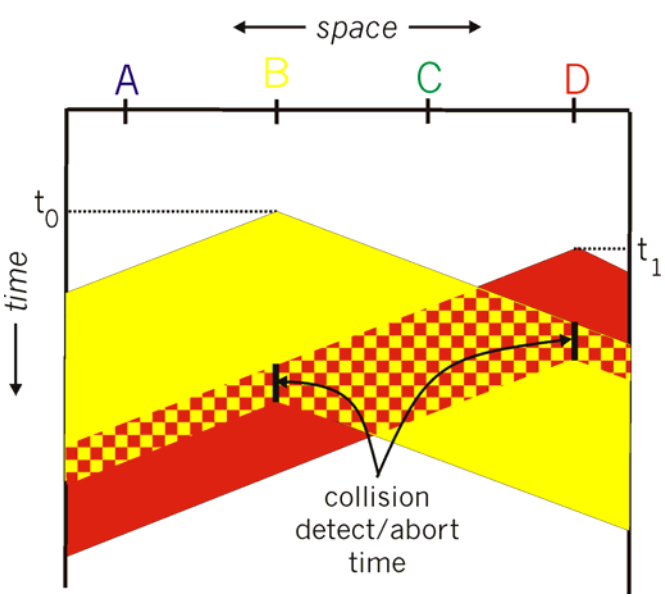

- t_{prop} = max prop between 2 nodes
- t_{trans} = time to transmit a frame

$$\text{efficiency} \approx \frac{1}{1 + 5t_{prop} / t_{trans}}$$

- Efficiency goes to 1 as t_{prop} goes to 0 or as t_{trans} goes to infinity

Much more efficient than ALOHA, but still decentralized and simple

Ethernet Technologies: 10Base2

- 10: 10Mbps; 2: under 200 meters max cable length
- thin coaxial cable in a bus topology

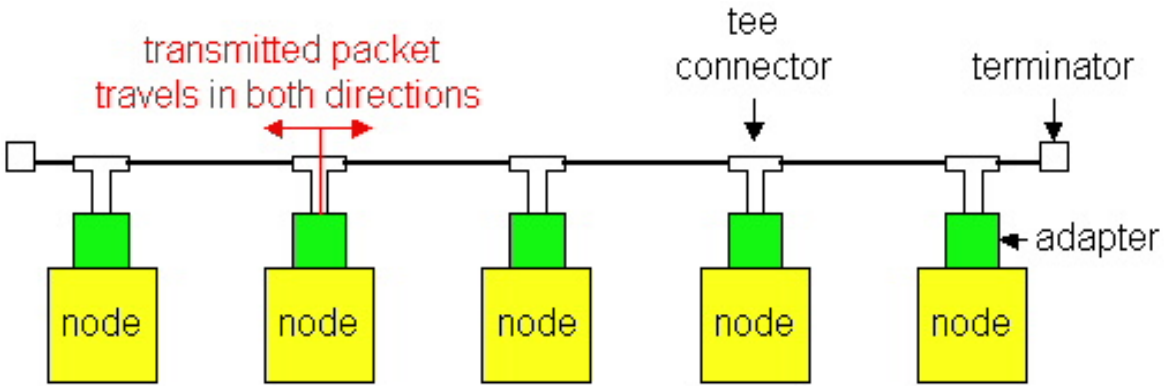

- has become a legacy technology

10BaseT and 100BaseT

- 10/100 Mbps rate; latter called "fast ethernet"
- T stands for Twisted Pair
- Nodes connect to a hub: "star topology"; 100 m max distance between nodes and hub
- Hubs are essentially physical-layer bit-level :
  - bits coming in one link go out all other links
  - no collision detection, no frame buffering
  - may provide net management functionality
- Repeaters are physical-layer frame-level signal regenerators – avoid max distance limitation

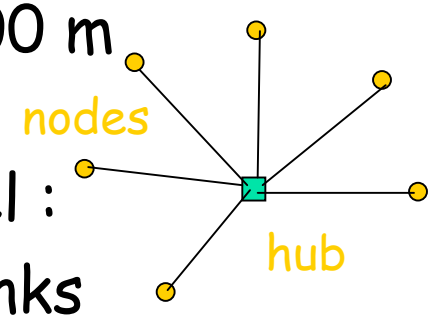

Encoding

- 10BaseT, 10Base2 – Manchester encoding
- 100BaseT – 4B5B encoding
- Allows clocks in sending and receiving nodes to synchronize to each other
  - no need for a centralized, global clock among nodes
- Still remember their efficiencies??

Gbit Ethernet

- use standard Ethernet frame format
- efficiency of CSMA/CD

$$\text{efficiency} = \frac{1}{1 + 5t_{prop} / t_{trans}}$$

- short distances between nodes to be efficient!
- fortunately today's Ethernet links are not shared
- 10 Gbps now!
  - optical fiber as well as copper cable
  - if latency doesn't change, what apps can benefit?

Where is link layer implemented?

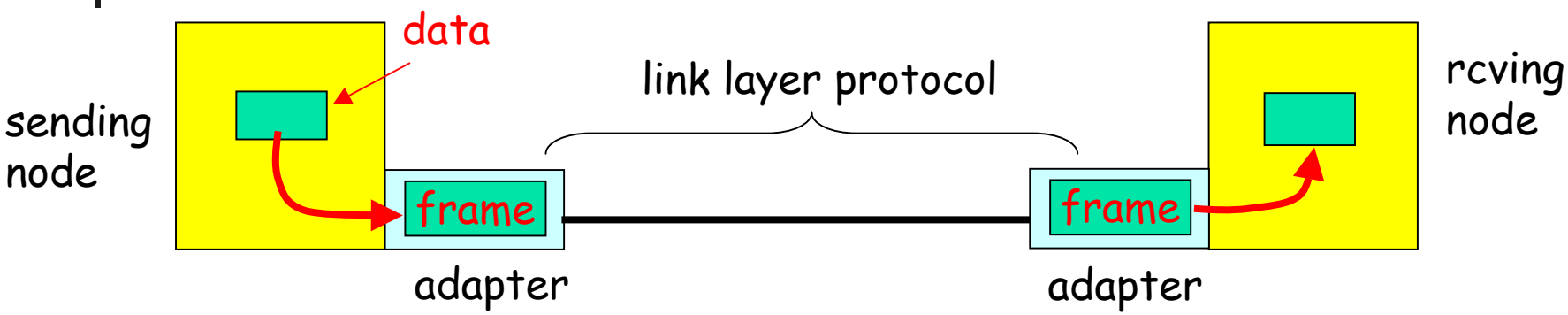

- link layer implemented in "adaptor" (aka NIC)
  - Ethernet card, 802.11 card
- sending side:
  - encapsulates data in a frame
  - adds error checking bits, rdt, flow control, etc.
- receiving side
  - looks for errors, rdt, flow control, etc
  - extracts data, passes to OS at recving node
- adapter is semi-autonomous
  - has its own processor/buffer

Interaction with the Host

- Control from the host
  - read/write control status registers
- Notifying the host
  - interrupts
- Moving data
  - direct Memory Access (DMA)
  - programmed I/O
- Device drivers (device-specific software executed by Host CPU)
  - initialize the adapter
  - manipulate the adapter (e.g. send a frame)
  - handle interrupts

Link-layer Addresses

Link-layer (or MAC, LAN) address:

- uniquely identifying each node (or adapter) connected to a shared link
  - ⇒ integral to multiple access protocols
- 48 bits
- broadcast address – "FF-FF-FF-FF-FF-FF"

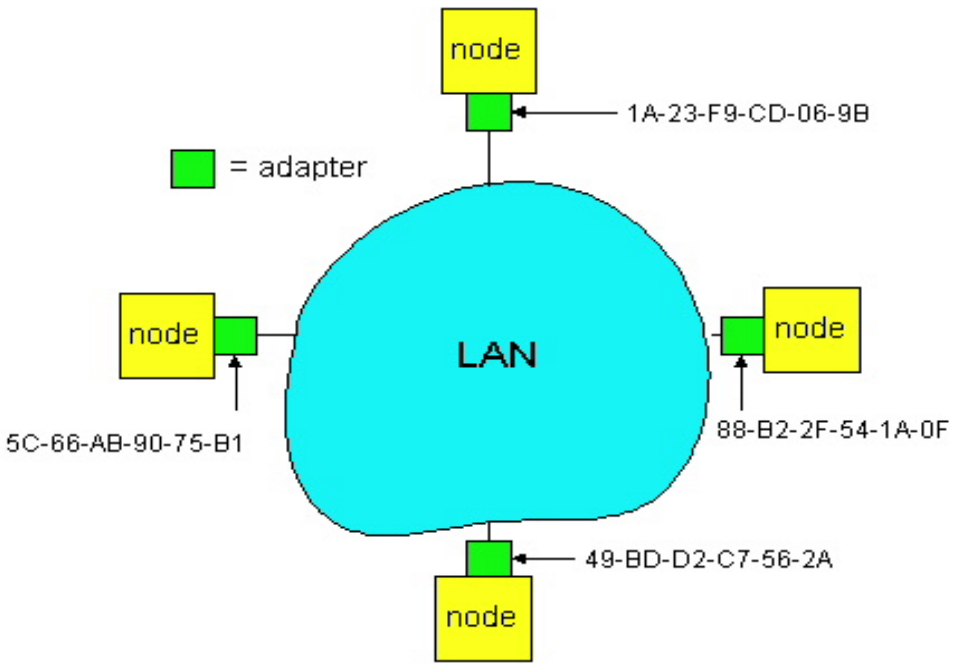

Link-layer Addresses (cont.)

- Universal uniqueness:
  - Link-layer address burned in the adapter ROM
  - no two adapters anywhere have the same address
- How is this achieved?
  - MAC address allocation administered by IEEE
  - manufacturer buys portion of MAC address space (to assure uniqueness)
- Impact:
  - portability: can move adaptor from one network to another (no configuration required!)
  - flat, no hierarchy
- Caveat:
  - OS may instruct the adapter to use a different MAC address

Coexistence of link-layer addresses and network-layer addresses.

Disclaimer

- Parts of the lecture slides contain original work of James Kurose, Larry Peterson, and Keith Ross. The slides are intended for the sole purpose of instruction of computer networks at the University of Rochester. All copyrighted materials belong to their original owner(s).