CS 457 – Lecture 19
Global Internet - BGP

Fall 2011

Decision Process

- Calculate degree of preference for each route in Adj-RIB-In as follows (apply following steps until one route is left):
  - select route with highest LOCAL-PREF
  - select route with shortest AS-PATH
  - apply MED (if routes learned from same neighbor)
  - select route with smallest NEXT-HOP cost

...Decision Process

  - select route learned from E-BGP peer with lowest BGP ID
  - select route from I-BGP neighbor with lowest BGP ID
- Install selected route in Loc-RIB
- Selectively disseminate routes to peers, update Adj-RIB-Out
- Done

Multi-homing

- With multi-homing, a single network has more than one connections to the Internet
- Improves reliability and performance:
  - can accommodate link failure
  - bandwidth is sum of links to Internet
- Multiple connections provide *load sharing* but *not* load balancing
  - BGP cannot do load balancing

Issues With Multi-homing

- Symmetric routing
  - while conventional wisdom prefers symmetric paths, many (most?) are asymmetric
- Packet re-ordering
  - may trigger TCP's fast retransmit algorithm
- Other concerns:
  - addressing, DNS, aggregation

Static Routing May Not Work

Static route from R1 to customer over L1
Static route from R2 to customer over L2

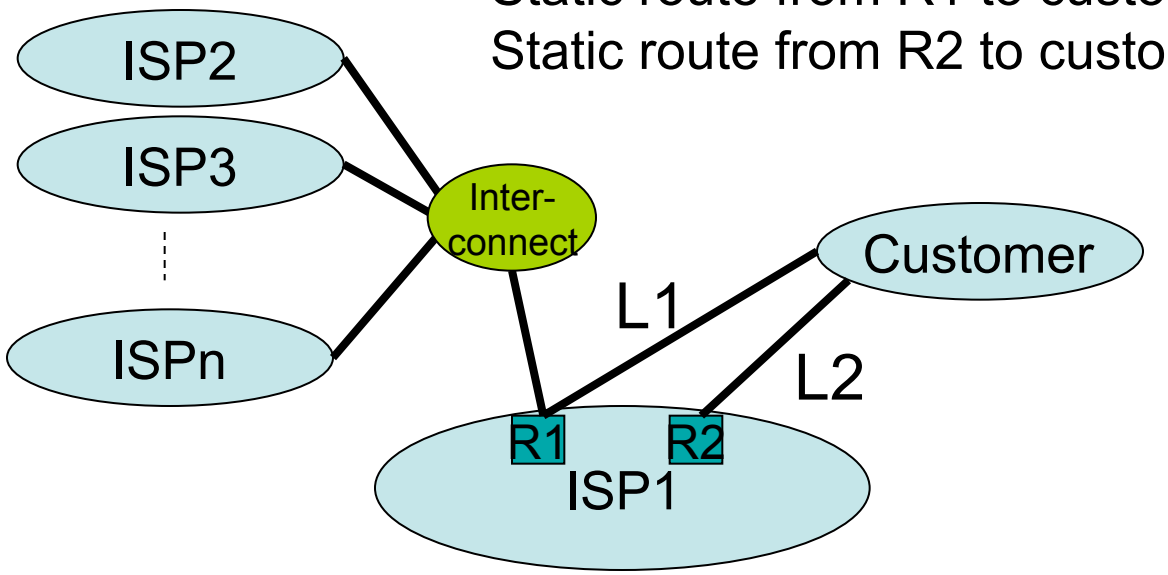

Static routing may send traffic from ISPs 2-n to customer over one link and traffic from ISP1 over the other link. Lacks flexibility.

Multi-homing with Multiple Providers

- Major issues:
  - addressing
  - aggregation
- Customer address space:
  - delegated by ISP1
  - delegated by ISP2
  - delegated by ISP1 and ISP2
  - obtained independently
- Advantages and disadvantages?

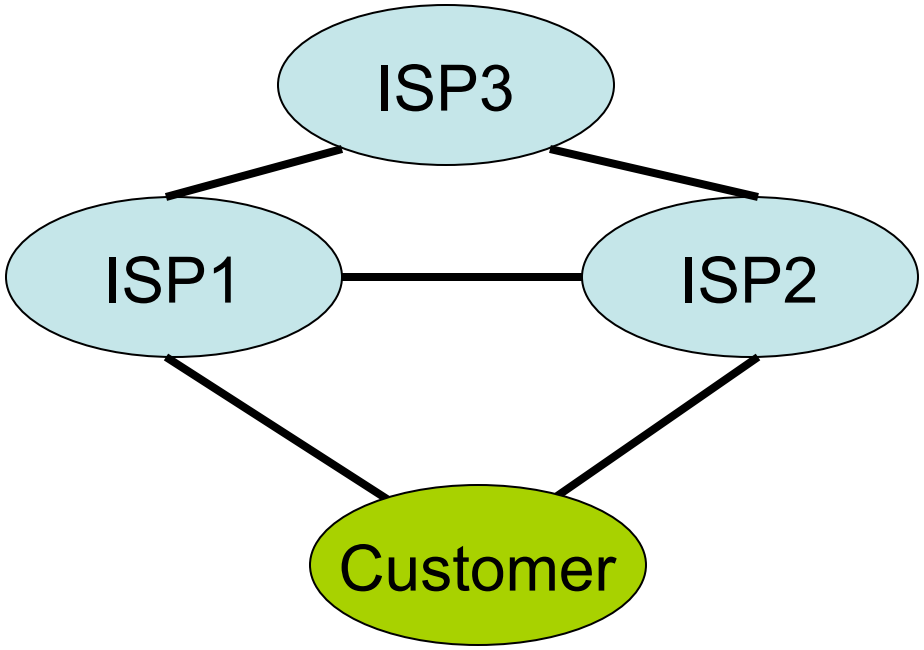

Case 1: Customer Uses Address Space From One ISP (1 or 2)

- Customer uses address space from ISP1
- ISP1 advertises /16 aggregate
- Customer advertises /24 route to ISP2
- ISP2 relays route to ISP1 and ISP3
- ISP2-3 use the /24 route
- ISP1 routes directly
- Problems with traffic load?

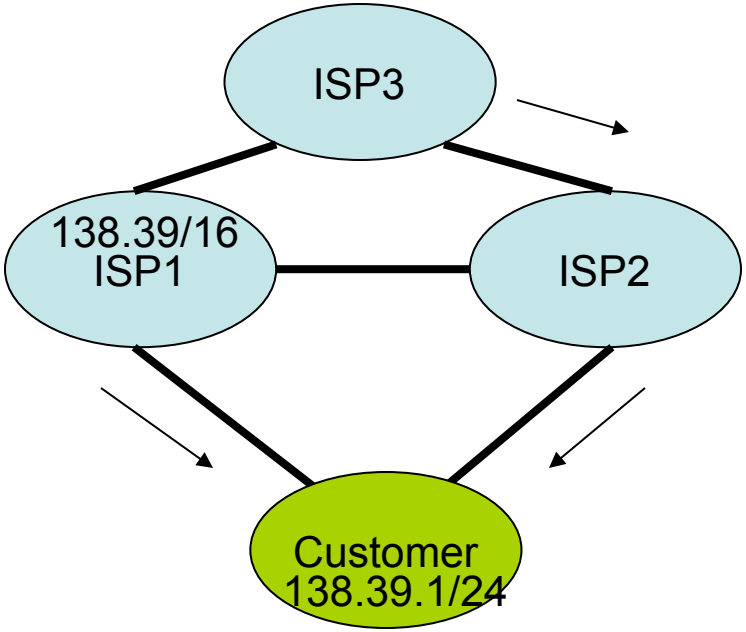

Case 2: Customer Uses Address Space From Both ISPs

- ISP1 and ISP2 continue to announce aggregates
- Load sharing depends on traffic to two prefixes
- Lack of reliability: if ISP1 link goes down, part of customer becomes inaccessible
- Customer may announce prefixes to both ISPs

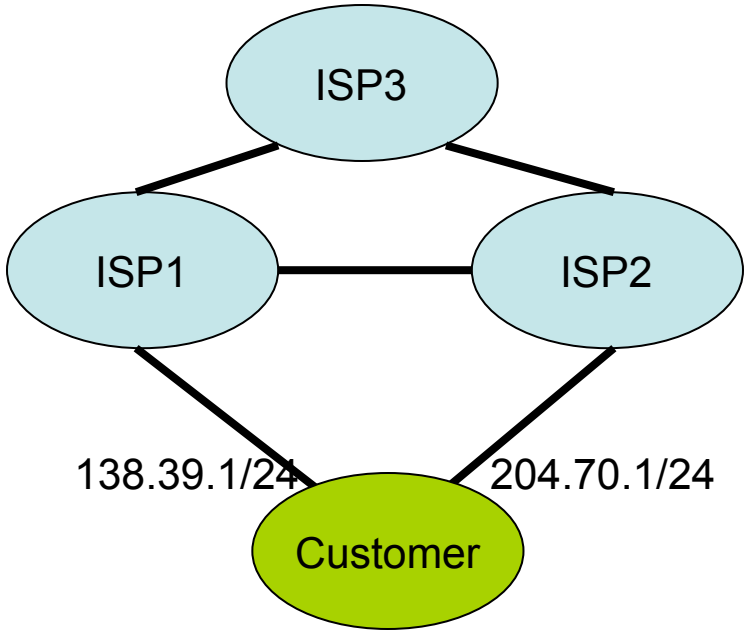

Case 3: Customer Uses Its Own Address Space

- Offers the most control, but at the cost of aggregation
- Still need to control paths:
  - suppose ISP1 large, ISP2-3 small – want traffic directly from ISP1, but ISP3 should send via ISP2
  - customer advertises artificially long path to ISP1, but local-pref attribute at ISP overrides
  - ISP3 learns shorter path from ISP2

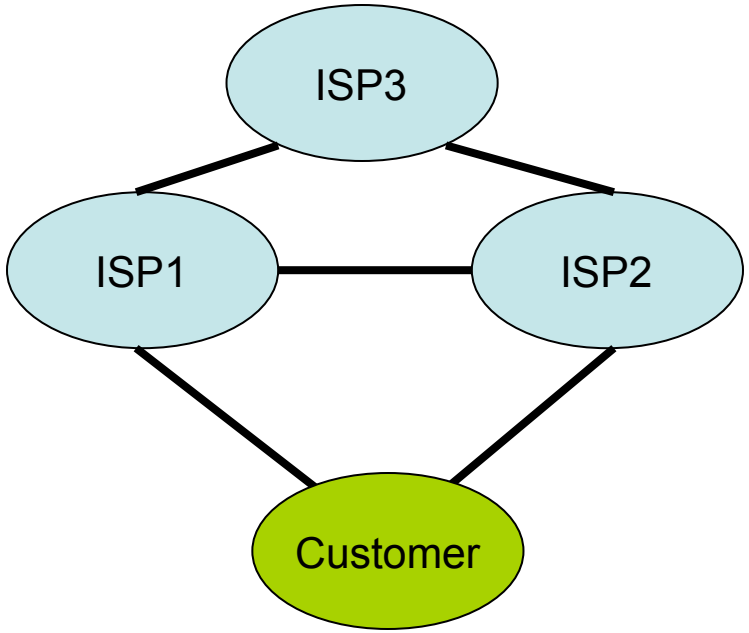

How can BGP express the following policies:

2 will not act as transit to 3

2 will not accept packets sourced in 1

1 will use the green path for packets destined to 4 and the red for packets destined to 5

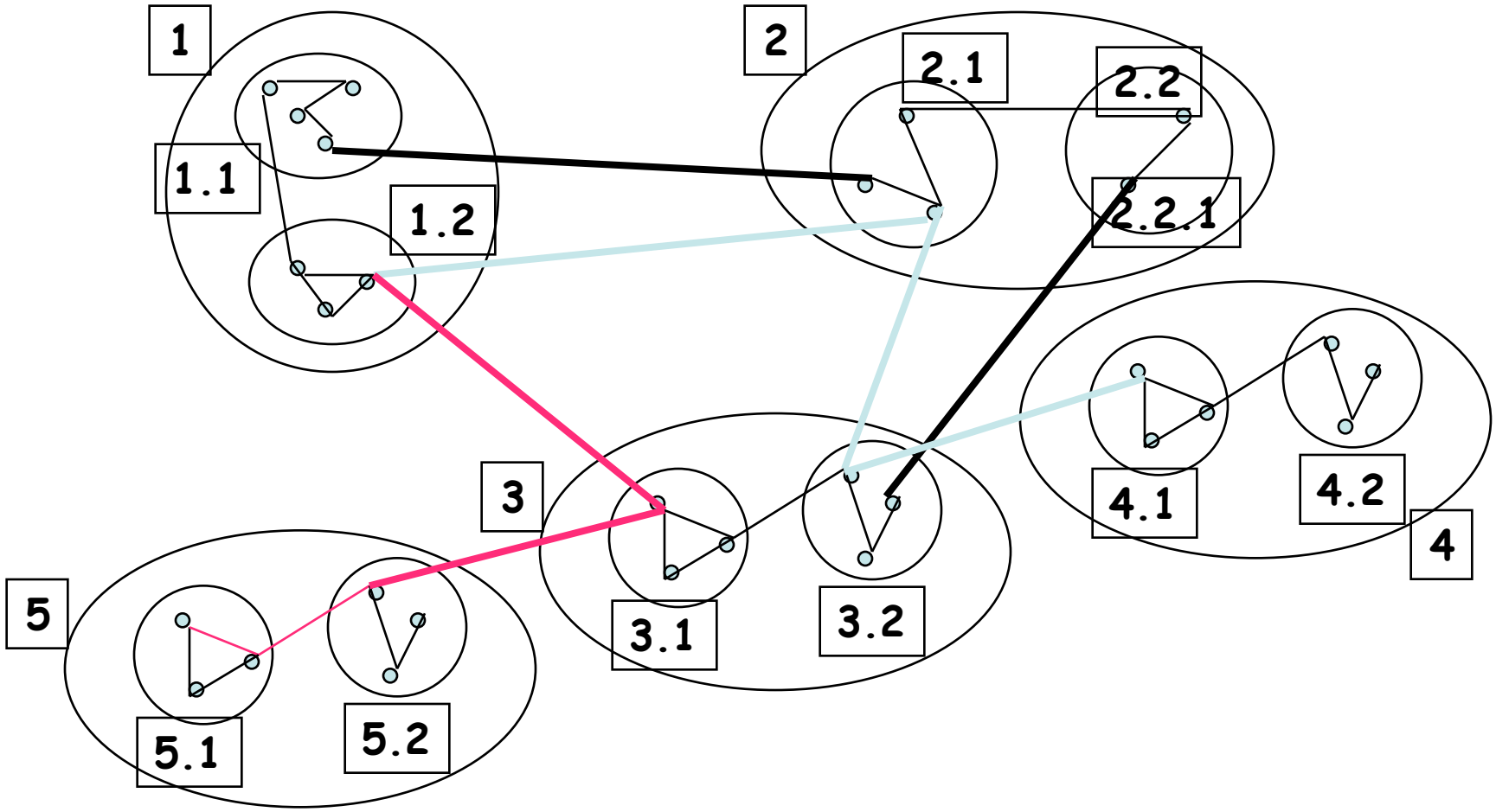

IPv6

- Initial motivation: 32-bit address space soon to be completely allocated.
- Additional motivation:
  - header format helps speed processing/ forwarding
  - header changes to facilitate QoS

  IPv6 datagram format:
  - fixed-length 40 byte header
  - no fragmentation allowed

IP datagram format

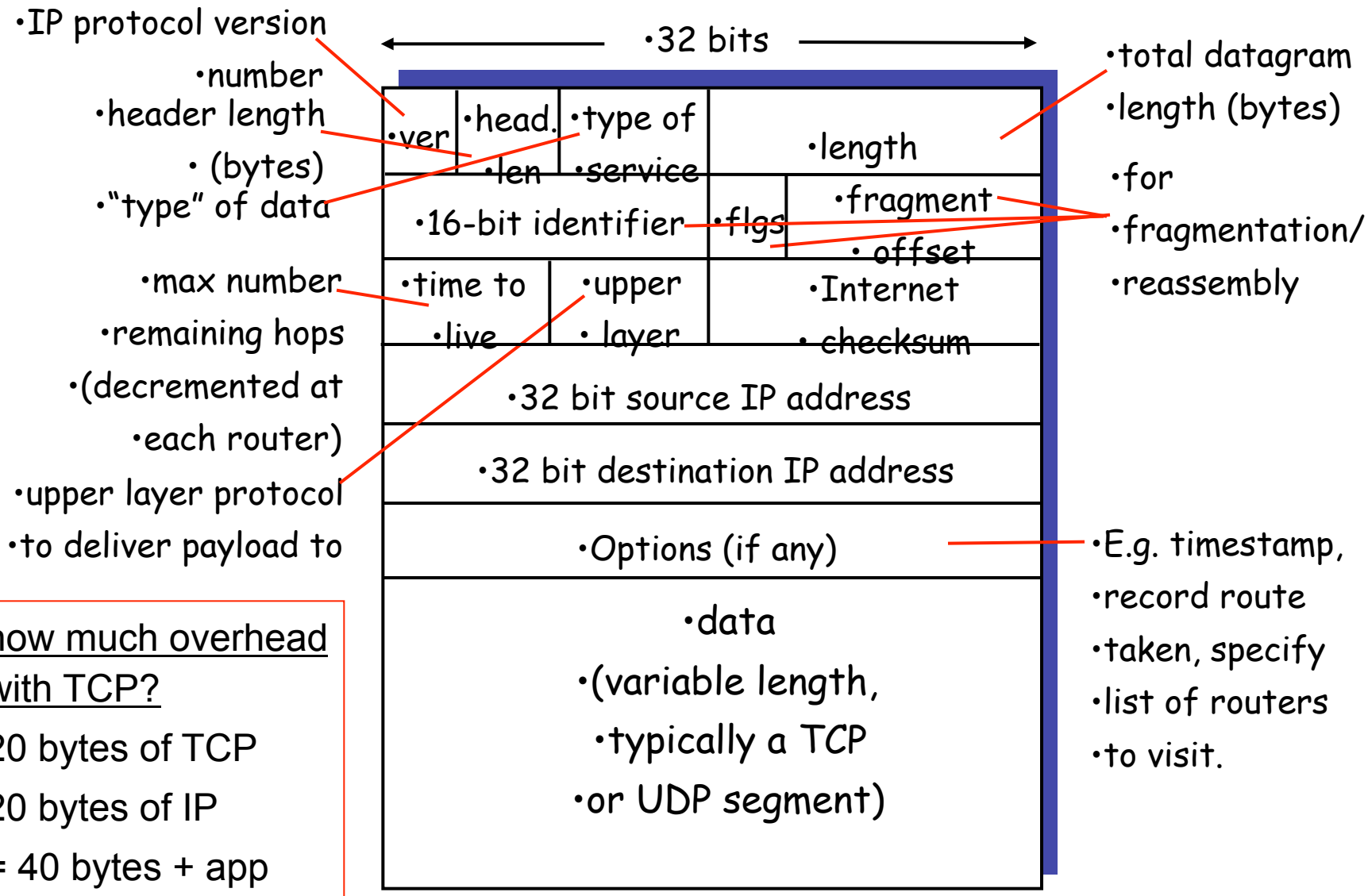

- how much overhead with TCP?
- 20 bytes of TCP
- 20 bytes of IP
- = 40 bytes + app layer overhead

IPv6 Header (Cont)

- *Priority:* identify priority among datagrams in flow
- *Flow Label:* identify datagrams in same "flow."
- (concept of"flow" not well defined).
- *Next header:* identify upper layer protocol for data

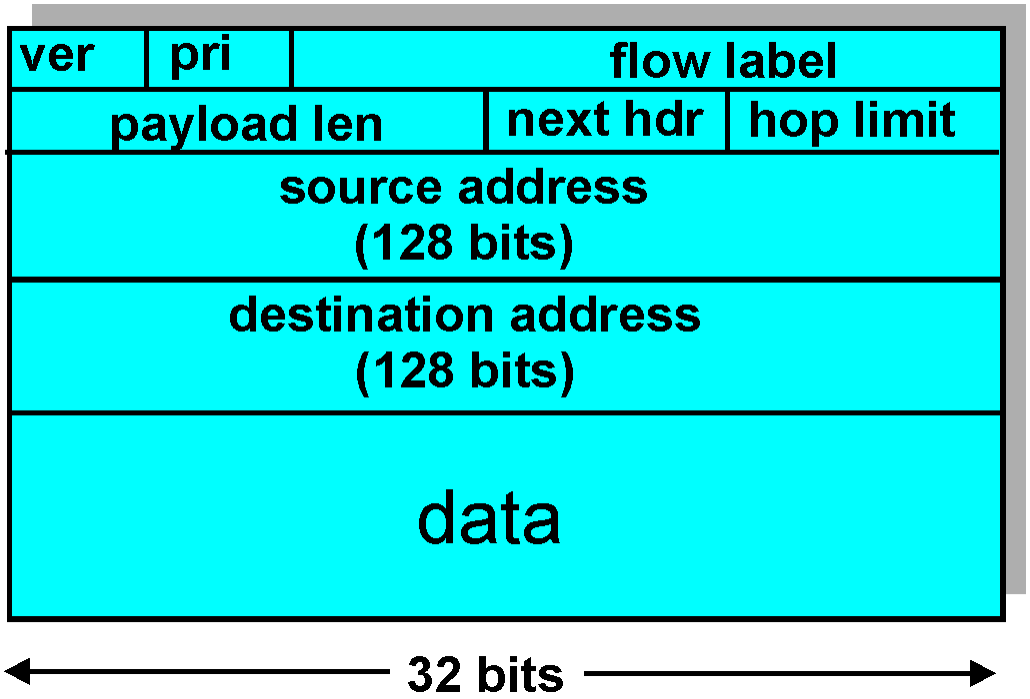

Other Changes from IPv4

- *Checksum*: removed entirely to reduce processing time at each hop
- *Options:* allowed, but outside of header, indicated by “Next Header” field
- *ICMPv6:* new version of ICMP
  - additional message types, e.g. “Packet Too Big”
  - multicast group management functions

Transition From IPv4 To IPv6

- Not all routers can be upgraded simultaneous
  - no “flag days”
  - How will the network operate with mixed IPv4 and IPv6 routers?
- *Tunneling:* IPv6 carried as payload in IPv4 datagram among IPv4 routers

Tunneling

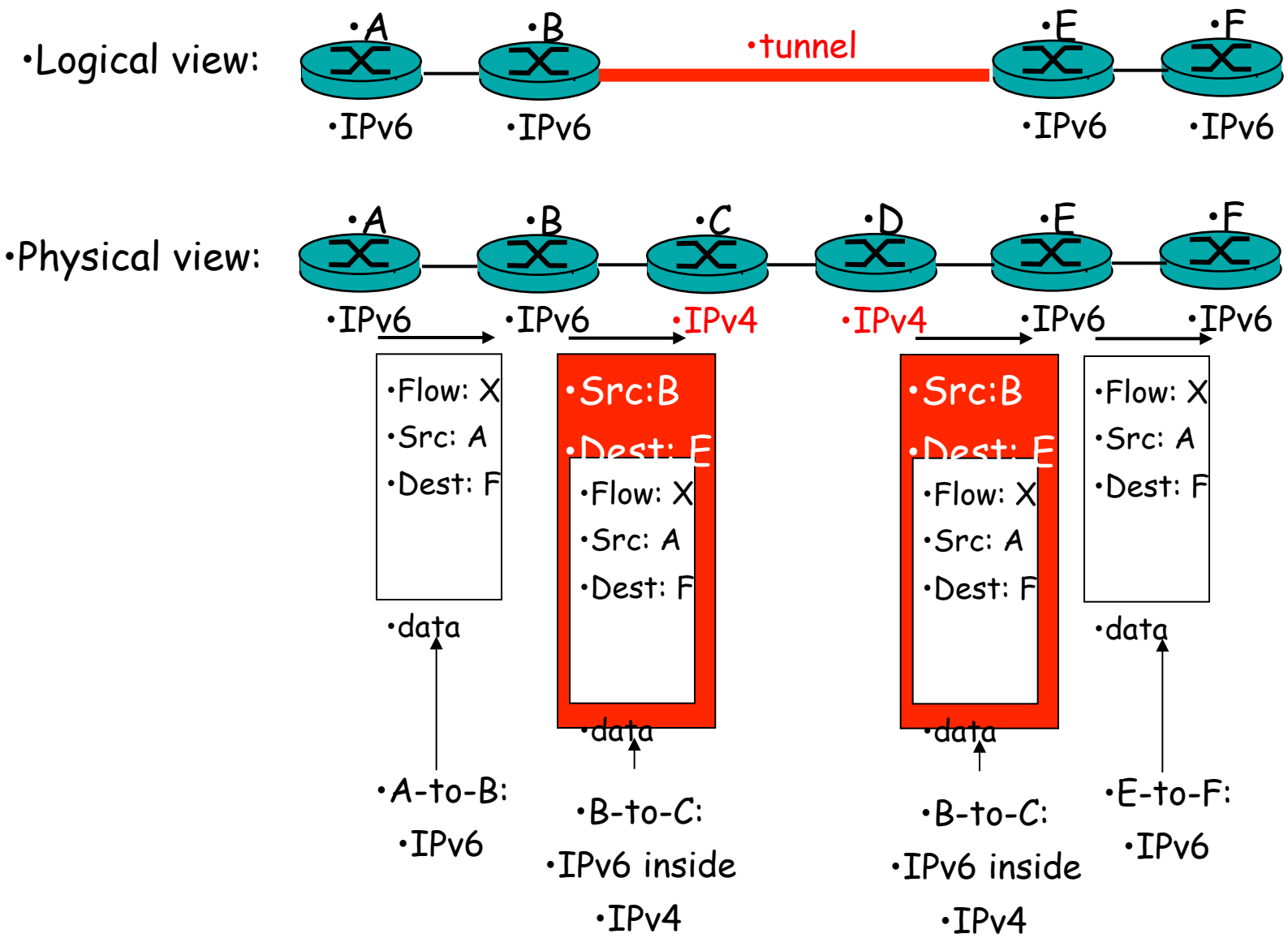
•Logical view:
•A
•B
•tunnel
•E
•F
•IPv6
•IPv6
•IPv6
•IPv6
•Physical view:
•A
•B
•C
•D
•E
•F
•IPv6
•IPv6
•IPv4
•IPv4
•IPv6
•IPv6
•Flow: X
•Src: A
•Dest: F
•data
•Src:B
•Dest: E
•Flow: X
•Src: A
•Dest: F
•data
•Src:B
•Dest: E
•Flow: X
•Src: A
•Dest: F
•data
•Flow: X
•Src: A
•Dest: F
•data
•A-to-B:
•IPv6
•B-to-C:
•IPv6 inside
•IPv4
•B-to-C:
•IPv6 inside
•IPv4
•E-to-F:
•IPv6

NAT: Network Address Translation

- Motivation: local network uses just one IP address as far as outside word is concerned:
  - no need to be allocated range of addresses from ISP: - just one IP address is used for all devices
  - can change addresses of devices in local network without notifying outside world
  - can change ISP without changing addresses of devices in local network
  - devices inside local net not explicitly addressable, visible by outside world (a security plus).

NAT: Network Address Translation

- 16-bit port-number field:
  - 60,000 simultaneous connections with a single LAN-side address!
- NAT is ***controversial*** (books term):
  - NAT is ***evil*** (protocol designer and security term)
  - routers should only process up to layer 3
  - violates end-to-end argument
    - NAT possibility must be taken into account by app designers, eg, P2P applications
  - address shortage should instead be solved by IPv6

NAT: Network Address Translation

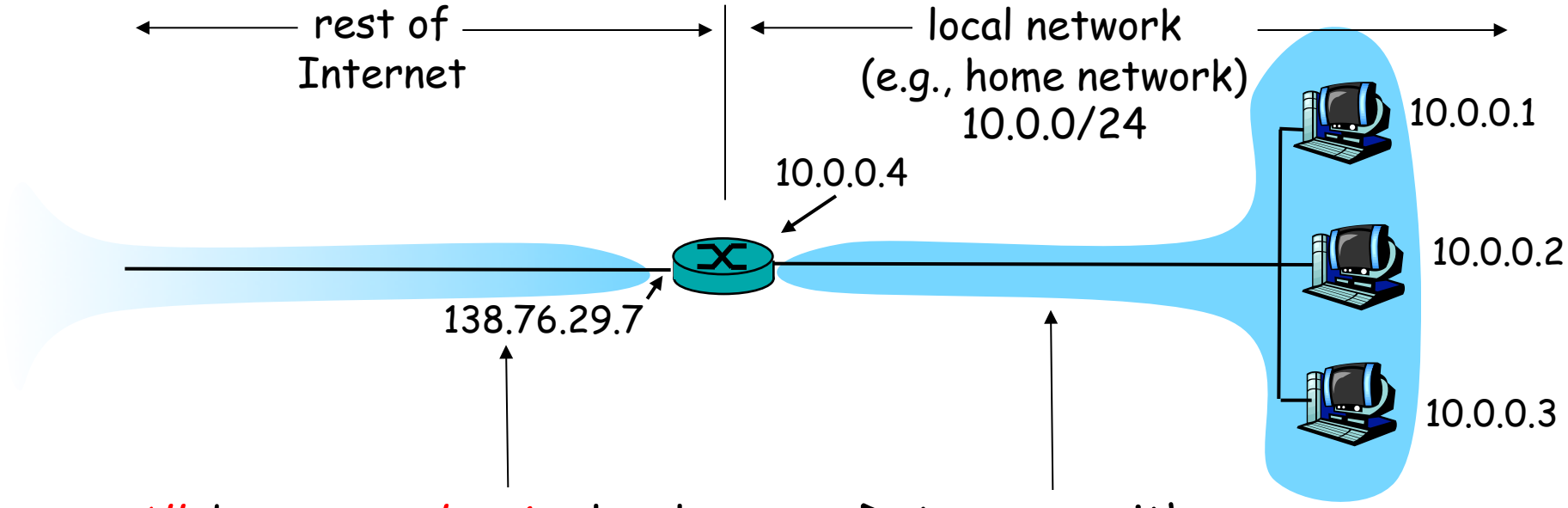

All datagrams *leaving* local network have same single source NAT IP address: 138.76.29.7, different source port numbers

Datagrams with source or destination in this network have 10.0.0/24 address for source, destination (as usual)

NAT: Network Address Translation

Implementation: NAT router must:

- *outgoing datagrams: replace* (source IP address, port #) of every outgoing datagram to (NAT IP address, new port #)
  . . . remote clients/servers will respond using (NAT IP address, new port #) as destination addr.
- *remember (in NAT translation table)* every (source IP address, port #) to (NAT IP address, new port #) translation pair
- *incoming datagrams: replace* (NAT IP address, new port #) in dest fields of every incoming datagram with corresponding (source IP address, port #) stored in NAT table

NAT: Network Address Translation

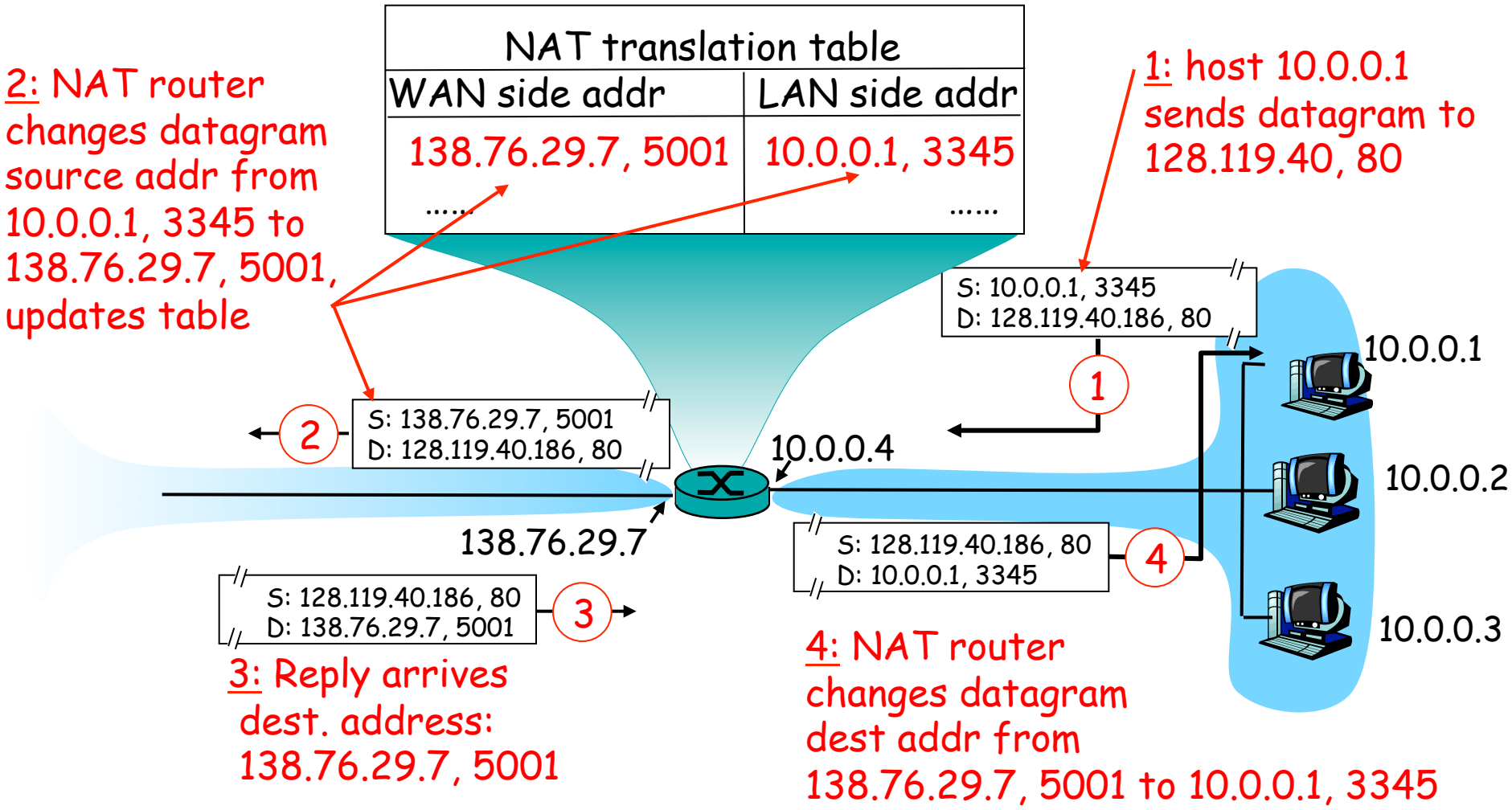

What's Next

- Read Chapter 1, 2, 3, and 4.1-4.3
- Next Lecture Topics from Chapter 5.1 and 5.2
  - UDP and TCP
- Homework
  - Due ***Thursday*** in lecture
- Project 3
  - Will be posted this week