What is internet protocol stack? What are the tasks of each stack index?

Different layers designed for communication in internet is modeled as a stack which is called the internet protocol stack.

- application: supporting network applications
  - FTP, SMTP, STTP
- transport: host-host data transfer
  - TCP, UDP
- network: routing of datagrams from source to destination
  - IP, routing protocols
- link: data transfer between neighboring network elements
  - PPP, Ethernet
- physical: bits "on the wire"

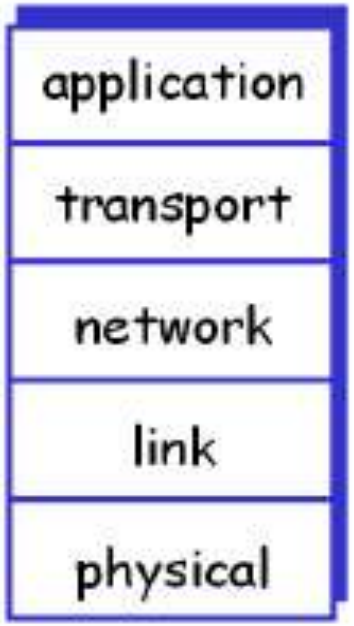

Define Repeaters, Hubs, Bridges, Switches, Routers, and Gateways.

These devices operate in different layers, as illustrated in the following figure.

Application layer	Application gateway
Transport layer	Transport gateway
Network layer	Router
Data link layer	Bridge, switch
Physical layer	Repeater, hub

If any device works with data within packet header i.e. IP addresses, we call the device as the device of network layer.

If any device can make decision depending on the address of frame header field, we call the device as the device of data link layer.

If any networking device can't distinguish bits, we call the device as the device of physical layer.

 # Repeaters:

These are analog devices that are connected to two cable segments. A signal appearing on one of them is amplified and put out on the other. Repeaters do not understand frames, packets, or headers. They understand volts.

Hubs:

A hub has a number of input lines that it joins electrically. Frames arriving on any of the lines are sent out on all the others. If two frames arrive at the same time, they will collide. The entire hub forms a single collision domain. All the lines coming into a hub must operate at the same speed.

Hubs are of two types- active and passive. Active hubs need extra power supply while passive hubs do not need extra power supply.

Bridges:

A bridge connects two or more LANs. When a frame arrives, software in the bridge extracts the destination address from the frame header and looks it up in a table to see where to send the frame.

Switches:

Switches are similar to bridges in that both route on frame addresses. The main difference is that a switch is most often used to connect individual computers. In the following figure, when host A wants to send a frame to host B, the bridge gets the frame

but just discards it. In contrast, the switch must actively forward the frame from A to B because there is no other way for the frame to get there. Since each switch port usually goes to a single computer, switches must have space for many more line cards than do bridges intended to connect only LANs.

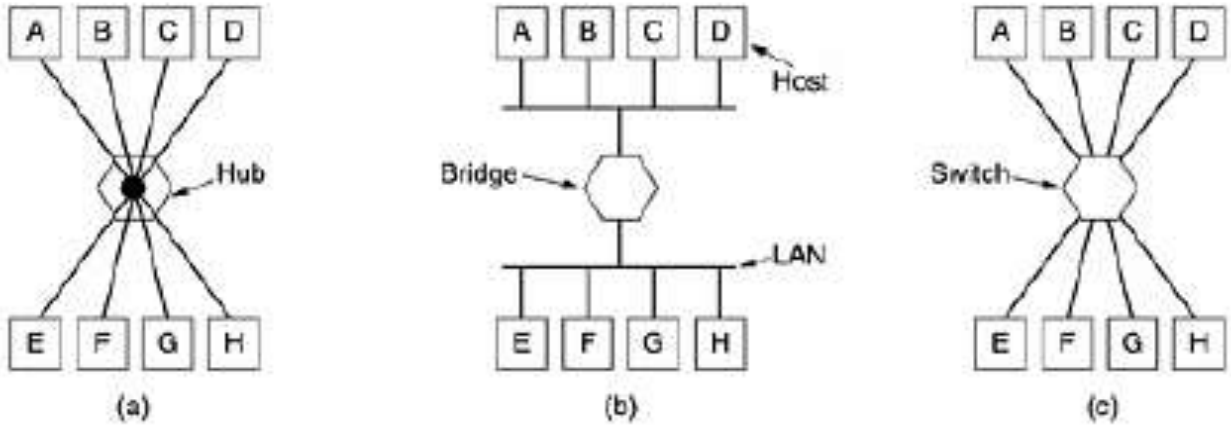

Routers:

Router is the device that connects different networks of different formats. The task of router is to decide path for received packets. When a packet comes into a router, the frame header and trailer are stripped off and the packet located in the frame's payload field is passed to the routing software. This software uses the packet header to choose an output line. The routing software does not see the frame addresses and does not even know whether the packet came in on a LAN or a point-to-point line.

Gateways:

Gateways are devices that connect two computers that use different connection-oriented transport protocols. For example, suppose a computer using the connection-oriented TCP/IP protocol needs to talk to a computer using the connection-oriented ATM transport protocol. The transport gateway can copy the packets from one connection to the other, reformatting them as need be. Finally, application gateways understand the format and contents of the data and translate messages from one format to another. An e-mail gateway could translate Internet messages into SMS messages for mobile phones, for example.

Differentiate between Hubs and Repeaters.

- Hubs do not amplify signals like repeaters do.
- Repeaters have only two lines (input and output) while a Hub has many.
- Like repeaters, hubs do not examine the 802 addresses.

Differentiate between Hubs and Switches.

- Hubs cannot lessen the size of collision domain rather increases it. But switches can reduce the size of collision domain.
- Hub requires Half-duplex communication while Switch requires Full-duplex communication.

Differentiate between Hubs and Bridges.

- Bridges can connect two or more LANs but Hubs connect several hosts directly.
- Bridges are Data Link Layer's devices but Hubs are Physical Layer devices.

Differentiate between Bridges and Router.

- Routers are used to connect different networks of different architectures but in case of Bridges, different architectures cannot be used.
- Bridges are Data Link Layer's devices but Routers are Network Layer's devices.

Differentiate between Bridges and Switches.

- Number of ports in Switch is more as compared to Bridge.
- Bridges can connect two or more LANs but Switches connect several hosts directly.

What do you mean by Collision Domain? How does a switch reduces the size of the collision domain while a hub increases it?

 # Collision Domain:

A collision domain is a physical network segment where data packets can "collide" with one another for being sent on a shared medium, in particular in the Ethernet networking protocol.

A Hub usually sends the packet to all the hosts connected to it when it receives a packet. The hosts that do not require that particular packet discard the packet while the hosts that need that packet accept it. Thus, connecting N hosts by a hub will make a collision domain of size N. In contrast, a switch can read the MAC address of a packet and can thus understand to which host a packet needs to be sent. The switch then sends the packet to that particular hosts and thus reduces the collision domain.

INTELLIGENT HUB

A hub that is enabled for remote monitoring and management through Simple Network Management Protocol (SNMP). An intelligent hub contains Management Information Base (MIB) information that specifies which conditions can be monitored and which functions can be managed. These functions can include the following:

- Setting alerts on problem conditions such as excessive collisions
- Isolating and disconnecting problem computers
- Providing network statistics to remote management consoles

Intelligent hubs are usually managed using in-band signaling methods, but they usually offer out-of-band management functions as well, such as being managed by a remote Telnet connection. Some stackable hubs have separate SNMP modules that you can purchase and install to provide manageability.

A common connection point for devices in a network. Hubs are commonly used to connect segments of a LAN. A hub contains multiple ports. When apacketarrives at one port, it is copied to the other ports so that all segments of the LAN can see all packets.

A *passive hub* serves simply as a conduit for the data, enabling it to go from one device (or segment) to another. So-called *intelligent hubs* include additional features that enables an administrator to monitor the traffic passing through the hub and to configure each port in the hub. Intelligent hubs are also called *manageable hubs.*