Internet Control Message Protocol

- ICMP author -- J. Postel, September 1981.

- The purpose of ICMP is to provide:
  - control;
  - troubleshooting;
  - error messages.

- Applications based on ICMP (ping, traceroute, MTU determination).

ICMP and OSI RM

	APPLICATION	Layer 7
	PRESENTATION	Layer 6
	SESSION	Layer 5
TCP	TRANSPORT	Layer 4
ICMP - IP	NETWORK	Layer 3
	DATA LINK	Layer 2
Physical	PHYSICAL	Layer 1
TCP/IP		OSI/RM

IP datagram + ICMP format

IPv4	Length	Type of Service	Total Length	
Identification			Flags DF	Fragment Offset
Time to Live		Protocol ICMP=1	Header Checksum	
Source Address				
Destination Address				

ICMP header + message

Type	Code	Checksum
Content depends on type and code		

ICMP is encapsulated within IP.

Types of ICMP messages

The ICMP messages are indicated by the Type Field value:

- 0 - Echo Reply
- 3 - Destination unreachable
- 4 - Source Quench
- 5 - Redirect
- 8 - Echo
- 11 - Time exceeded
- 12 - Parameter problem
- 13 - Timestamp
- 14 - Timestamp reply
- 17 - Address mask request
- 18 - Address mask reply

Types of ICMP messages

Echo and Echo Reply

Type (Request=8, Reply=0)	Code=0	Checksum
Identifier (like in TCP and UDP)		Sequence number (like in TCP and UDP)
Data (returned)		

Destination Unreachable

Type=3	Code=. . .	Checksum
unused		
Internet Header + 64 bits of Original Data Datagram		

DU is sent by a router (gateway) when the destination network is unreachable, or if the IP datagram Don't Fragment flag is set on
or a host (the service (port or protocol) is not currently active).

Code Field

- **0 = net unreachable**
- **1 = host unreachable**
- **2 = protocol unreachable**
- **3 = port unreachable**
- **4 = fragmentation needed and DF set**
- **5 = source route failed**

Types of ICMP messages

Source Quench

Type=4	Code=0	Checksum
unused		
Internet Header + 64 bits of Original Data Datagram		

If a router does not have enough buffer space or is approaching its capacity it may send a Source Quench message to the datagram source host. The source quench message is a request to the host to cut back the rate at which it is sending traffic (to the Internet destination).

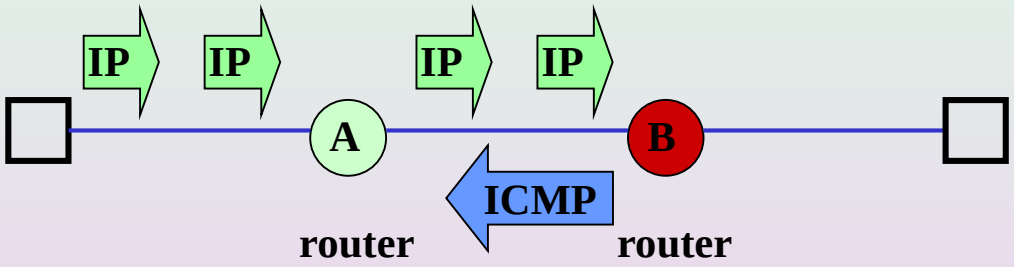

Types of ICMP messages

Time Exceeded

Type=11	Code=. . .	Checksum
unused		
Internet Header + 64 bits of Original Data Datagram		

Code Field

- 0 = time to live exceeded in transitions
- 1 = fragment reassembly time exceeded

Parameters Problem

Type=12	Code=0	Checksum
Pointer	unused	
Internet Header + 64 bits of Original Data Datagram		

If a router or host finds a problem with an IP header, it must discard the datagram. The source host may be notified by being sent a Parameter Problem message. The Pointer identifies the octet of the original datagram's header where the error was detected.

Types of ICMP messages

Redirect Message

Type=5	Code=. . .	Checksum
Gateway Internet Address		
Internet Header + 64 bits of Original Data Datagram		

If a router (Router A) receives a datagram to forward from a host on the same network, the router (Router A) checks its routing table, and finds out that the shortest path is via another router (Router B) on the same network. Router A sends a Redirect message to the host with the IP address of Router B. Code Field show where to redirect the datagram - to host, network or/and type of service.

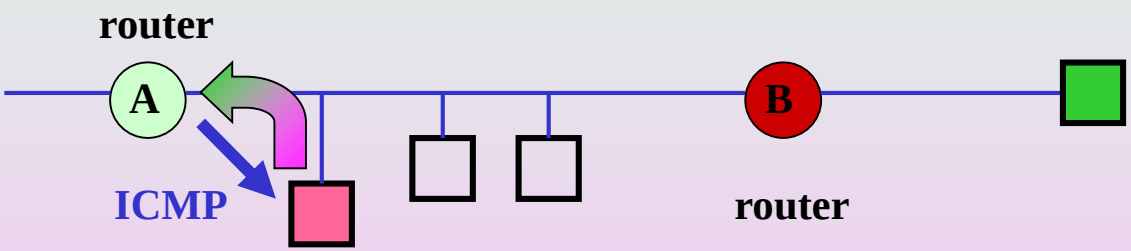

Types of ICMP messages

Timestamp messages

Type (Request=13, Reply=14)	Code=0	Checksum
Identifier		Sequence number
Originate timestamp		
Receive Timestamp		
Transmit timestamp		

The Timestamp messages are best known as part of the traceroute (tracert in Windows) programs. The purpose is to measure the round trip time it takes to go from a source to a destination host.
Any timestamp (originate, receive, transmit) is measured in milliseconds since midnight Universal time (UT). Receive and transmit marks are filled by receiver.

Types of ICMP messages

Address Mask

Type (Request=17, Reply=18)	Code=0	Checksum
Identifier		Sequence number
Address mask		

The Address Mask Request is used by a host to determine what its address mask is on a network. The Address Mask Reply message is the reply from a router (or a host) to the source host with the correct address mask for the network.
The Address Mask field contains the 32-bit subnet mask for the network (e.g. 255.255.255.0).

ICMP-based applications

Ping (whether host is alive)

- If a system receives the Echo Request packet (Type 8), it should send back the Echo reply packet (Type 0).
- Ping filtration.
- Other ways to implement Ping procedure:
  - Echo service (TCP and UDP ports #7). A server listens for TCP connections on TCP port #7 or for incoming datagram on UDP port #7. Then all the data received is sent back. This continues until the calling user terminates the connection (in case of TCP connection).
  - Timing an SNMP query.
  - Timing a TCP connect attempt.

ICMP-based applications

Traceroute (tracert/ path from source to dest

- Send 3 UDP packets with TTL=1 towards the desired destination.
  - The first system on their way sees the expired TTL, and sends back three ICMP message type 11 (Time Exceeded), message code 0 (Time-To-Live Exceeded in Transit) packets to the originating system.
- Another 3 packets to the same destination with TTL=2.
  - Another 3 ICMP Time Exceeded Replies.
- . . . .
  - Until the answer from destination system.

RESULT - walkthrough the Net.

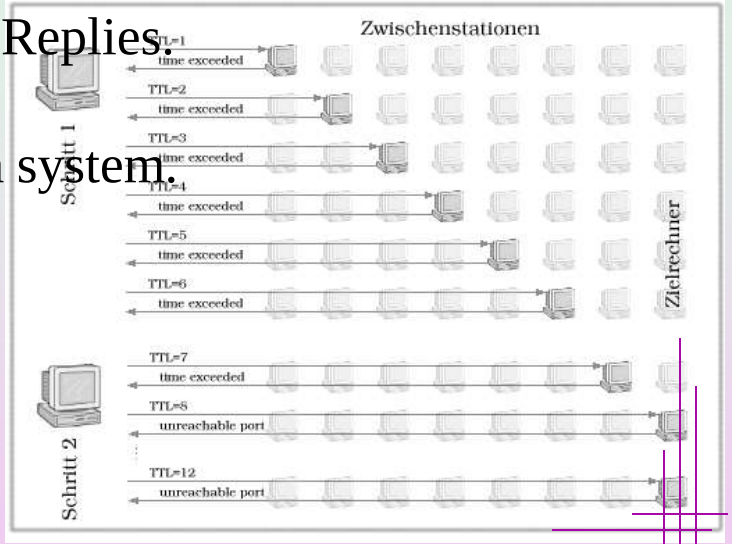

ICMP-based applications

Path MTU determination

One machine sends the biggest packet it can with the DF Flag (Don't Fragment) bit set in Flags field in IP headers. With the DF bit set, this packet will not be broken up into smaller packets. It has to be transmitted at its current size or not at all. If any system along the path has a smaller MTU, it will drop the packet with the DF bit set, and send an ICMP error message back to the origin system saying that it couldn't send packets that big, but DF was set so it couldn't fragment it.

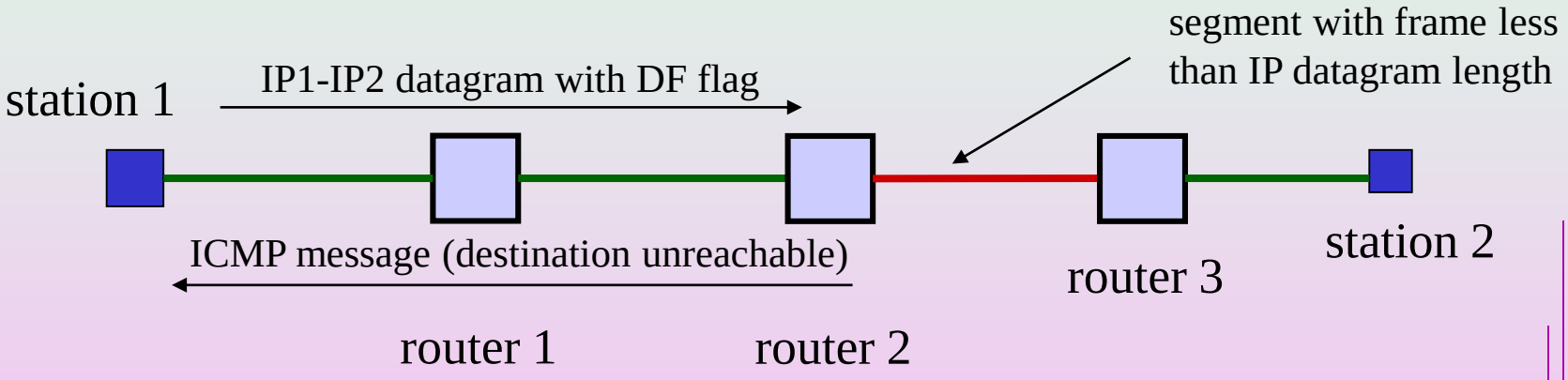

ICMP-based applications

Various MTU values

データリンクによってMTUが違う

MTUが異なる場合には、ルーターでパケットの分割と再構築が必要になる。

データリンク	MTU	Total Length
IPv4最大MTU(RFC791)	65535	–
IPv4最小PTMU(RFC1191)	576	–
IPv4最小MTU(RFC791)	68	–
IP over ATM	9180	–
FDDI	4352	4500
Ethernet	1500	1518
PPP (標準)	1500	–
IEEE 802.3 Ethernet	1492	1518
PPPoE(RFC2516)	1492	
PPPoE(フレッツ)	1454	
IPv6最小MTU(RFC2460)	1280	–

YAMAHA

©AV&IT Business Group

http://rfc.netvolante.jp/rfc/rfc1191.txt (Path MTU Discovery)

Future of ICMP

ICMPv6

ICMPv6 is included in IPv6 structure.