LAN switching and Bridges

Relates to Lab 6.
Covers interconnection devices (at different layers) and the difference between LAN switching (bridging) and routing. Then discusses LAN switching, including learning bridge algorithm, transparent bridging, and the spanning tree protocol.

1

Outline

- Interconnection devices
- Bridges/LAN switches vs. Routers
- Bridges
- Learning Bridges
- Transparent bridges

2

Introduction

- There are many different devices for interconnecting networks

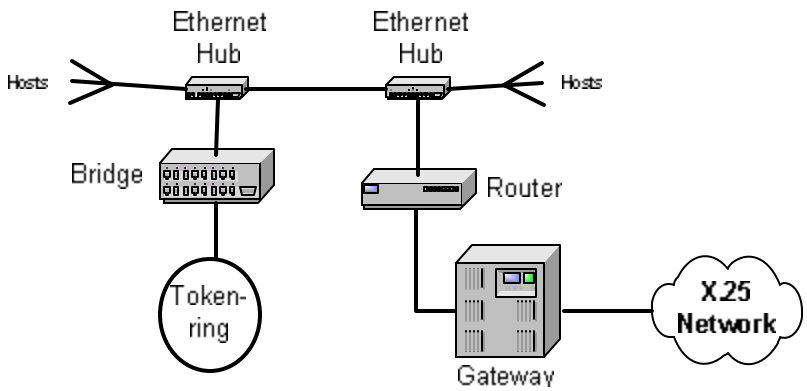

3

Ethernet Hub

- Used to connect hosts to Ethernet LAN and to connect multiple Ethernet LANs
- Collisions are propagated

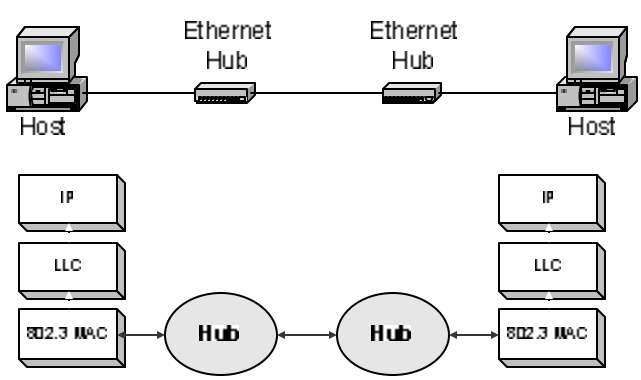

4

Bridges/LAN switches

- We will use the terms bridge and LAN switch (or Ethernet switch in the context of Ethernet) interchangeably. Interconnect multiple LAN, possibly with different type
- Bridges operate at the Data Link Layer (Layer 2)

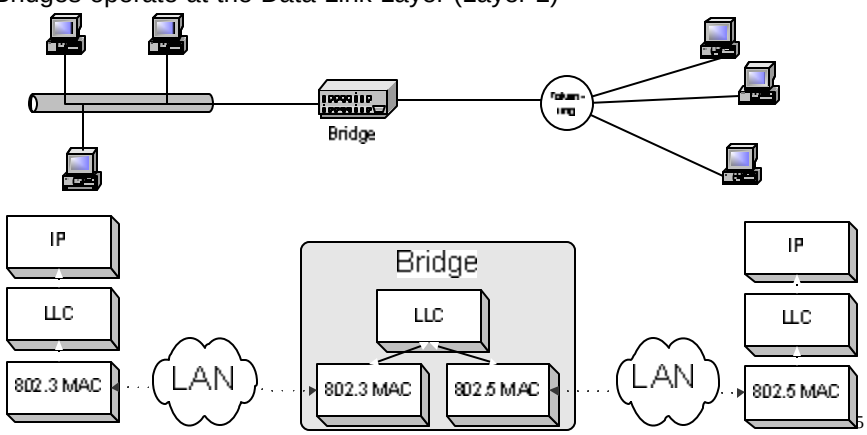

Ethernet Hubs vs. Ethernet Switches

- An **Ethernet switch** is a packet switch for Ethernet frames
  - Buffering of frames prevents collisions.
  - Each port is isolated and builds its own collision domain
- An **Ethernet Hub** does not perform buffering:
  - Collisions occur if two frames arrive at the same time.

Hub

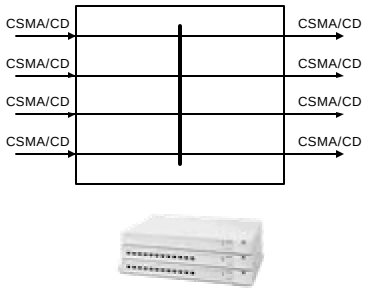

Switch

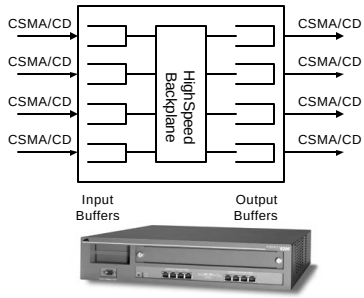

Dual Speed Ethernet hub

- Dual-speed hubs operate at 10 Mbps and 100 Mbps per second
- Conceptually these hubs operate like two Ethernet hubs separated by a bridge

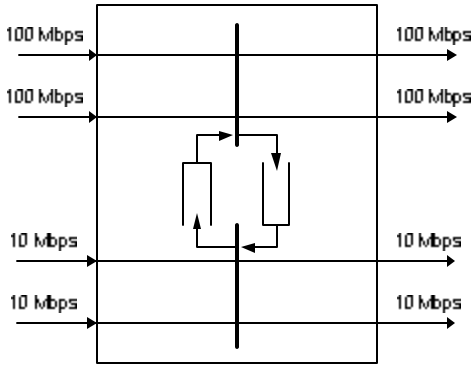

Dual-Speed Ethernet Hub

Routers

- Routers operate at the Network Layer (Layer 3)
- Interconnect IP networks

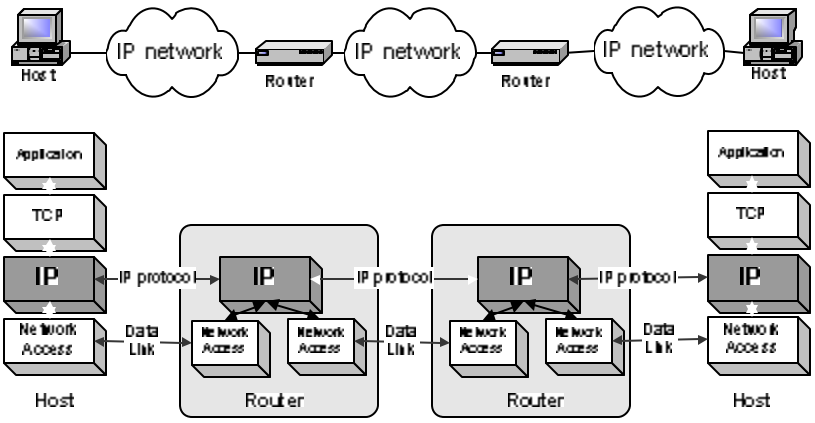

Gateways

- The term “Gateway” is used with different meanings in different contexts
- “Gateway” is a generic term for routers (Level 3)
- “Gateway” is also used for a device that interconnects different Layer 3 networks and which performs translation of protocols (“Multi-protocol router”)

9

Bridges versus Routers

- An enterprise network (e.g., university network) with a large number of local area networks (LANs) can use routers or bridges
  - 1980s: LANs interconnection via bridges
  - Late 1980s and early 1990s: increasingly use of routers
  - Since mid1990s: LAN switches replace most routers

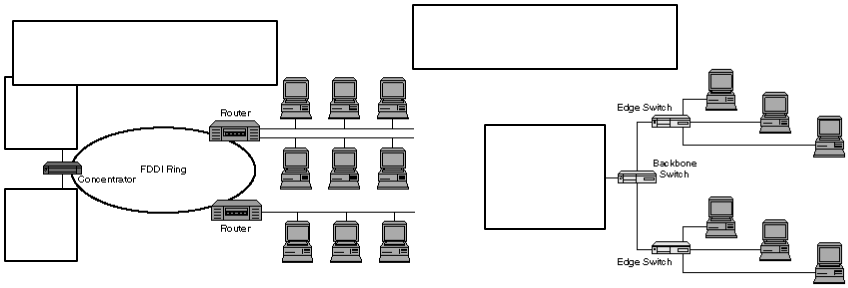

10

A Routed Enterprise Network

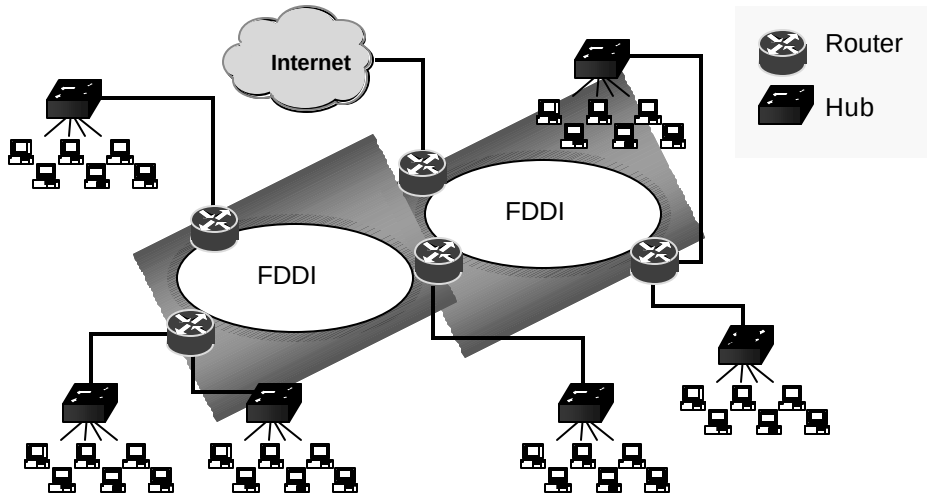

11

A Switched Enterprise Network

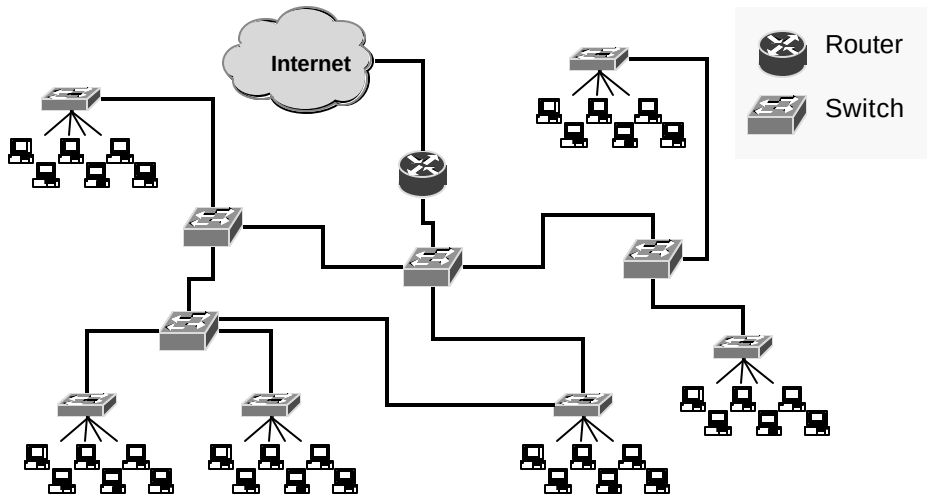

12

Example: Univ. of Virginia CS Department Network

- Design of the network architecture (Spring 2000)
- There is no router !

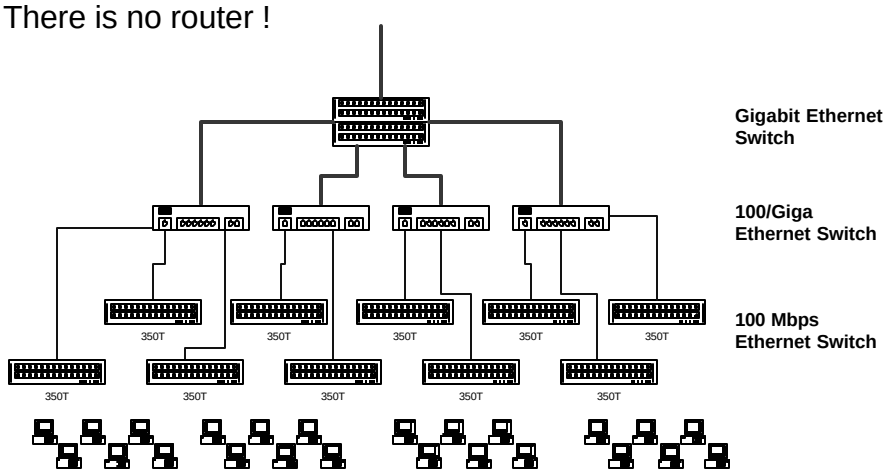

13

Bridges versus Routers

Routers	Bridges
• Each host's IP address must be configured	• MAC addresses are hardwired
• If network is reconfigured, IP addresses may need to be reassigned	• No network configuration needed
• Routing done via RIP or OSPF	• No routing protocol needed (sort of) – **learning bridge algorithm** – **spanning tree algorithm**
• Each router manipulates packet header (e.g., reduces TTL field)	• Bridges do not manipulate frames

14

Need for Routing

- What do bridges do if some LANs are reachable only in multiple hops ?
- What do bridges do if the path between two LANs is not unique ?

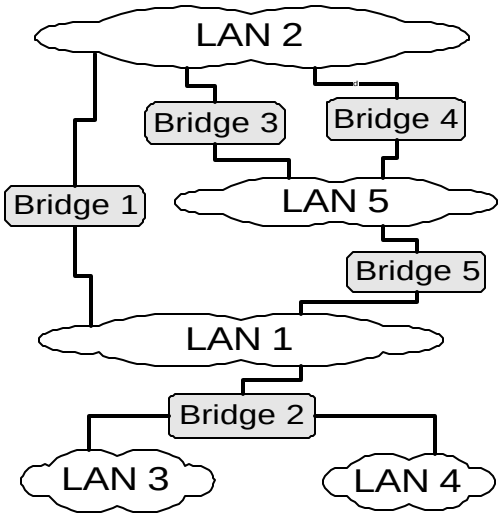

Transparent Bridges

- Three principal approaches can be found:
  - **Fixed Routing**
  - **Source Routing**
  - **Spanning Tree Routing** (IEEE 802.1d)
- We only discuss the last one in detail.
- Bridges that execute the spanning tree algorithm are called **transparent bridges**

Transparent Bridges

Overall design goal: **Complete transparency**

"Plug-and-play"

Self-configuring without hardware or software changes

Bridges should not impact operation of existing LANs

Three parts to transparent bridges:

(1) Forwarding of Frames

(2) Learning of Addresses

(3) Spanning Tree Algorithm

17

(1) Frame Forwarding

- Each bridge maintains a **forwarding database** with entries
  < MAC address, port, age>

MAC address:	host name or group address
port:	port number of bridge
age:	aging time of entry

with interpretation:

- a machine with **`MAC address`** lies in direction of the **`port`** number from the bridge. The entry is **`age`** time units old.

18

(1) Frame Forwarding

- Assume a MAC frame arrives on port x.

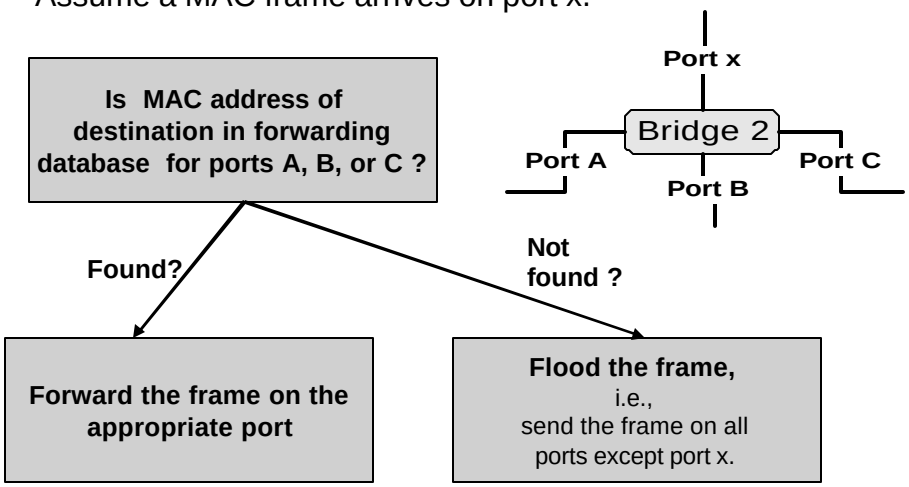

(2) Address Learning (Learning Bridges)

- Routing tables entries are set automatically with a simple heuristic:

  The source field of a frame that arrives on a port tells which hosts are reachable from this port.

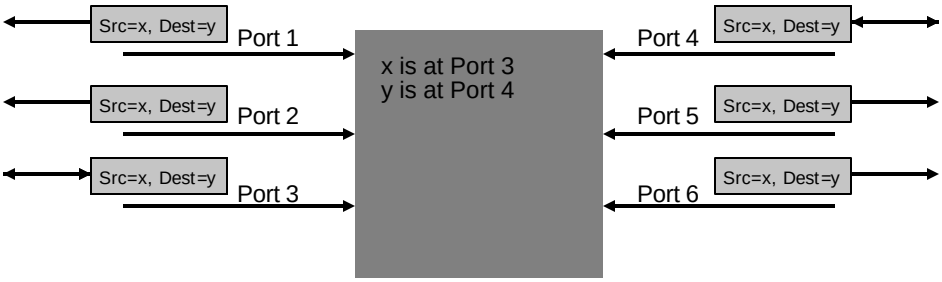

(2) Address Learning (Learning Bridges)

Algorithm:

- For each frame received, the source stores the source field in the forwarding database together with the port where the frame was received.
- All entries are deleted after some time (default is 15 seconds).

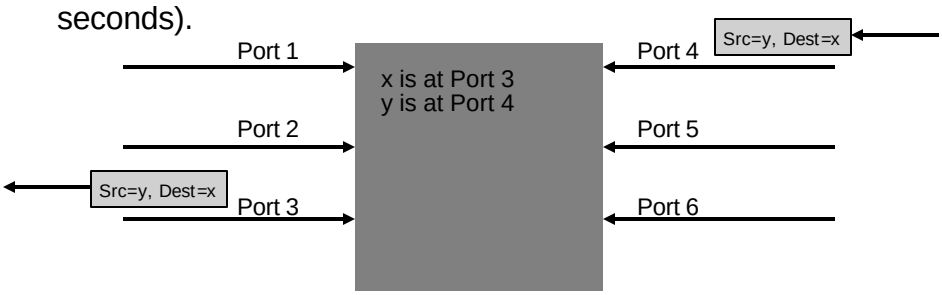

21

Example

•Consider the following packets:
(Src=A, Dest=F), (Src=C, Dest=A), (Src=E, Dest=C)

•What have the bridges learned?

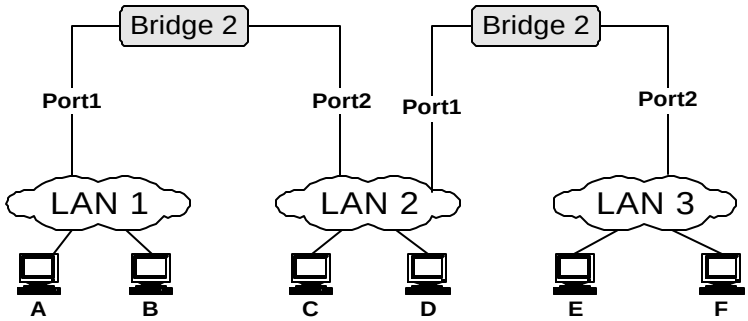

22

Danger of Loops

- Consider the two LANs that are connected by two bridges.
- Assume *host n* is transmitting a frame F with unknown destination.

What is happening?

- Bridges A and B flood the frame to LAN 2.
- Bridge B sees F on LAN 2 (with unknown destination), and copies the frame back to LAN 1
- Bridge A does the same.
- The copying continues

Where's the problem? What's the solution ?

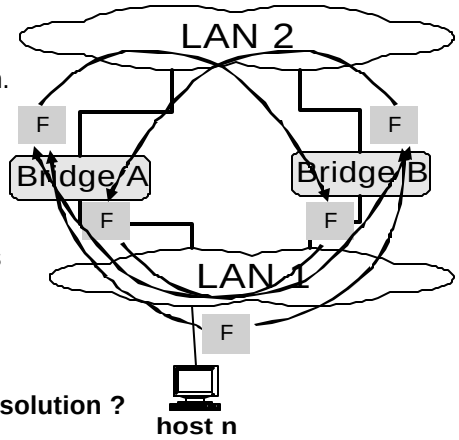

23

Spanning Trees / Transparent Bridges

- A solution is to prevent loops in the topology
- IEEE 802.1d has an algorithm that organizes the bridges as spanning tree in a dynamic environment
  - Note: Trees don't have loops
- Bridges that run 802.1d are called transparent bridges
- Bridges exchange messages to configure the bridge (Configuration Bridge Protocol Data Unit, Configuration BPDUs) to build the tree.

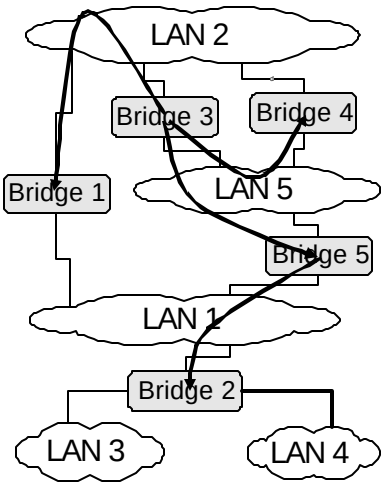

24

Configuration BPDUs

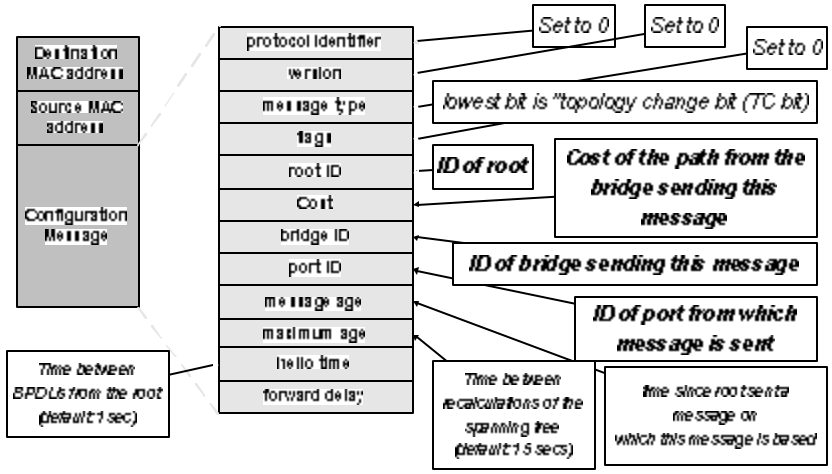

25

What do the BPDUs do?

With the help of the BPDUs, bridges can:

- Elect a single bridge as the **root bridge**.
- Calculate the distance of the shortest path to the root bridge
- Each LAN can determine a **designated bridge**, which is the bridge closest to the root. The designated bridge will forward packets towards the root bridge.
- Each bridge can determine a **root port**, the port that gives the best path to the root.
- Select ports to be included in the spanning tree.

26

Concepts

- Each bridge as a unique identifier: Bridge ID

  Bridge ID = { Priority : 2 bytes;
  Bridge MAC address: 6 bytes}
  - Priority is configured
  - Bridge MAC address is lowest MAC addresses of all ports

- Each port within a bridge has a unique identifier (port ID).

- **Root Bridge:** The bridge with the lowest identifier is the root of the spanning tree.
- **Root Port**: Each bridge has a root port which identifies the next hop from a bridge to the root.

27

Concepts

- **Root Path Cost**: For each bridge, the cost of the min-cost path to the root.

  Assume it is measured in #hops to the root
- **Designated Bridge, Designated Port:** Single bridge on a LAN that provides the minimal cost path to the root for this LAN:
  - if two bridges have the same cost, select the one with highest priority
  - if the min-cost bridge has two or more ports on the LAN, select the port with the lowest identifier

- **Note:** We assume that “cost” of a path is the number of “hops”.

28

Steps of Spanning Tree Algorithm

- Each bridge is sending out BPDUs that contain the following information:

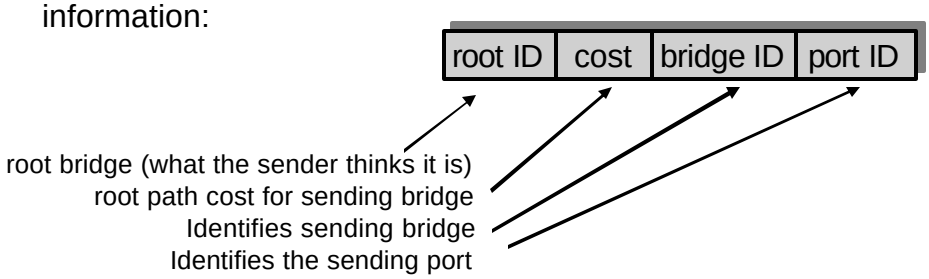

- The transmission of BPDUs results in the distributed computation of a spanning tree
- The convergence of the algorithm is very quick

29

Ordering of Messages

- We define an ordering of BPDU messages

M1 **M2**

We say M1 **advertises a better path** than M2 ("**M1<<M2**") if
(R1 < R2),
Or (R1 == R2) and (C1 < C2),
Or (R1 == R2) and (C1 == C2) and (B1 < B2),
Or (R1 == R2) and (C1 == C2) and (B1 == B2) and (P1 < P2)

30

Initializing the Spanning Tree Protocol

- Initially, all bridges assume they are the root bridge.
- Each bridge B sends BPDUs of this form on its LANs from each port P:

B	0	B	P

- Each bridge looks at the BPDUs received on all its ports and its own transmitted BPDUs.
- Root bridge is the smallest received root ID that has been received so far (Whenever a smaller ID arrives, the root is updated)

31

Operations of Spanning Tree Protocol

- Each bridge B looks on all its ports for BPDUs that are better than its own BPDUs
- Suppose a bridge with BPDU:

M1

R1	C1	B1	P1

receives a “better” BPDU:

M2

R2	C2	B2	P2

Then it will update the BPDU to:

R2	C2+1	B1	P1

- However, the new BPDU is not necessarily sent out
- On each bridge, the port where the “best BPDU” (via relation “**<<**“) was received is the **root port of the bridge**.

32

When to send a BPDU

- Say, B has generated a BPDU for each port x

R	Cost	B	x

- B will send this BPDU on port x only if its BPDU is better (via relation "**<<**") than any BPDU that B received from port x.

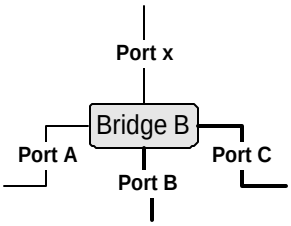

- In this case, B also assumes that it is the **designated bridge** for the LAN to which the port connects
- And port x is the **designated port** of that LAN

33

Selecting the Ports for the Spanning Tree

- Each bridges makes a local decision which of its ports are part of the spanning tree
- Now **B can decide which ports are in the spanning tree:**
  - B's root port is part of the spanning tree
  - All designated ports are part of the spanning tree
  - All other ports are not part of the spanning tree
- B's ports that are in the spanning tree will forward packets (=forwarding state)
- B's ports that are not in the spanning tree will not forward packets (=blocking state)

34

Building the Spanning Tree

- Consider the network on the right.
- Assume that the bridges have calculated the designated ports (D) and the root ports (P) as indicated.

- What is the spanning tree?
  - On each LAN, connect R ports to the D ports on this LAN

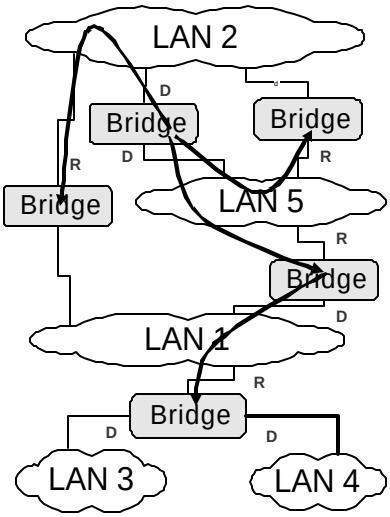

35

Example

- Assume that all bridges send out their BPDU's once per second, and assume that all bridges send their BPDUs at the same time
- Assume that all bridges are turned on simultaneously at time T=0 sec.

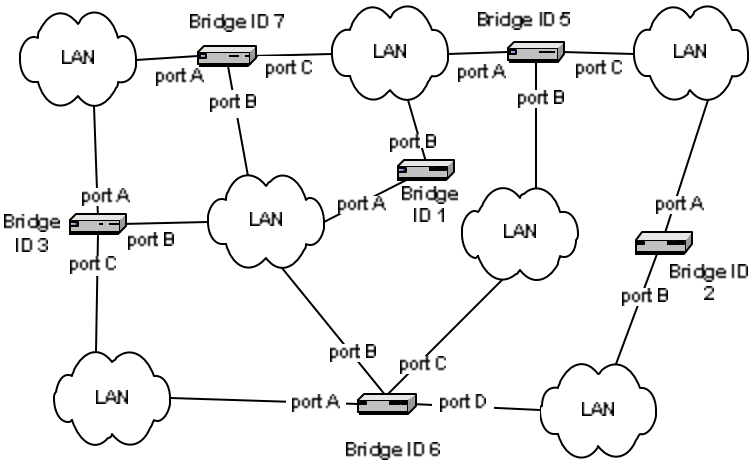

36

Example: BPDU's sent by the bridges

	Bridge 1	Bridge 2	Bridge 3	Bridge 5	Bridge 6	Bridge 7
T=0sec						
T=1sec						
T=2sec						

37

Example: Settings after convergence

	Bridge 1	Bridge 2	Bridge 3	Bridge 5	Bridge 6	Bridge 7
Root Port						
Designated Ports						
Blocked ports						

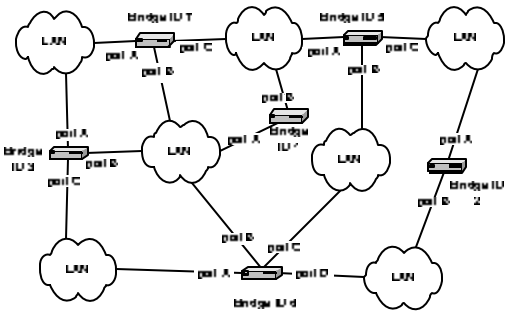

38