LAN TECHNOLOGIES

Technology Options

- Ethernet
- Fast Ethernet
- Gigabit Ethernet
- 10 Gig Ethernet

- WLAN

Media Access

- **Ethernet and Wi-Fi are both "multi-access" technologies**
  - Broadcast medium, shared by many hosts
  - Simultaneous transmissions will result in collisions
- **Media Access Control (MAC) protocol required**
  - Rules on how to share medium
- **The Data Link Layer is divided into two Part MAC Media Access Control) Sublayer and LLC (Logic Link Control) Sublayer**

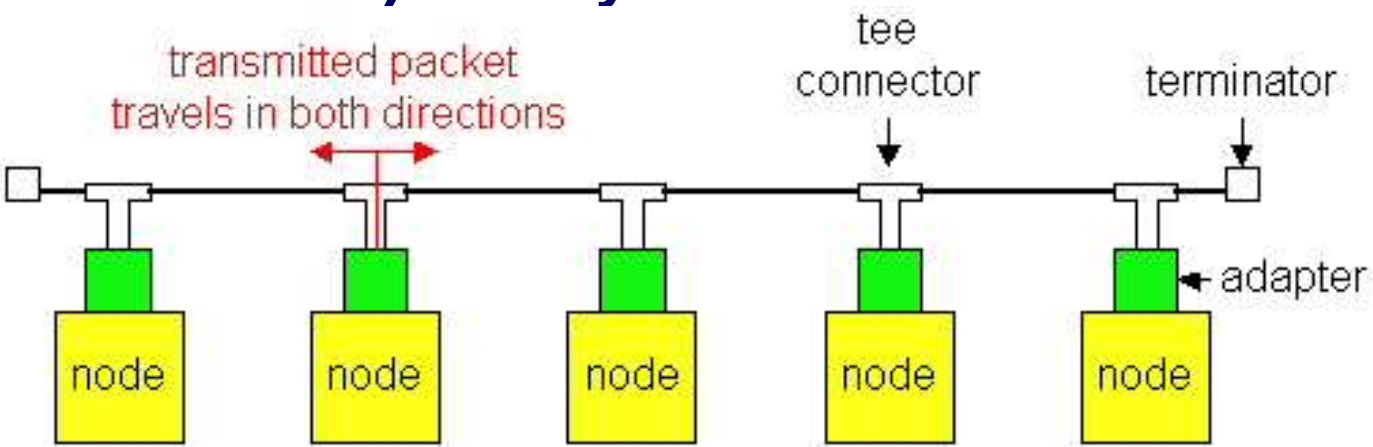

802.3 Ethernet

- **Carrier-sense multiple access with collision detection (CSMA/CD).**
  - CS = carrier sense
  - MA = multiple access
  - CD = collision detection
- **Base Ethernet standard is 10 Mbps.**
  - 100Mbps, 1Gbps, 10Gbps standards came later

Ethernet CSMA/CD

- **CSMA/CD (carrier sense multiple access with collision detection) media access protocol is used.**
  - Data is transmitted in the form of packets.
  - Sense channel prior to actual packet transmission.
  - Transmit packet only if channel is sensed idle; else, defer the transmission until channel becomes idle.
  - After packet transmission is started, the node monitors its own transmission to see if the packet has experienced a collision.
  - If the packet is observed to be undergoing a collision, the transmission is aborted and the packet is retransmitted after a random interval of time using Binary Exponential Backoff algorithm.

Ethernet Address

- End nodes are identified by their Ethernet Addresses (MAC Address or Hardware Address) which is a unique 6 Byte address.
- MAC Address is represented in Hexa Decimal format e.g 00:05:5D:FE:10:0A
- The first 3 bytes identify a vendor (also called prefix) and the last 3 bytes are unique for every host or device

Ethernet Frame Structure

- **Preamble:**
  - 7 bytes with pattern 10101010 followed by one byte with pattern 10101011
  - Used to synchronize receiver, sender clock rates
- **Addresses:** 6 bytes, frame is received by all adapters on a LAN and dropped if address does not match
- **Length:** 2 bytes, length of Data field
- **CRC:** 4 bytes generated using CR-32, checked at receiver, if error is detected, the frame is simply dropped
- **Data Payload:** Maximum 1500 bytes, minimum 46 bytes
  - If data is less than 46 bytes, pad with zeros to 46 bytes

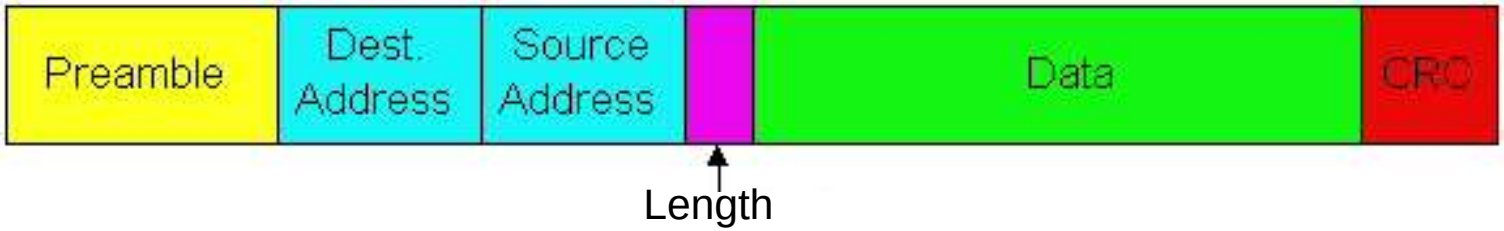

Ethernet

- 10 Base 5 (Thicknet) (Bus Topology)
- 10 Base 2 (Thinnet) (Bus Topology)
- 10 Base T (UTP) (Star/Tree Topology)
- 10 Base FL (Fiber) (Star/Tree Topology)

Ethernet BUS Topology

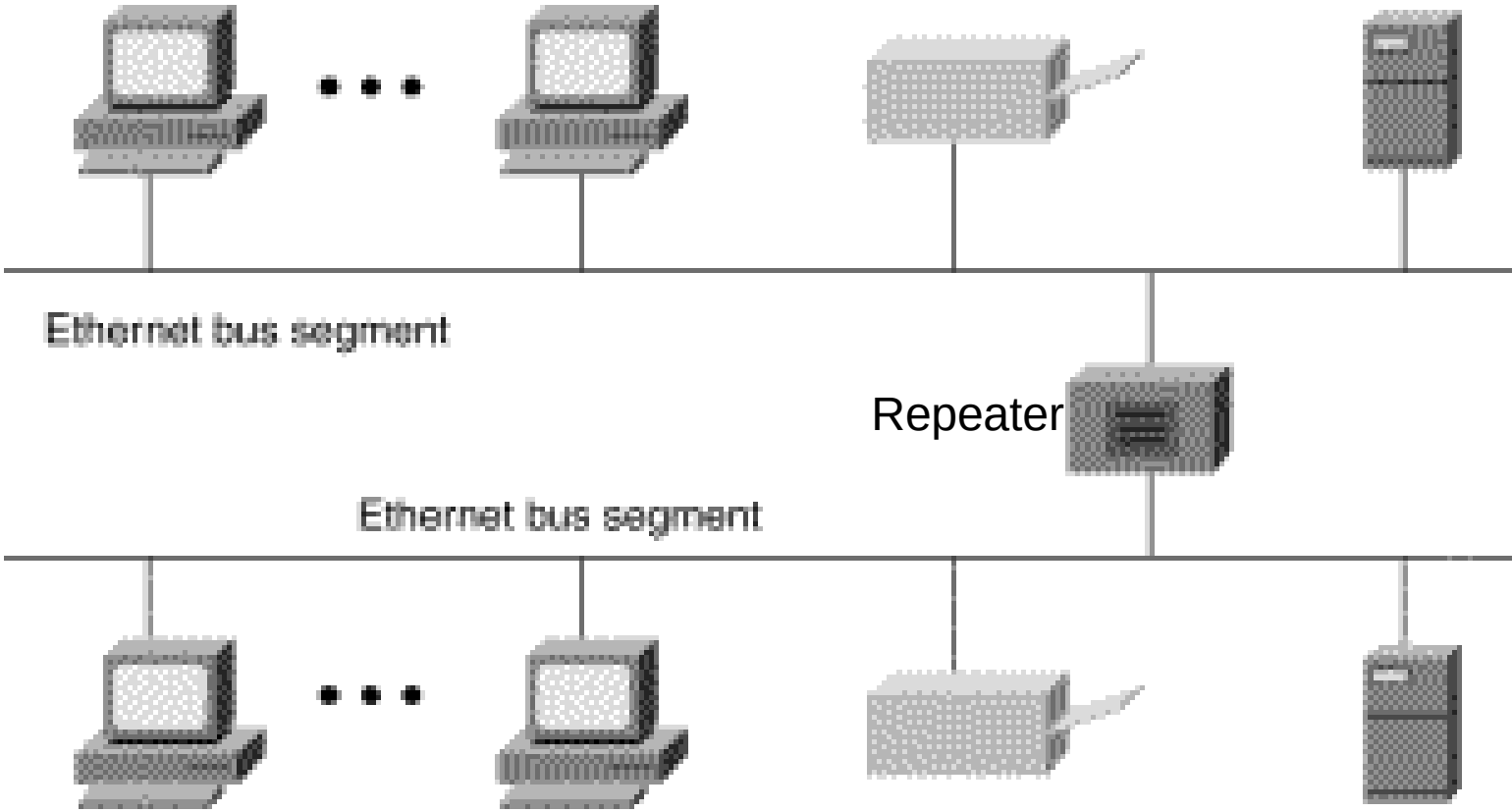

Ethernet STAR Topology

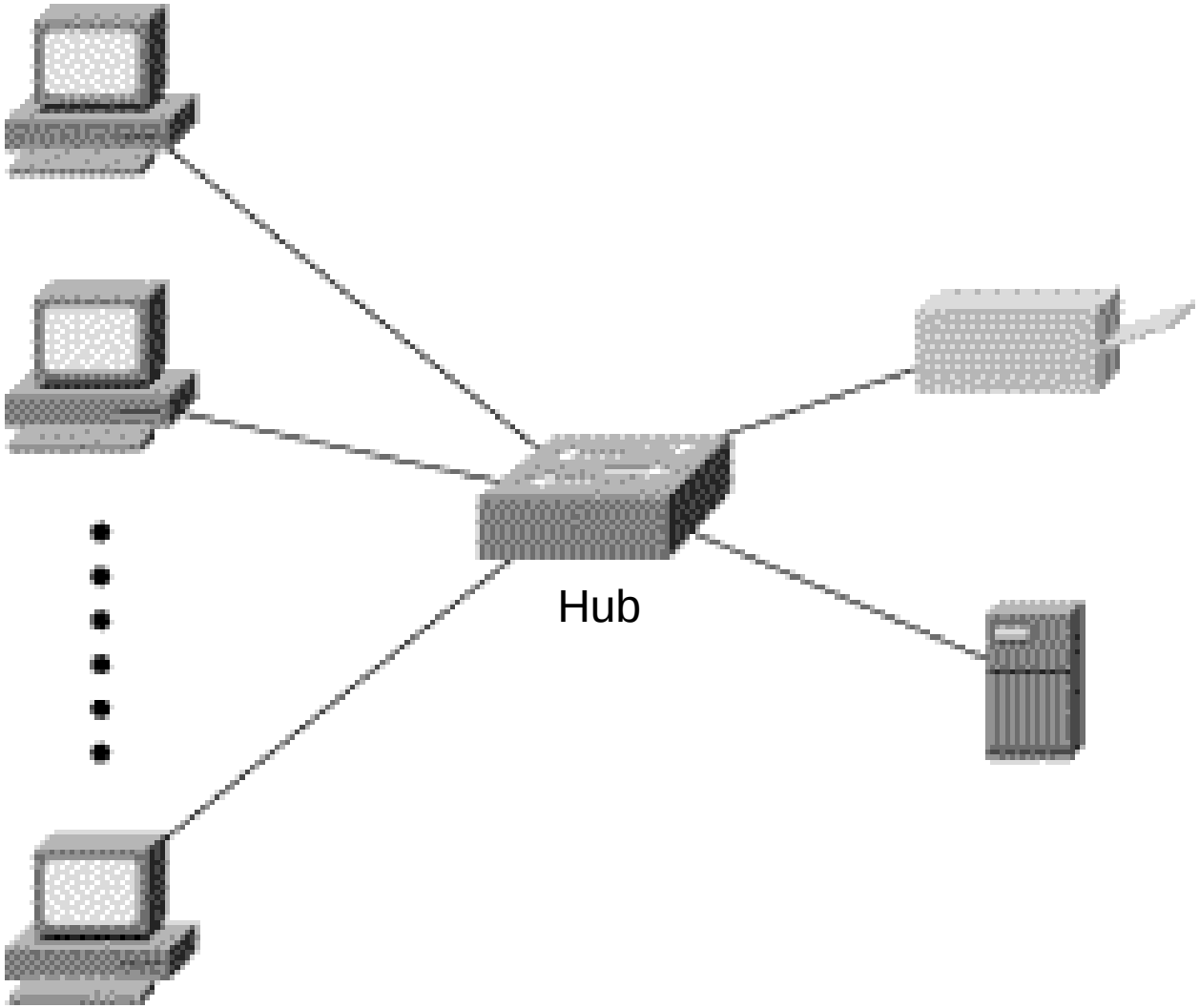

Ethernet

- **Physical Media :-**
  - 10 Base5 - Thick Co-axial Cable with Bus Topology
  - 10 Base2 - Thin Co-axial Cable with Bus Topology
  - 10 BaseT - UTP Cat 3/5 with Tree Topology
  - 10 BaseFL - Multimode/Singlemode Fiber with Tree Topology

- **Maximum Segment Length**
  - 10 Base5 - 500 m with at most 4 repeaters (Use Bridge to extend the network)
  - 10 Base2 - 185 m with at most 4 repeaters (Use Bridge to extend the network)
  - 10 BaseT - 100 m with at most 4 hubs (Use Switch to extend the network)

Fast Ethernet

- **100 Mbps bandwidth**
- **Uses same CSMA/CD media access protocol and packet format as in Ethernet.**
- **100BaseTX (UTP) and 100BaseFX (Fiber) standards**
- **Physical media :-**
  - 100 BaseTX - UTP Cat 5e
  - 100 BaseFX - Multimode / Singlemode Fiber
- **Full Duplex/Half Duplex operations.**

Fast Ethernet

- Provision for Auto-Negotiation of media speed: 10 Mbps or 100Mbps (popularly available for copper media only).

- Maximum Segment Length
  - 100 Base TX - 100 m
  - 100 Base FX - 2 Km (Multimode Fiber)
  - 100 Base FX - 20 km (Singlemode Fiber)

Gigabit Ethernet

- **1 Gbps bandwidth.**
- **Uses same CSMA/CD media access protocol as in Ethernet and is backward compatible (10/100/100 modules are available).**
- **1000BaseT (UTP), 1000BaseSX (Multimode Fiber) and 1000BaseLX (Multimode/Singlemode Fiber) standards.**
- **Maximum Segment Length**
  - 1000 Base T - 100m (Cat 5e/6)
  - 1000 Base SX - 275 m (Multimode Fiber)
  - 1000 Base LX - 512 m (Multimode Fiber)
  - 1000 Base LX - 20 Km (Singlemode Fiber)
  - 1000 Base LH - 80 Km (Singlemode Fiber)

10 Gig Ethernet

- **10 Gbps bandwidth.**
- **Uses same CSMA/CD media access protocol as in Ethernet.**
- **Propositioned for Metro-Ethernet**
- **Maximum Segment Length**
  - 1000 Base-T - Not available
  - 10GBase-LR - 10 Km (Singlemode Fiber)
  - 10GBase-ER - 40 Km (Singlemode Fiber)