Local Area Networks (LAN)

- Sharing Transmission Media by Computers -

- Classifications of Computer Networks: LAN, MAN, WAN
- Point-To-Point Connection and Shared Medium
- LAN Topology: Star, Ring, Bus
- Typical LANs
  - Ethernet (CSMA/CD)
  - LocalTalk (CSMA/CA)
  - Wireless LAN
  - Token Ring
  - FDDI
  - ATM
- Unicast, Broadcast, Multicast

Classifications of Computer Networks

LAN – Local Area Network: A network that spans a small geographic area, such as a single building or buildings close to each other.
Examples: Ethernet, LocalTalk, Token Ring, FDDI, ATM

PAN – Personal Area Network

MAN – Metropolitan Area Network: A network that can span a geographic area the size of a city.
Example: DQDB

WAN – Wide Area Network: A network that can span a large geographic area, e.g., multiple cities, countries or continents.
Examples: ARPANET, X.25, Frame Relay, SMDS, ATM

Point-To-Point Connection Network

Point-to-Point network provides a dedicated link between any two computers/devices

→ **Fully Connected**

- Dedicated link: used by only two computers and not shared with others
- High security and privacy
- $(N^2-N)/2$ links are needed for N computers/devices

  45 links (N=10), 4950 links (N=100), 499500 links (N=1000)
- Such a network is not practical because of its high cost and inflexibility

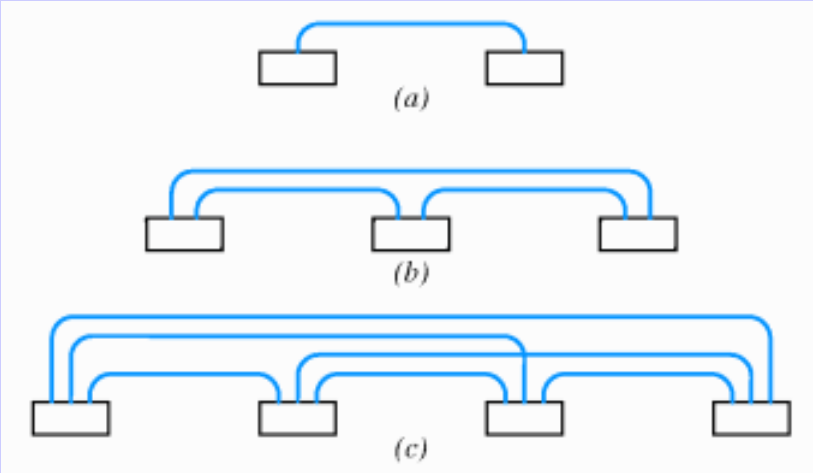

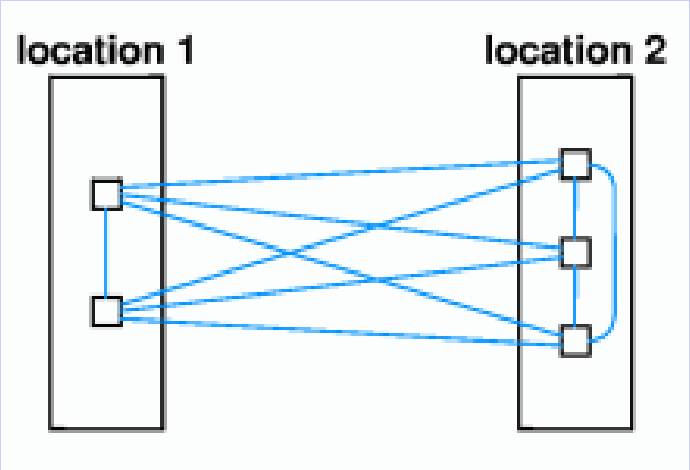

Shared Communication Channel/Medium in LAN

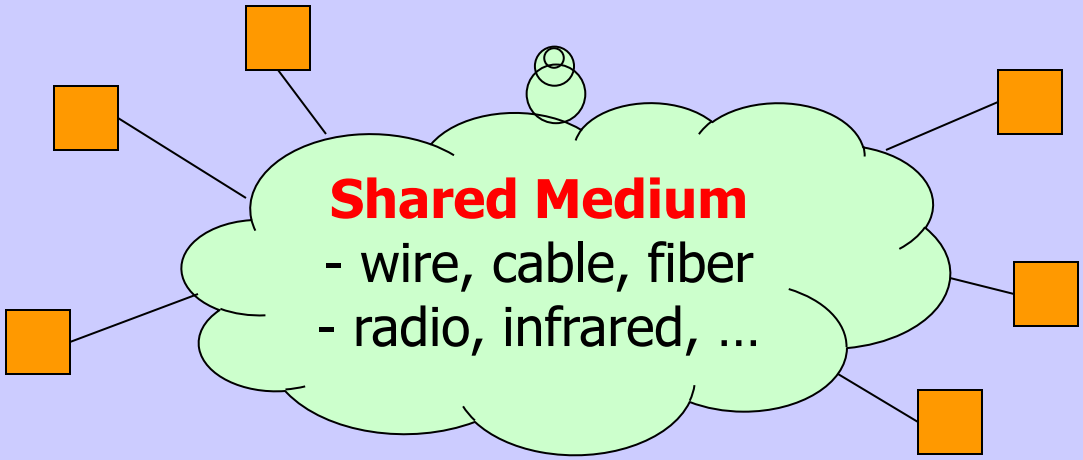

Key natures of LAN:

- **Media type**: wired/wireless, twisted pair/cable/fiber, radio/infrared
- **Topology:** network shape/connection method
- **Protocol:** how to use shared medium, media access control technique
  - a) TDM: only one computer can send data in a time
  - b) Frame: transfer element, each type of LAN has its own frame format
- **Bit rate/speed**: usually from 1Mbps~1Gbps

LAN Basic Topologies

Star Topology

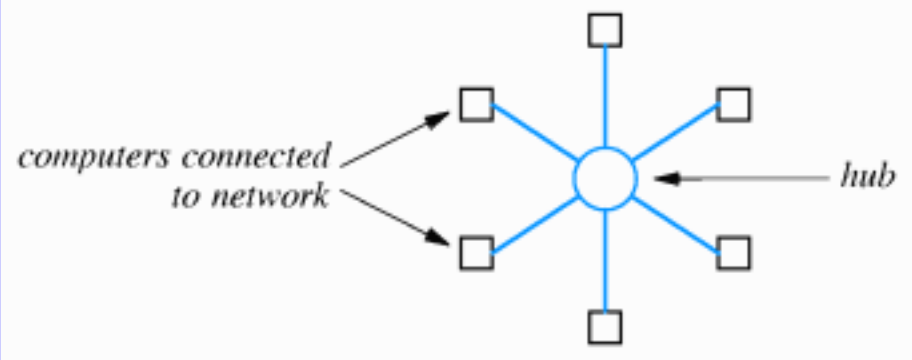

Ring Topology

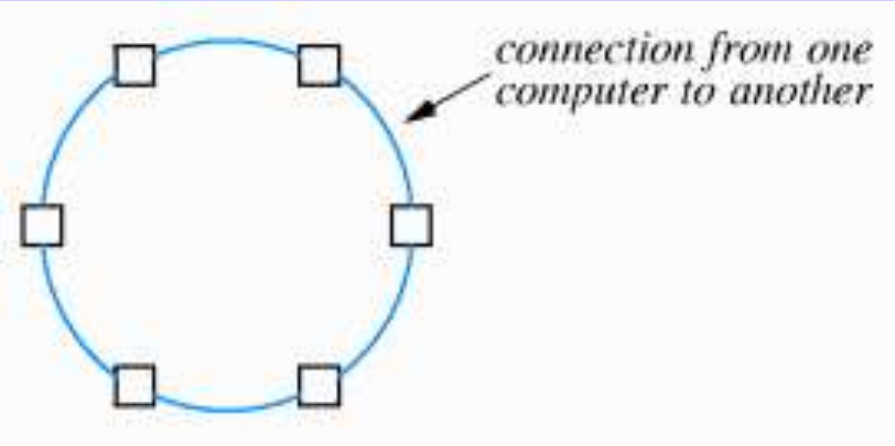

Bus Topology

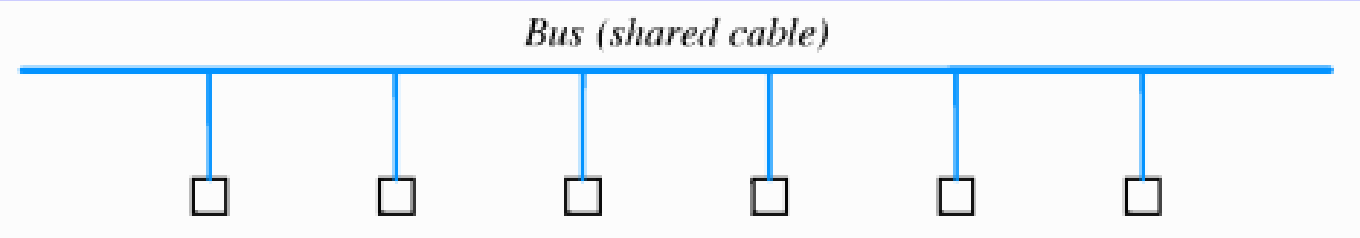

LAN Basic Topologies (cont.)

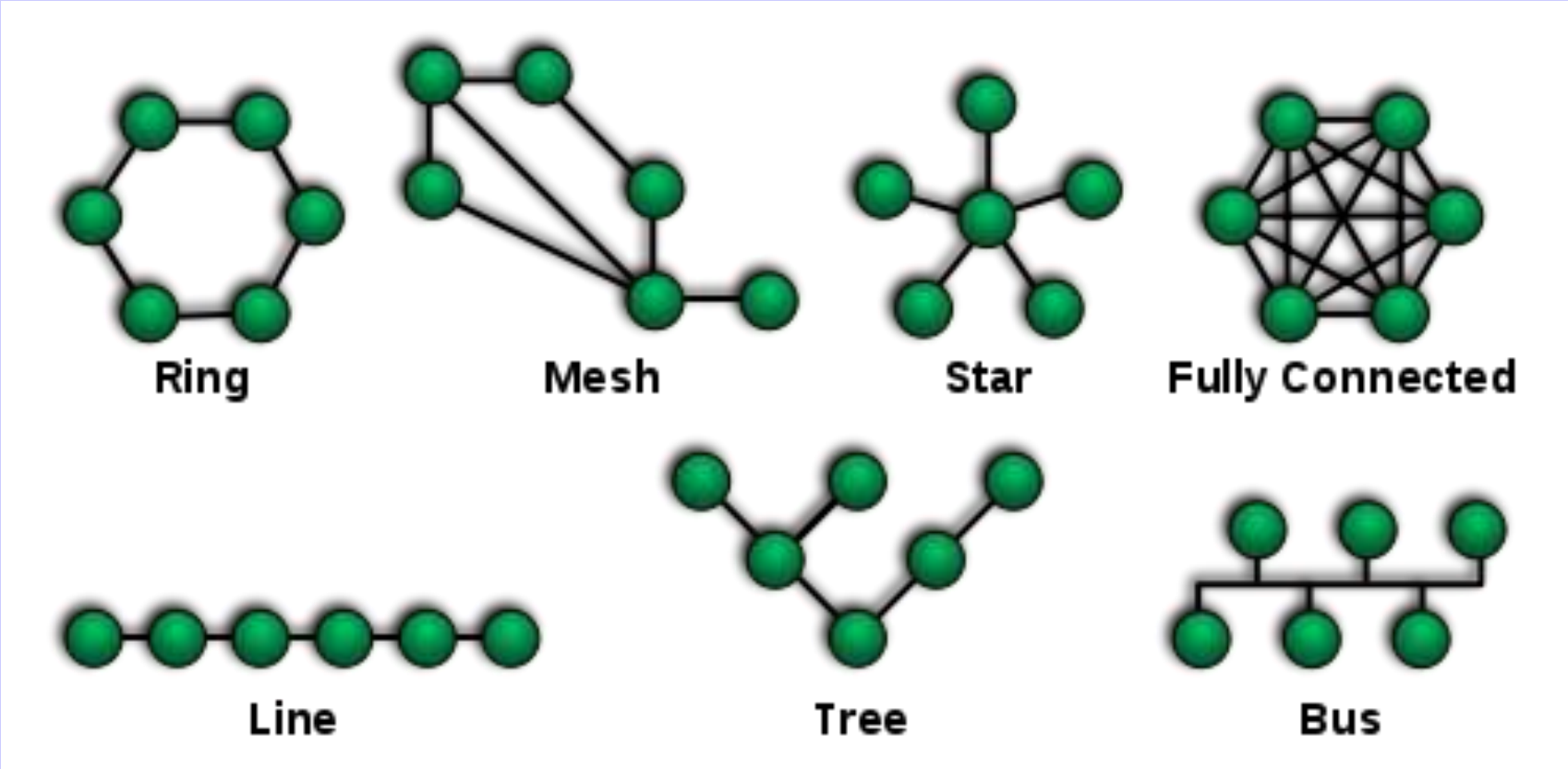

Ethernet – Bus Topology

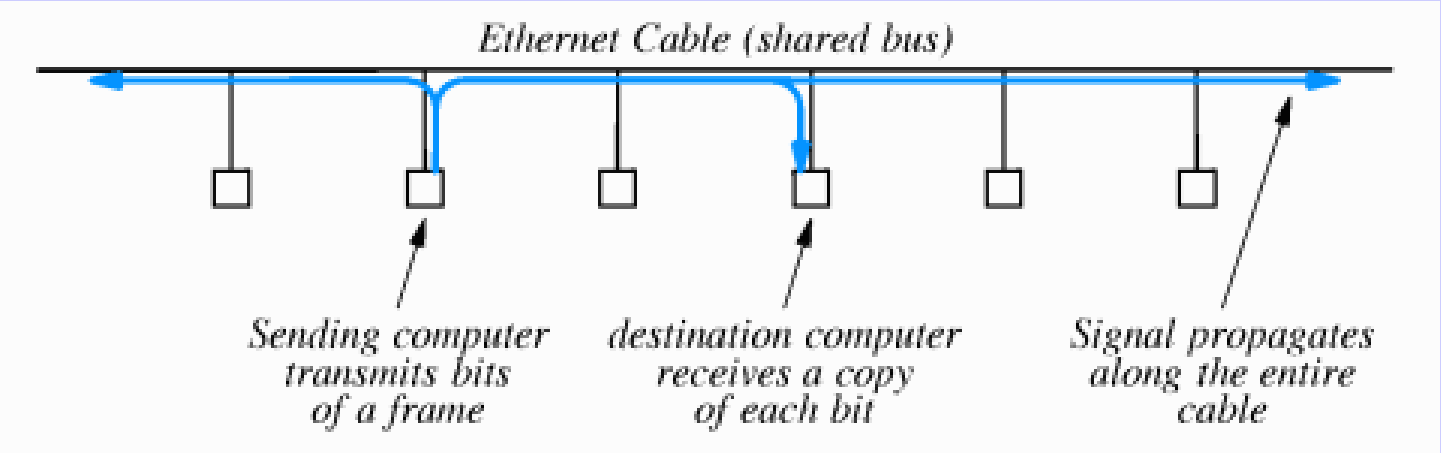

Media: Coax cable, twisted pair, fiber
Topology: Logic bus (physically may be bus or star)
Transmit: Only one can transmit at any time, all others receive transmission
Speed: 10Mbps, 100Mbps (Fast Ethernet) and 1000Mbps (Gigabit Ethernet)
Status: Most popular LAN and widely used
History: Invented at Xerox (Palo Alto Research Center) in 1970s
Defined a DIX standard by Digital Equipment, Intel and Xerox
IEEE currently controls Ethernet standards
- Project 802.3 – Ethernet
- Define media, voltages, encoding, data rates, frames, wiring, …

When to Start Transmit – CSMA

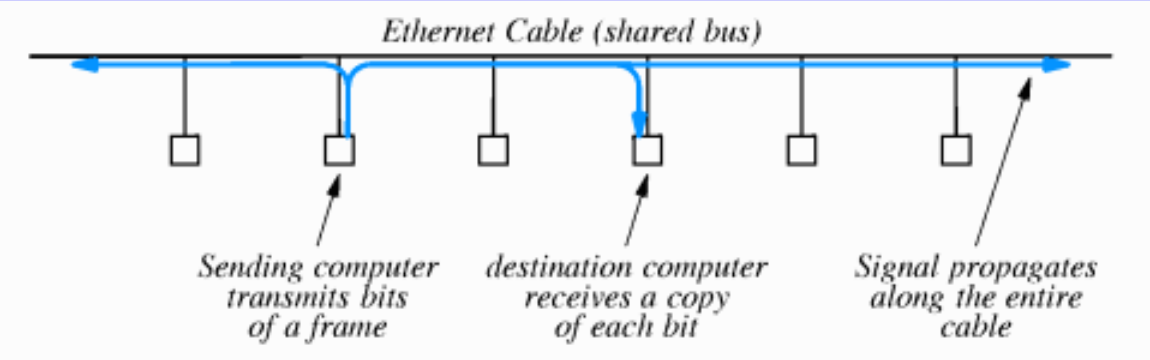

Animation

All computers connect to a bus but only one can transmit at a time.→Who can?
No central controller/manager when computers transmit on the bus!!
Ethernet employs CSMA to coordinate transmissions among multiple computers.
CSMA (Carrier Sense with Multiple Access)
- **MA** (Multiple Access): multiple computers are attached, any can access bus
- **CS** (Carrier Sense): a computer listens to carrier before sending data
  → waits if medium/bus is busy (another computer is transmitting)
  → transmits if medium/bus is idle (no one transmits)

When to Start Transmit – CSMA/CD

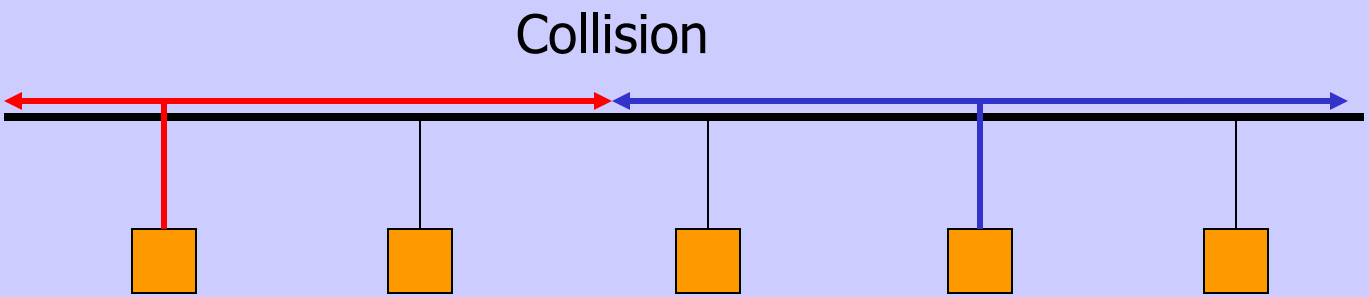

Animation

Animation

Even with CSMA, two computers may transmit simultaneously
- Both find it idle and begin transmitting in almost a same time
- Two signals exist in medium, interfere each other, call collision

CD (Carrier Detection)
- Monitor outgoing signal
- Stop transmissions after collision is detected
- Each waits random time in [0, S]
- Listen to the bus and transmit again if it is idle
- Wait random time in [0, 2S] if collisions is detected again
- Double waiting time range [0, 2^kS] when k+1 collisions detected
  → Called exponential backoff, very effective in practical

CSMA/CD Flowchart

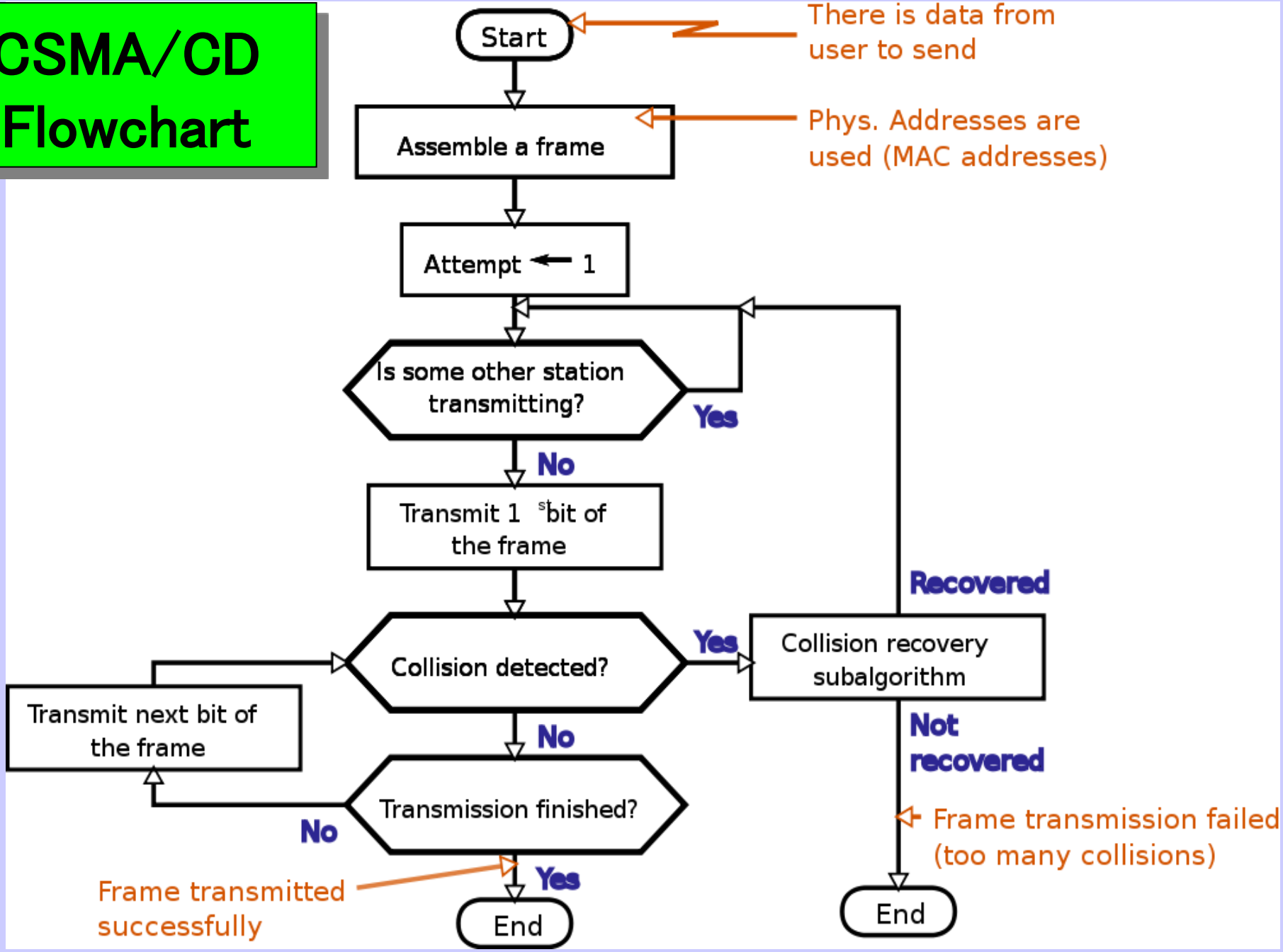

Inventors of Ethernet

Robert Metcalfe (1946, US)
David R. Boggs (1950, US)

- Developed at Xerox PARC, 1973-1974
- Metcalfe identifies the day Ethernet: May 22, 1973, circulated a memo titled "Alto Ethernet" containing a rough scheme.
- Boggs identifies another date as birth of Ethernet: November 11, 1973, the first day the system actually functioned.
- The two would co-invent Ethernet, with Metcalfe generating the ideas and Boggs figuring out how to build the system.
- Patented with the 2 & Thacker, Lampson (75)
- Metcalfe, Boggs, "Ethernet: Distributed Packet Switching for Local Computer Networks". Communications of the ACM (1976)

LocalTalk – Bus Topology

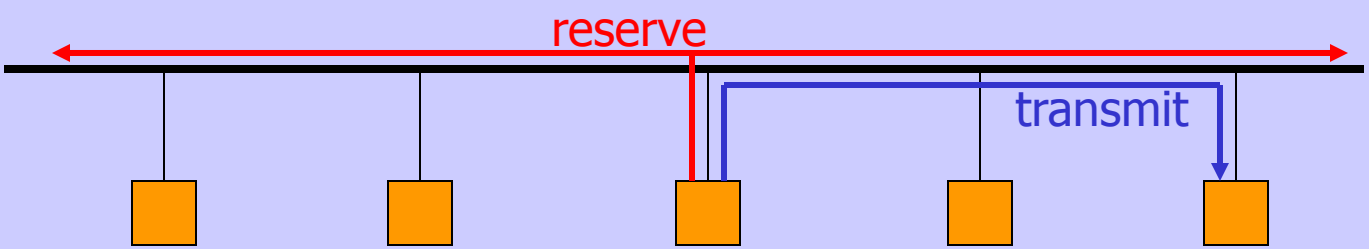

Media: Coax cable, twisted pair
Topology: Logic bus (physically may be bus or star)
Transmit: Only one can transmit at any time, all others receive transmission
Speed: 230.4 kbps
Status: IEEE Project 802.4, Apple's Macintosh computers, low cost & easy install
CSMA/CA: Using CSMA to listen and transmit
Using **CA** (collision avoidance) rather than **CD** (collision detection)
- send a short message to reserve the bus if it is idle
- transmit a frame if reservation is successful (no collision)
- listen and reserve again

Wireless LAN – Bus Topology

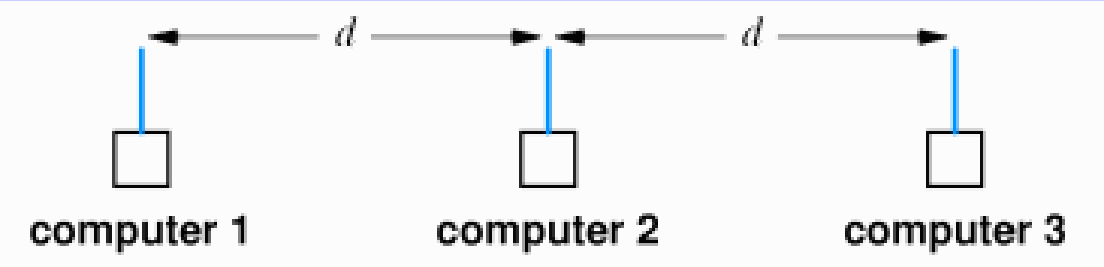

Media: Air (infrared, spread spectrum, narrowband microwave)
Topology: Logic bus
Transmit: Only one can transmit, not all others can receive transmission
depended upon transmitting energy and distance
Speed: 1~10Mbps (infrared), 1~20Mbps (spread), 10~100Mbps (MW)
Status: IEEE Project 802.11, many products from different companies
CSMA/CA: Using CSMA to listen and transmit
Using CA (collision avoidance) rather than CD (collision detection)
- send a RTS message to reserve the medium if it is idle
- transmit a frame if receiving a destination's CTS (no collision)
- listen and reserve again

RTS: Request To Send, CTS: Clear To Send → Hidden node problem

CSMA/CA Flowchart (IEEE802.11)

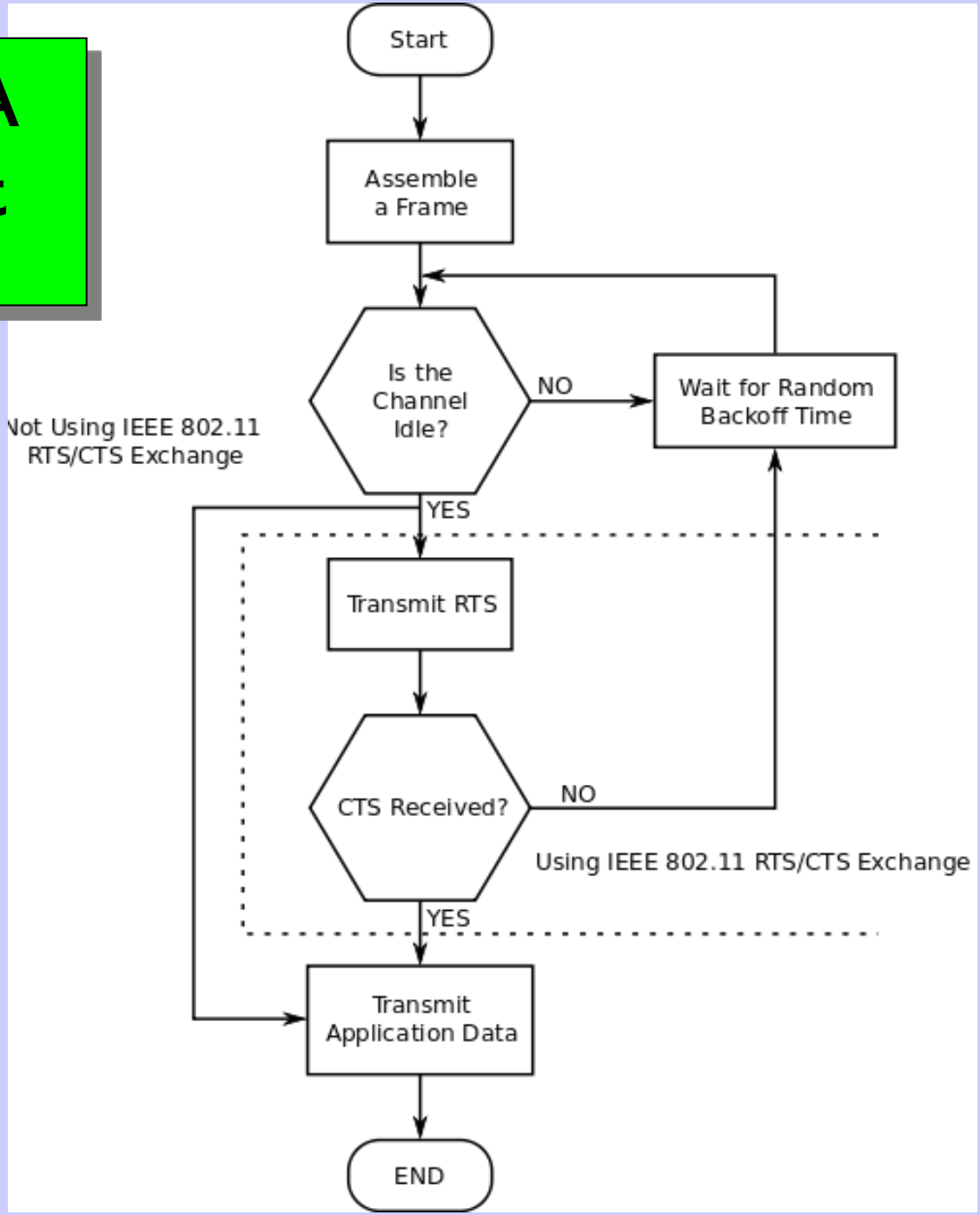

Wireless **LAN**

- Wireless LAN: small range (< 100m)
- IEEE 802.11 (similar to Ethernet)
  - Defined by IEEE (Institute for Electrical and Electronic Engineers)
  - Access control: CSMA/CD (only one can send each time similar to TDMA, listen and transmit if no other transmission, otherwise wait)
  - Speed: 2Mbps (infrared), >10Mbps (Microwave, 2.4/5.2GHz)
- HIPERLAN
  - Defined by ETSI (European Telecommunication Standard Institute)
  - Access control: dynamic TDMA
  - Speed: 25Mbps (5GHz) and 155Mbps (17GHz)
- HomeRF
  - Defined by Home Radio Frequency Working Group (Industry, 1998)
  - Access control: similar IEEE 802.11 with priority and reservation control
  - Speed: 10Mbps (2.4GHz), supports both data, voice and streaming
- Bluetooth
  - Defined by Bluetooth Special Interest Group (SIG, industry)
  - Access control: TDD (Time Division Duplex) with circuit and packet switch
  - Speed: 1M~10bps

Wireless Application Landscape

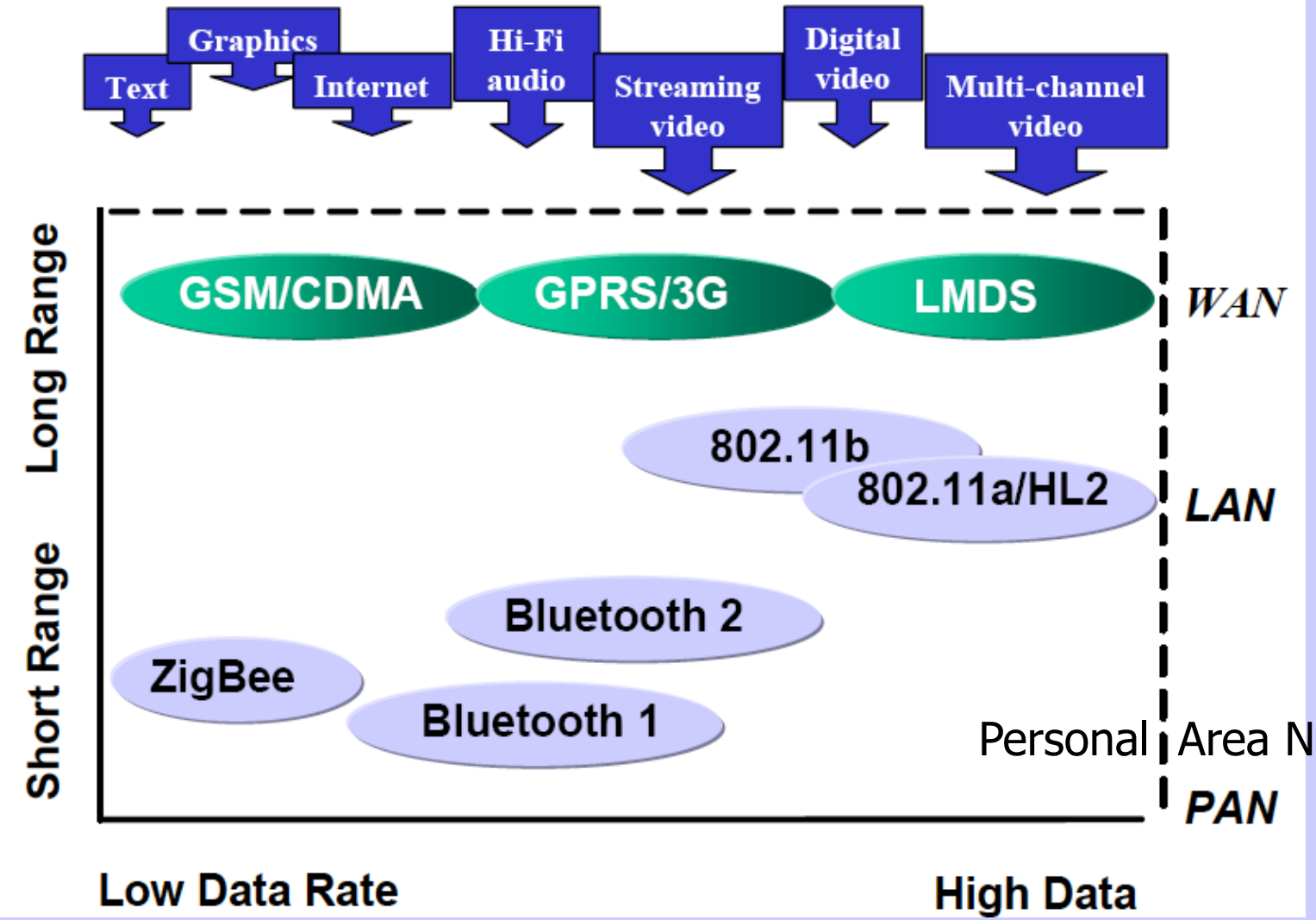

Station/Hardware Address and Frame

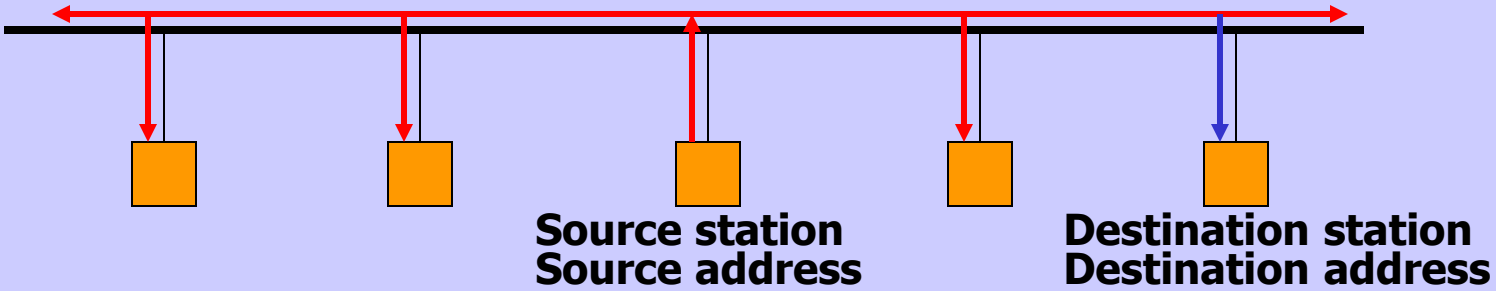

Packet

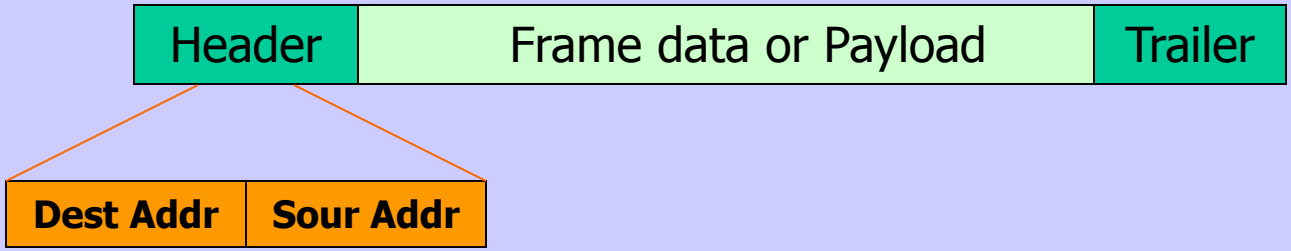

All stations (computers/devices) on shared-media LAN receive all transmissions
Each station assigned unique number, called station address or
hardware address fixed by manufacturer,
configured manually or electronically
provided dynamically by software
A sender specifies destination address and source address in its frame header

Destination Address and Transmission Mode

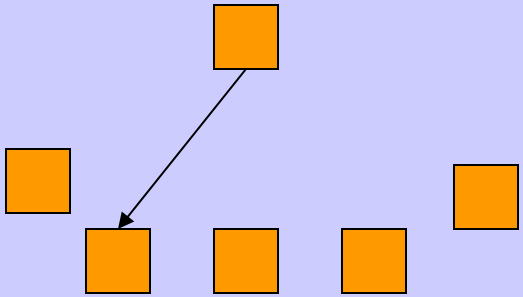

unicast

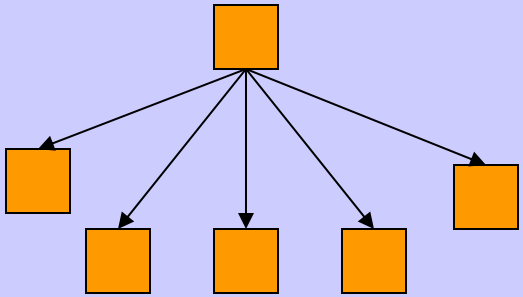

broadcast

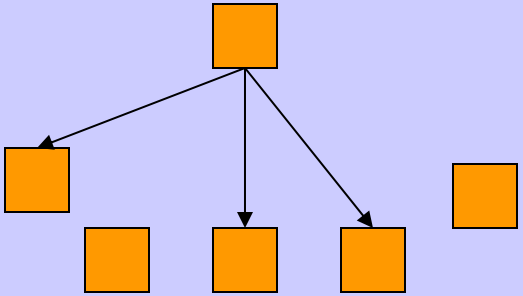

multicast

Packet can be sent to:
- Single destination (station address) called unicast (1-to-1)
- All stations (a special address), called broadcast (1-to-all)
- Subset of stations (special addresses), called multicast (1-to-m)

Ethernet
- Each station has 48bits (6 bytes) unique address assigned by manufacturer
- Broadcast address: all 1s address (1111…11)
- Multicast address: [1xx…x], half of addresses reserved for multicast

Ethernet Frame Format

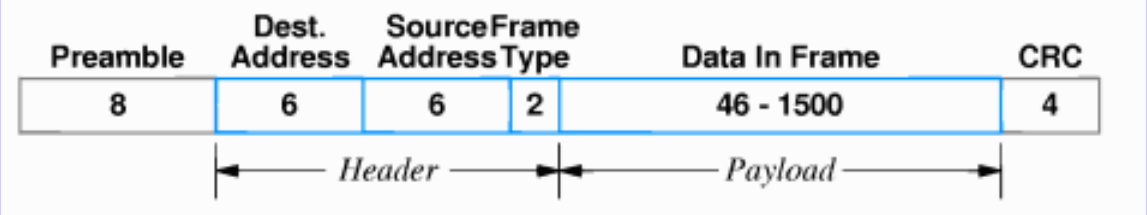

Preamble: 64bits (8 bytes) for receiver synchronization with incoming signal
Destination address and source address
Frame type (2 bytes):
- 0000~05DC Reserved for use with IEEE LLC/SNAP
- 0800 Internet IP Version 4
- 8008 AT&T Corporation
- 8014 Silicon Graphics Corporation network games
- 8137-8138 Novell Corporation IPX
- …

Data or Payload: Minimum 46 bytes and maximum 1500 bytes
CRC (4 bytes): Cyclic redundancy check

Token Ring – Ring Topology

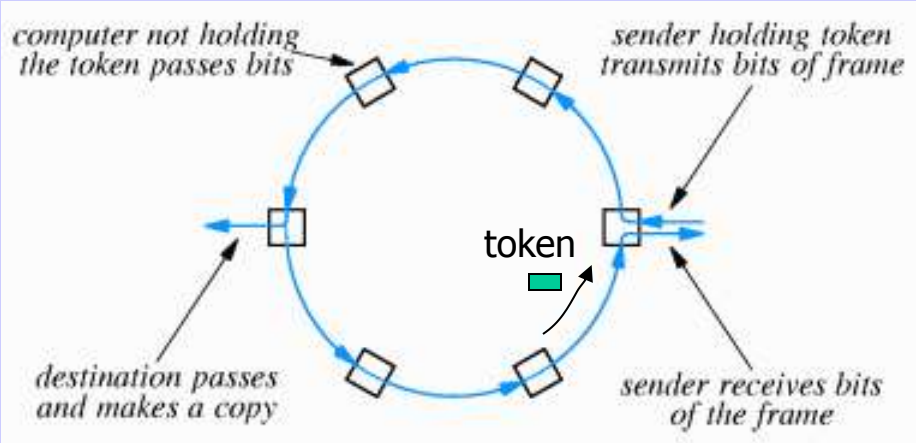

Token frame (3 bytes)

SD AC ED

SD: Start Delimiter
AC: Access Control
ED: End Delimiter
FC: Frame Control
FS: Frame Status

Data frame

SD AC FC DAdd SAdd	Payload	CRC ED FS

Up to 4550 bytes

Animation

Animation

Media: Twisted pair (TW), fiber
Topology: Logic ring (physically may be ring or star)
Transmit: Bits flow in single direction from sender, next, destination to send
Speed: 4, 16 or 100Mbps
Status: IEEE Project 802.5, first developed by IBM
Token: A permission to send data across the ring.
Only one token in a ring and the token rotates one by one.
If no data to be sent, computer passes received token to the next.
When a computer obtains the token, it can send a **single** packet.
A packet travels around entire ring and finally arrives source.

FDDI – Ring Topology

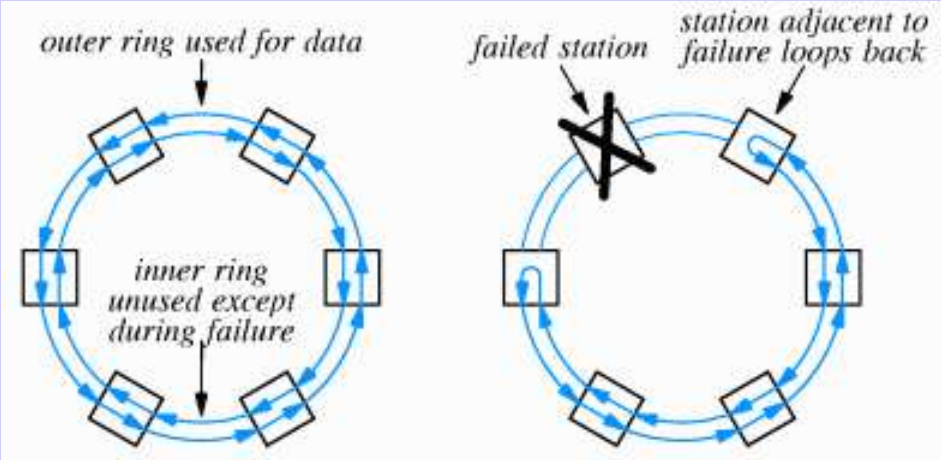

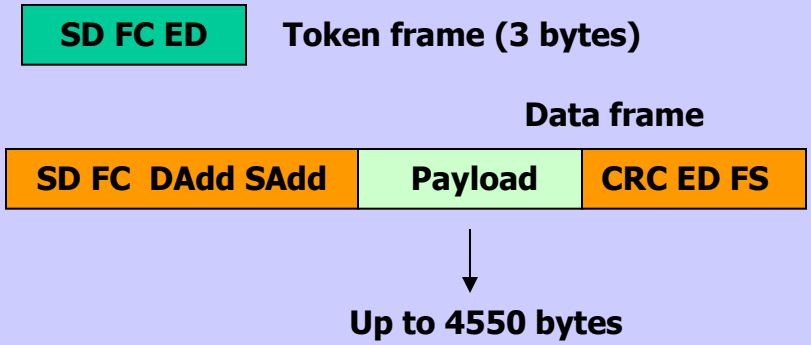

Features: multiple frames for MM data or RT trans.

Media: Fiber (Fiber Distributed Data Interconnect) or cable (CDDI)
Topology: Two rings
Transmit: Bits can flow in 2 directions for improving reliability
Speed: 100 Mbps
Status: ANSI standard, expensive than Ethernet and Token Ring
Token: A permission to send data across the ring.
Only one token in a ring and the token rotates one by one.
If no data to be sent, computer passes received token to the next.
When a computer obtains the token, it can send a single packet.
A packet travels around entire ring and finally arrives source.

ATM LAN – Star Topology

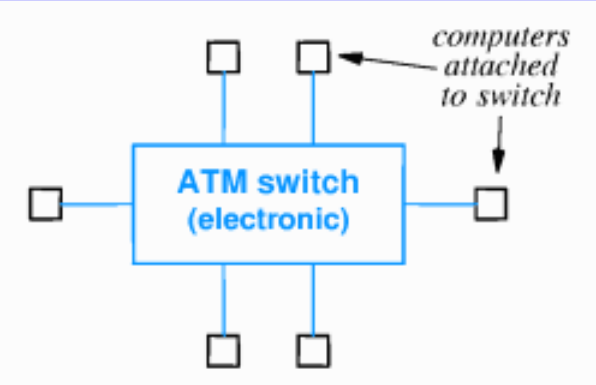

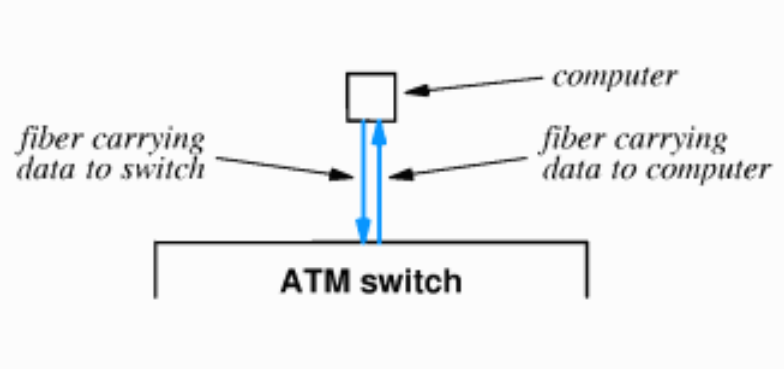

ATM: Asynchronous Transmission Mode
Media: Fiber
Topology: Star
Transmit: More than one can transmit because of using switch
Speed: 25, 45, 155, 622 Mbps
Status: ATM Forum and ATM Consortium, high speed for multimedia com
Switch: Each station connects to switch with full-duplex connections.
Computers send data independently and simultaneously.
Packet size is very small, 53 bytes, called cell.
Very expensive

Exercise 4

1. Prove that the total number of links in a point-to-point network with N computers is $(N^2-N)/2$

2. For each of bus, star and ring topologies, discuss the consequences if a station has broken.

3. In most technologies, a sending station can choose the amount of data in a frame, but the frame header is a fixed size. Calculate the percentage of bits in a frame devoted to the header, trailer and preamble for the largest and smallest Ethernet frame.

4. Assume a one megabyte file must be send from one computer to another (both are connected to a same 10BaseT Ethernet). What is the minimum time to send the file across the network? What is the minimum time across a Fast Ethernet? Across a gigabit Ethernet?

5. Give the definitions and examples of unicast, broadcast and multicast, respectively.