Layer 2
Network Design

Layer-2 Network Design

- A good network design is modular and hierarchical, with a clear separation of functions:
  - Core: Resilient, few changes, few features, high bandwidth, CPU power
  - Distribution: Aggregation, redundancy
  - Access: Port density, affordability, security features, many adds, moves and changes

Layer-2 Network Design - Simple

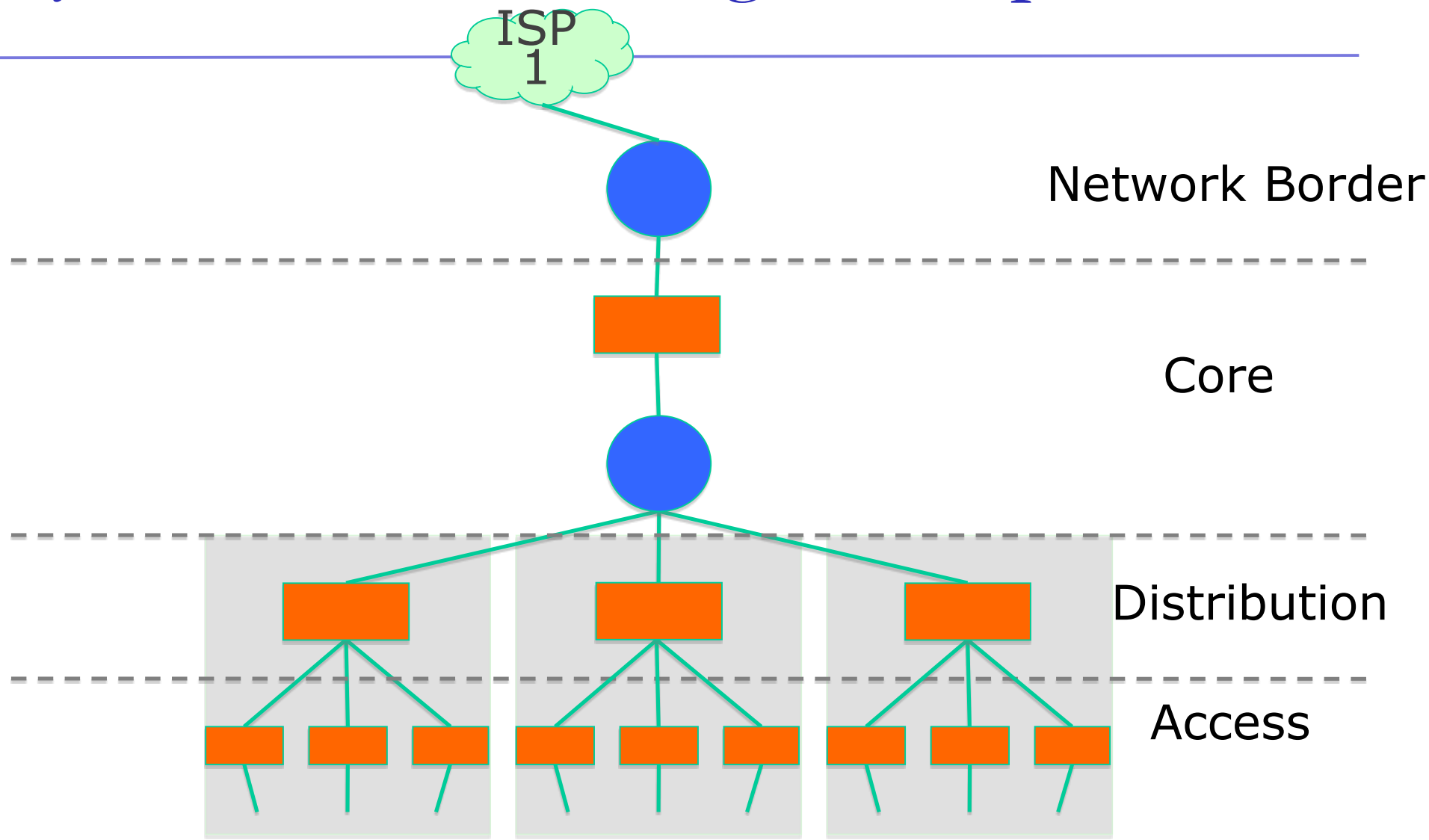

Layer-2 Network Design - Redundant

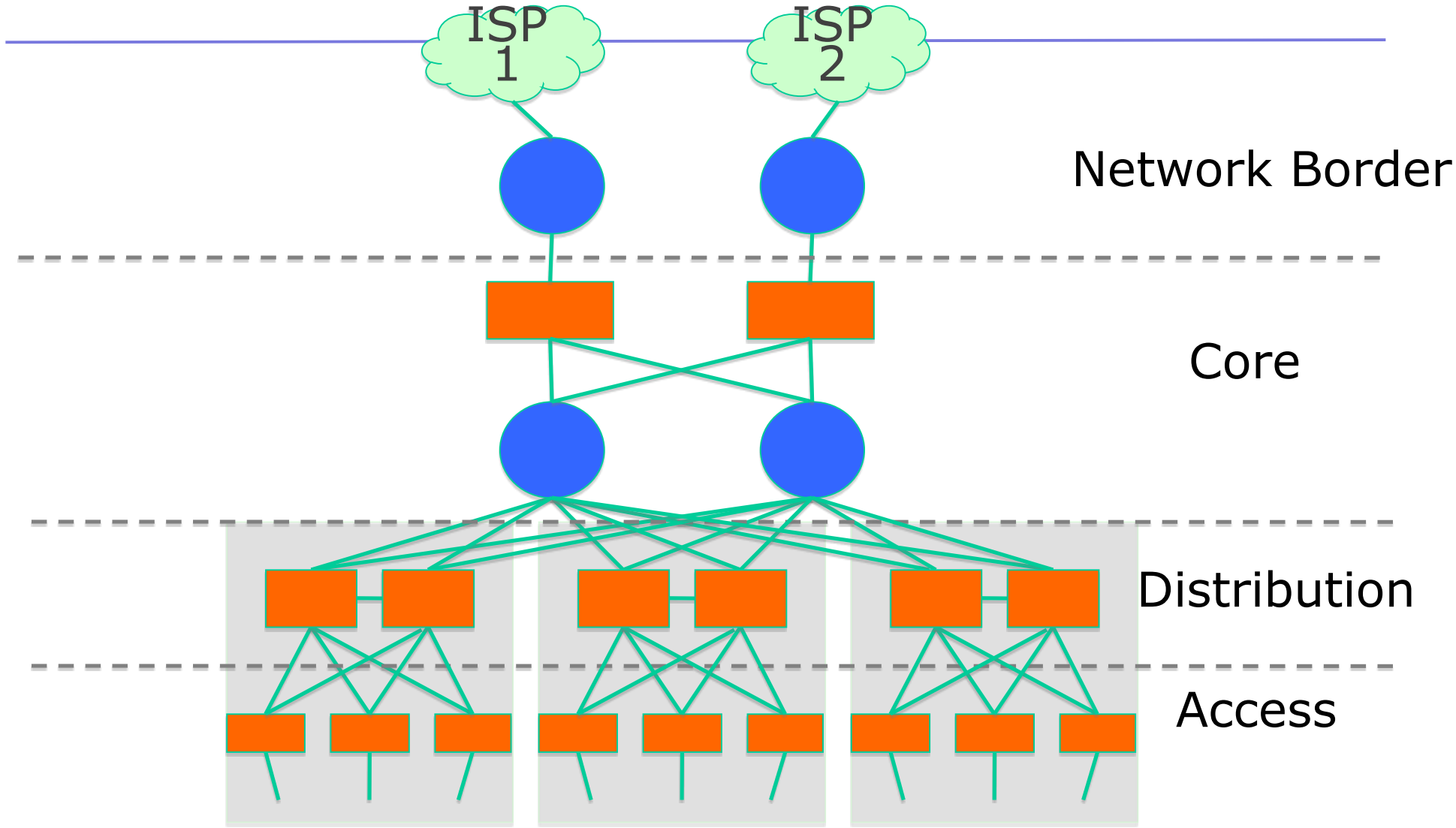

In-Building and Layer 2

- There is usually a correspondence between building separation and subnet separation
  - Switching inside a building
  - Routing between buildings
- This will depend on the size of the network
  - Very small networks can get by with doing switching between buildings
  - Very large networks might need to do routing inside buildings

Layer 2 Concepts

- Layer 2 protocols basically control access to a shared medium (copper, fiber, electro-magnetic waves)
- Ethernet is the de-facto wired-standard today
  - Reasons:
    - Simple
    - Cheap
    - Manufacturers keep making it faster
- Wireless (802.11a,b,g,n) is also Layer-2 technology.

Ethernet Functions

- Source and Destination identification
  - MAC addresses
- Detect and avoid frame collisions
  - Listen and wait for channel to be available
  - If collision occurs, wait a random period before retrying
    - This is called CASMA-CD: Carrier Sense Multiple Access with Collision Detection

Ethernet Frame

Normal Ethernet frame

Preamble: 7	SFD: 1	DA: 6	SA: 6	Type/Length: 2	Data: 46 to 1500	CRC: 4

- SFD = Start of Frame Delimiter
- DA = Destination Address
- SA = Source Address
- CRC = Cyclick Redundancy Check

Evolution of Ethernet Topologies

- Bus
  - Everybody on the same coaxial cable
- Star
  - One central device connects every other node
    - First with hubs (repeated traffic)
    - Later with switches (bridged traffic)
  - Structured cabling for star topologies standardized

Switched Star Topology Benefits

- It's modular:
  - Independent wires for each end node
  - Independent traffic in each wire
  - A second layer of switches can be added to build a hierarchical network that extends the same two benefits above
  - ALWAYS DESIGN WITH MODULARITY IN MIND

Hub

- Receives a frame on one port and sends it out <u>every other port, always</u>.
- Collision domain is not reduced
- Traffic ends up in places where it’s not needed

Hub

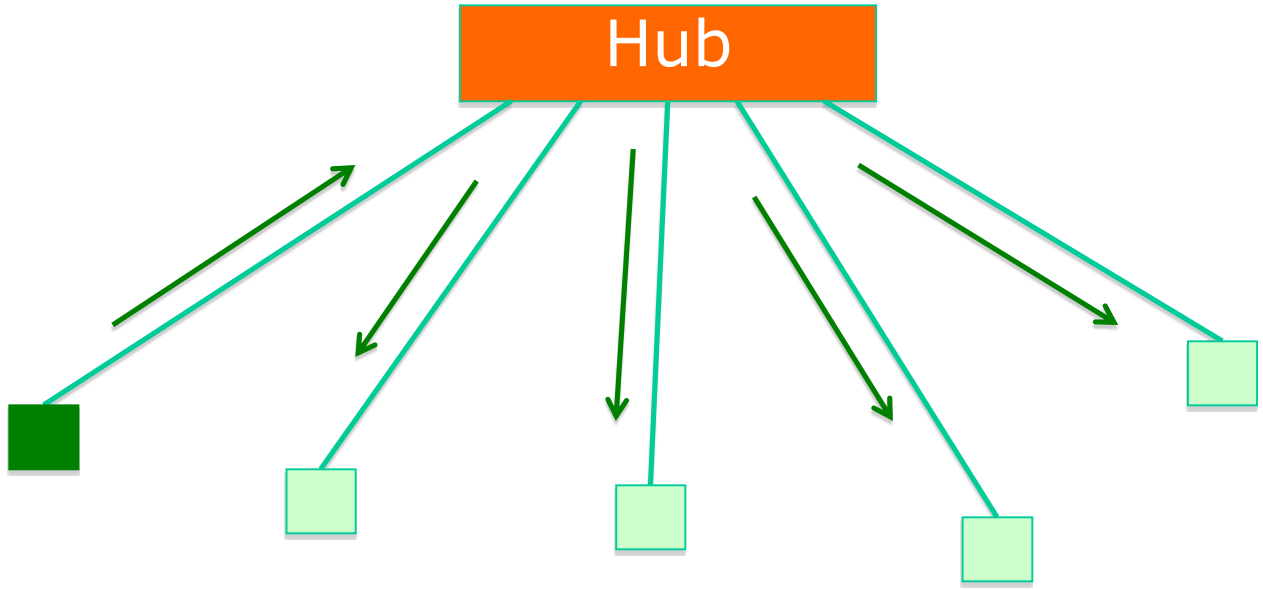

A frame sent by one node is always sent to every other node. Hubs are also called “repeaters” because they just “repeat” what they hear.

Switch

- ***Learns*** the location of each node by looking at the source address of each incoming frame, and builds a ***forwarding table***
- ***Forwards*** each incoming frame to the port where the destination node is
  - Reduces the collision domain
  - Makes more efficient use of the wire
  - Nodes don’t waste time checking frames not destined to them

Switch

Forwarding Table

Address	Port
AAAAAAAAAAAA	1
BBBBBBBBBBBB	5

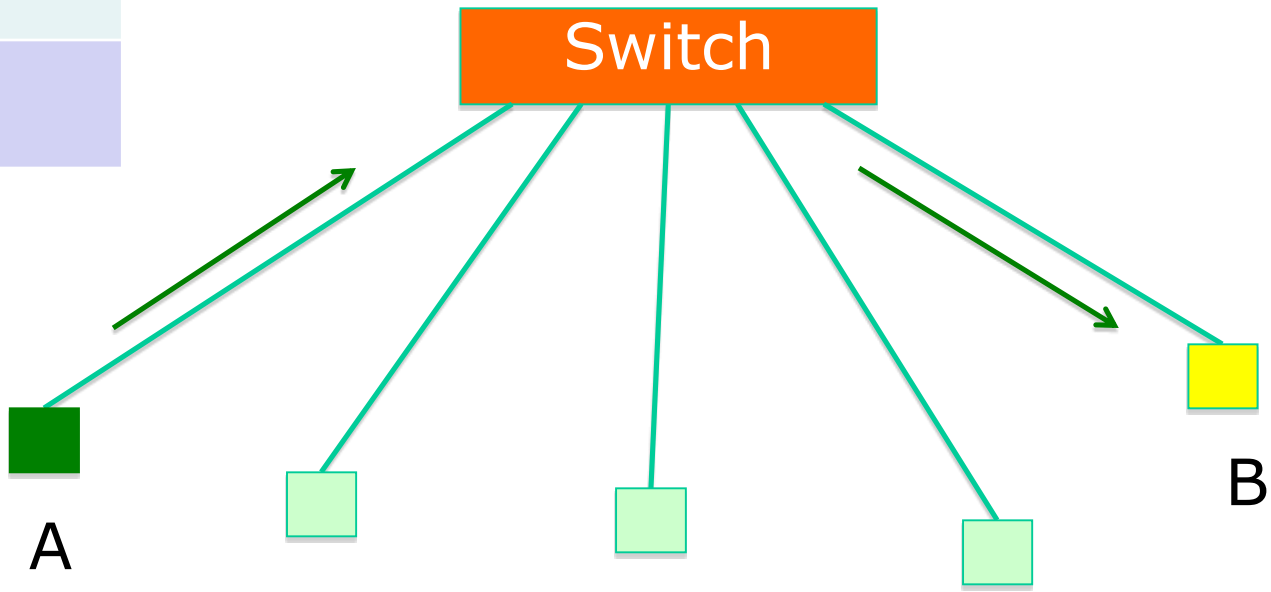

Switches and Broadcast

- A switch broadcasts some frames:
  - When the destination address is not found in the table
  - When the frame is destined to the broadcast address (FF:FF:FF:FF:FF:FF)
  - When the frame is destined to a multicast ethernet address
- So, switches do not reduce the broadcast domain!

Switch vs. Router

- Routers more or less do with IP packets what switches do with Ethernet frames
  - A router looks at the IP packet destination and checks its ***routing table*** to decide where to forward the packet
- Some differences:
  - IP packets travel inside ethernet frames
  - IP networks can be logically segmented into *subnets*
  - Switches do not usually know about IP, they only deal with Ethernet frames

Switch vs. Router

- Routers do not forward Ethernet broadcasts.
  - Switches reduce the collision domain
  - Routers reduce the broadcast domain

- This becomes ***really*** important when trying to design hierarchical, scalable networks that can grow sustainably

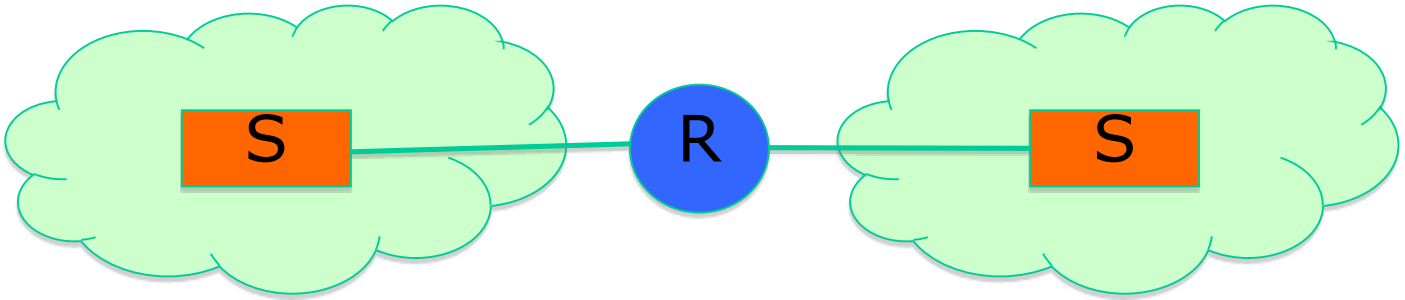

Traffic Domains

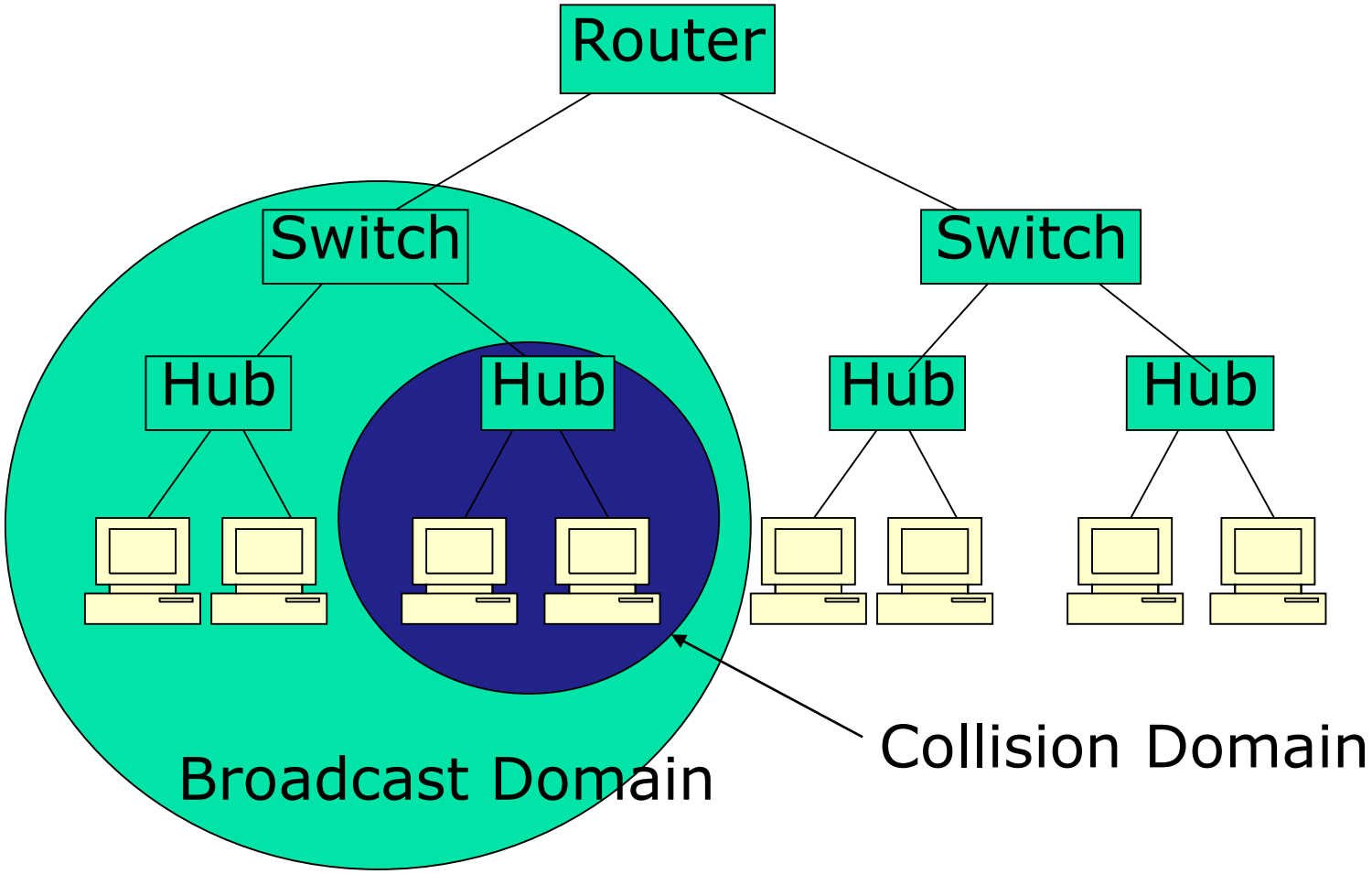

Traffic Domains

- Try to eliminate collision domains
  - Get rid of hubs!
  - Actually hubs are very rare today.
- Try to keep your broadcast domain limited to no more than 250 simultaneously connected hosts
  - Segment your network using routers

Layer 2 Network Design Guidelines

- Always connect <u>hierarchically</u>
  - If there are multiple switches in a building, use an aggregation switch
  - Locate the aggregation switch close to the building entry point (e.g. fiber panel)
  - Locate edge switches close to users (e.g. one per floor)
    - Max length for Cat 5 is 100 meters

Minimize Path Between Elements

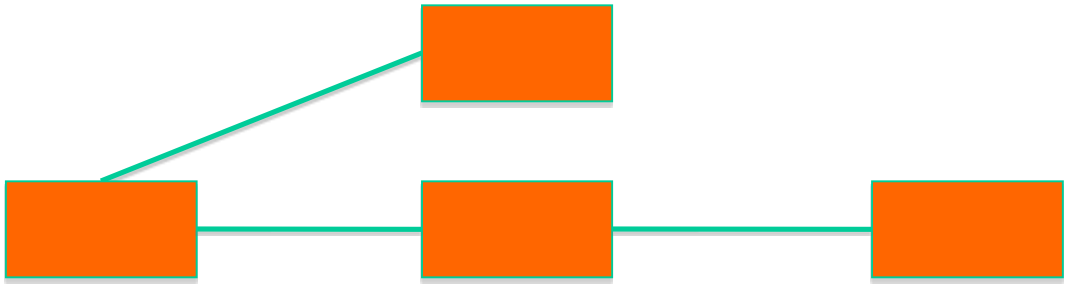

✗

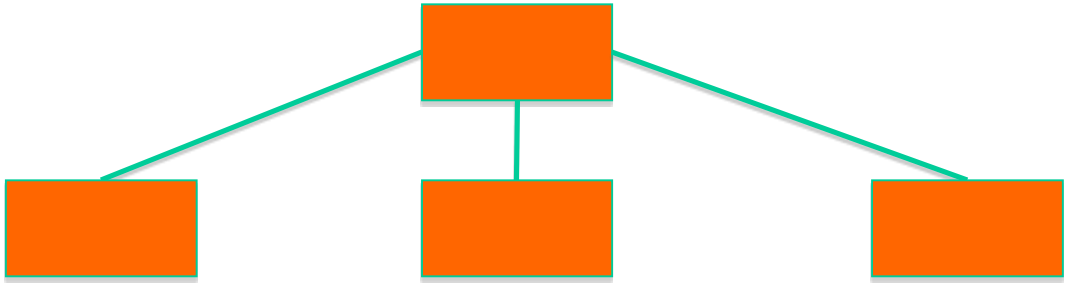

✔

Build Incrementally

- Start small

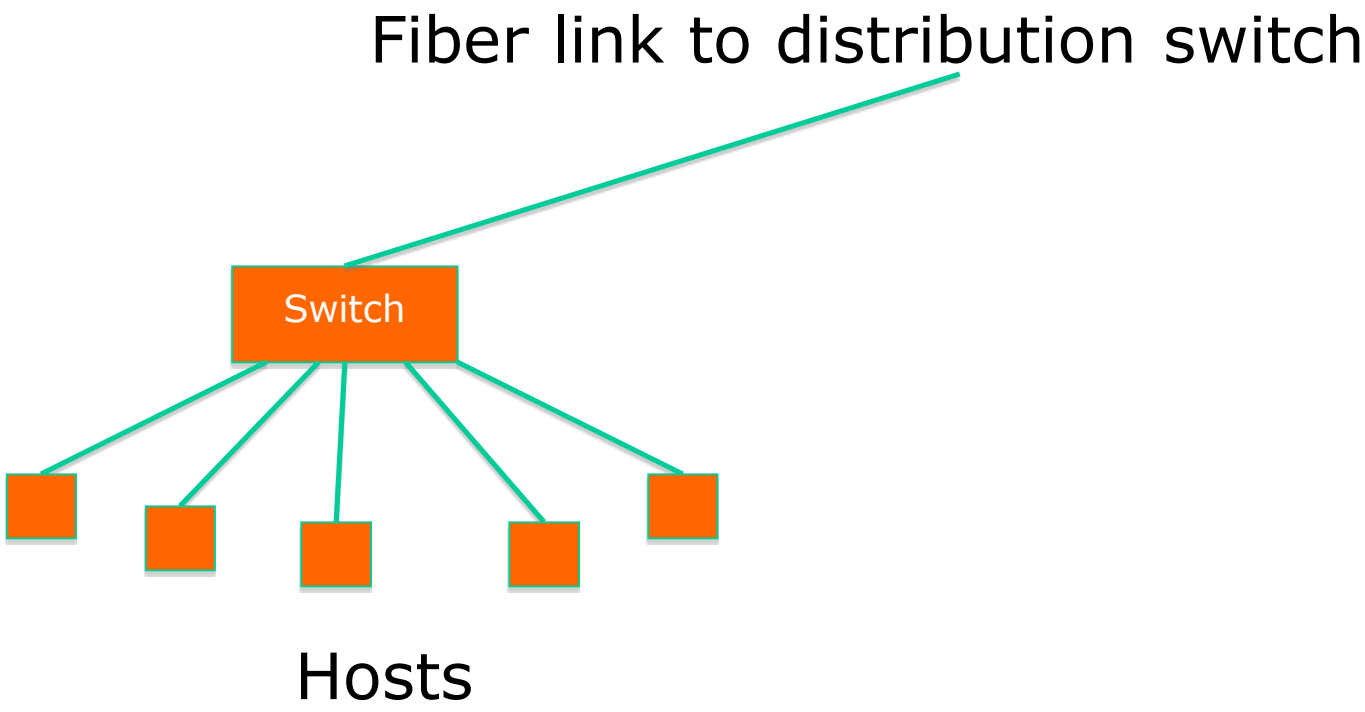

Build Incrementally

- As you have demand and money, grow like this:

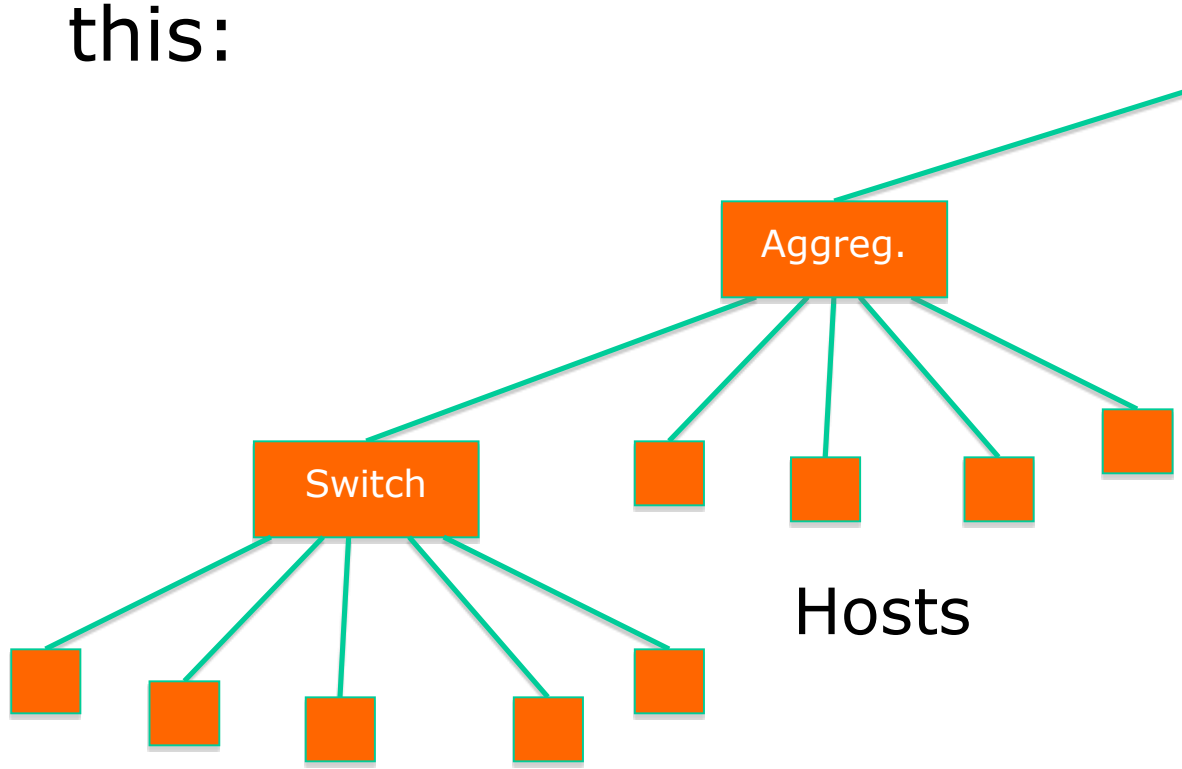

Build Incrementally

- And keep growing within the same hierarchy:

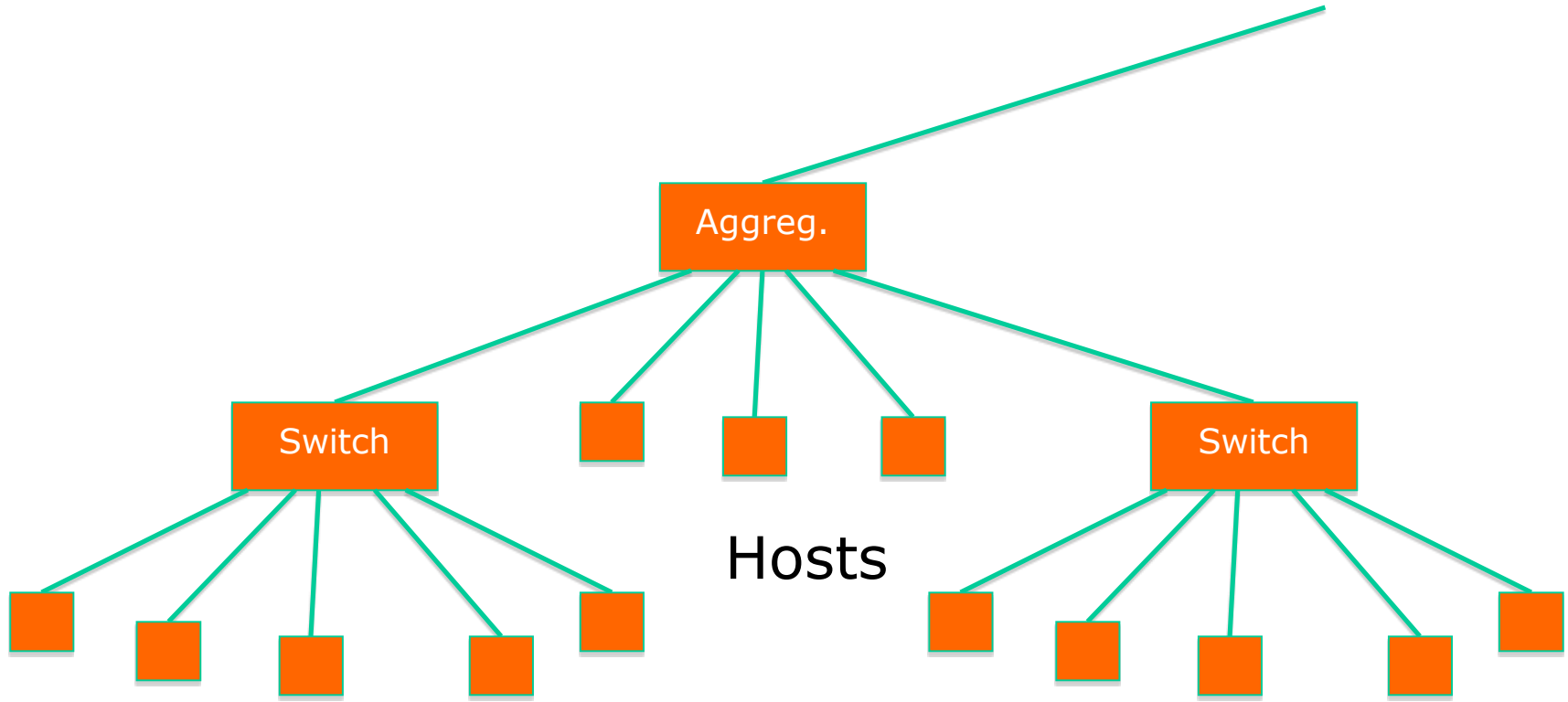

Build Incrementally

- At this point, you can also add a redundant aggregation switch:

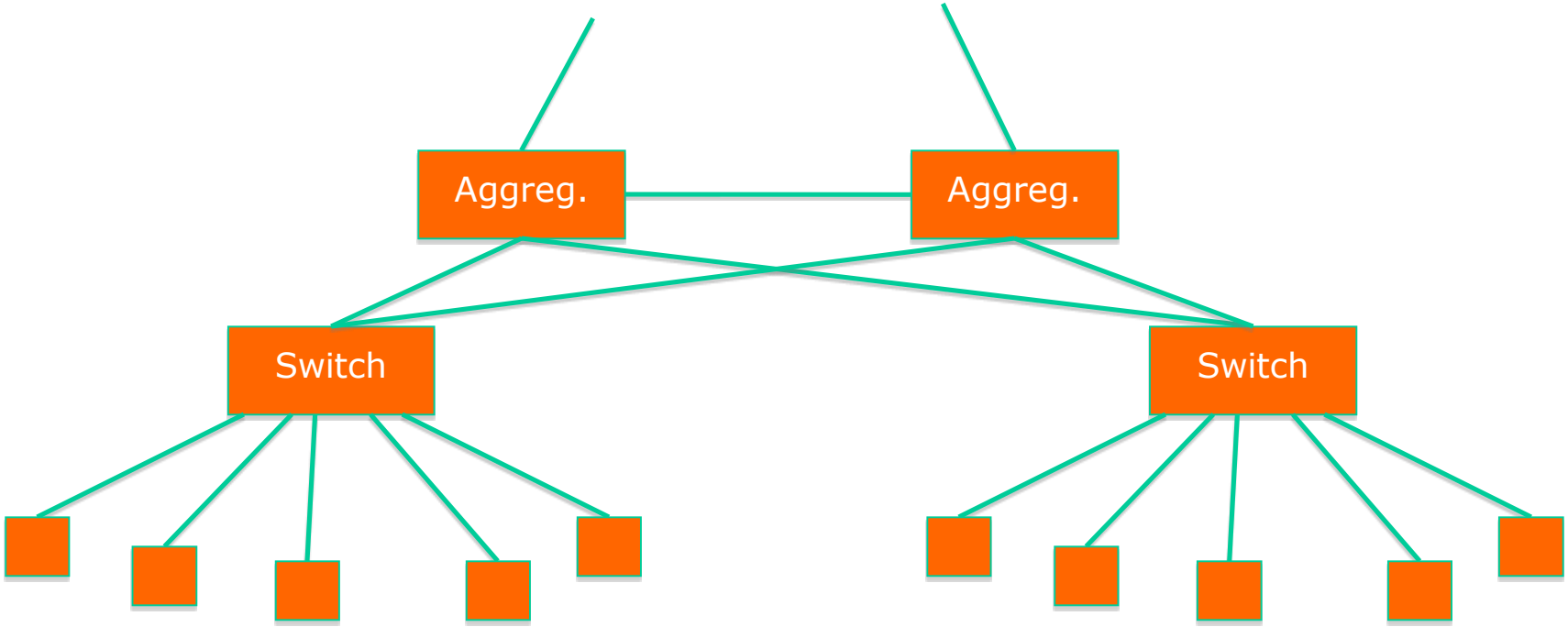

Do not daisy-chain

- Resist the temptation of doing this:

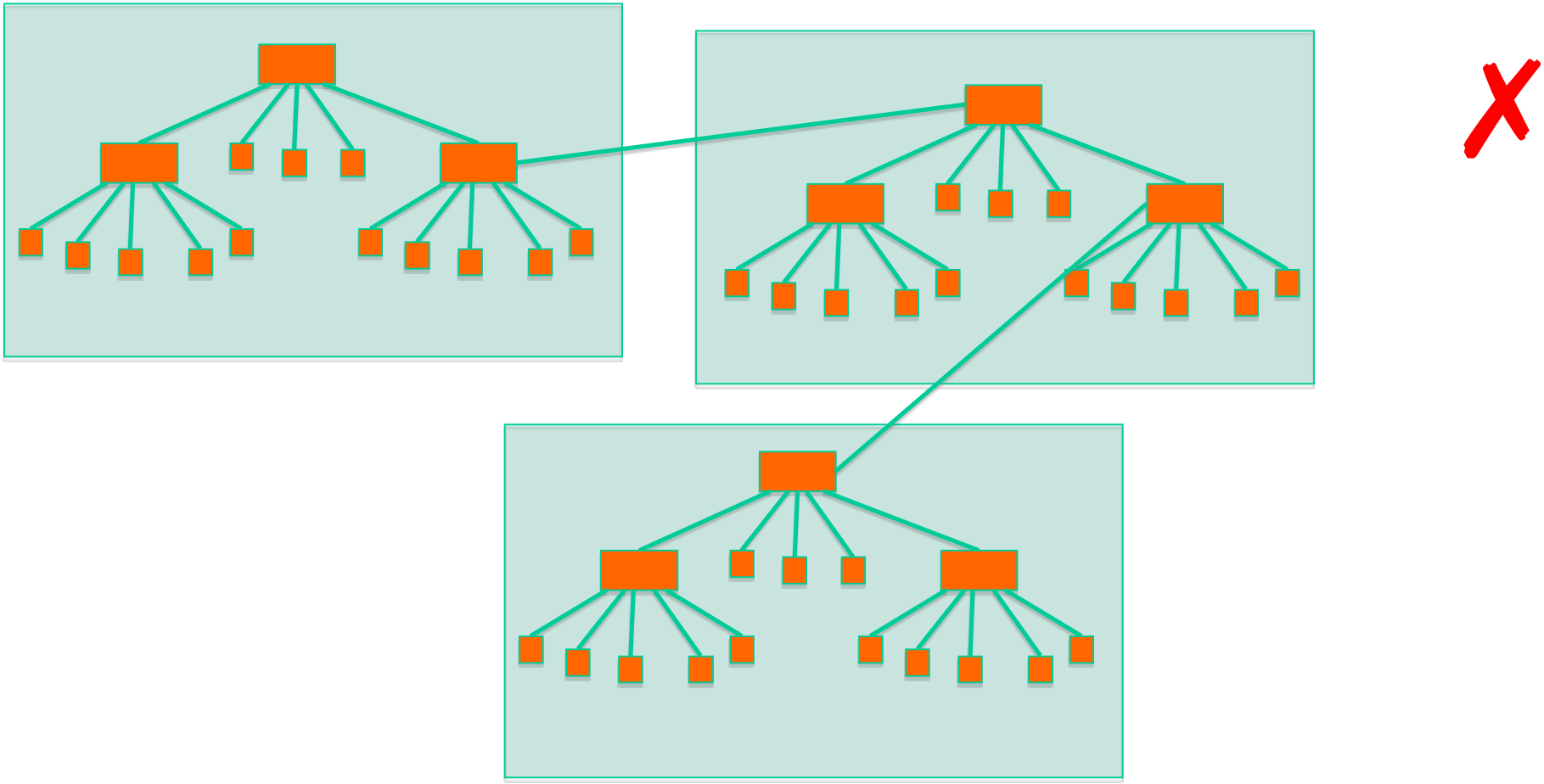

Connect buildings hierarchically

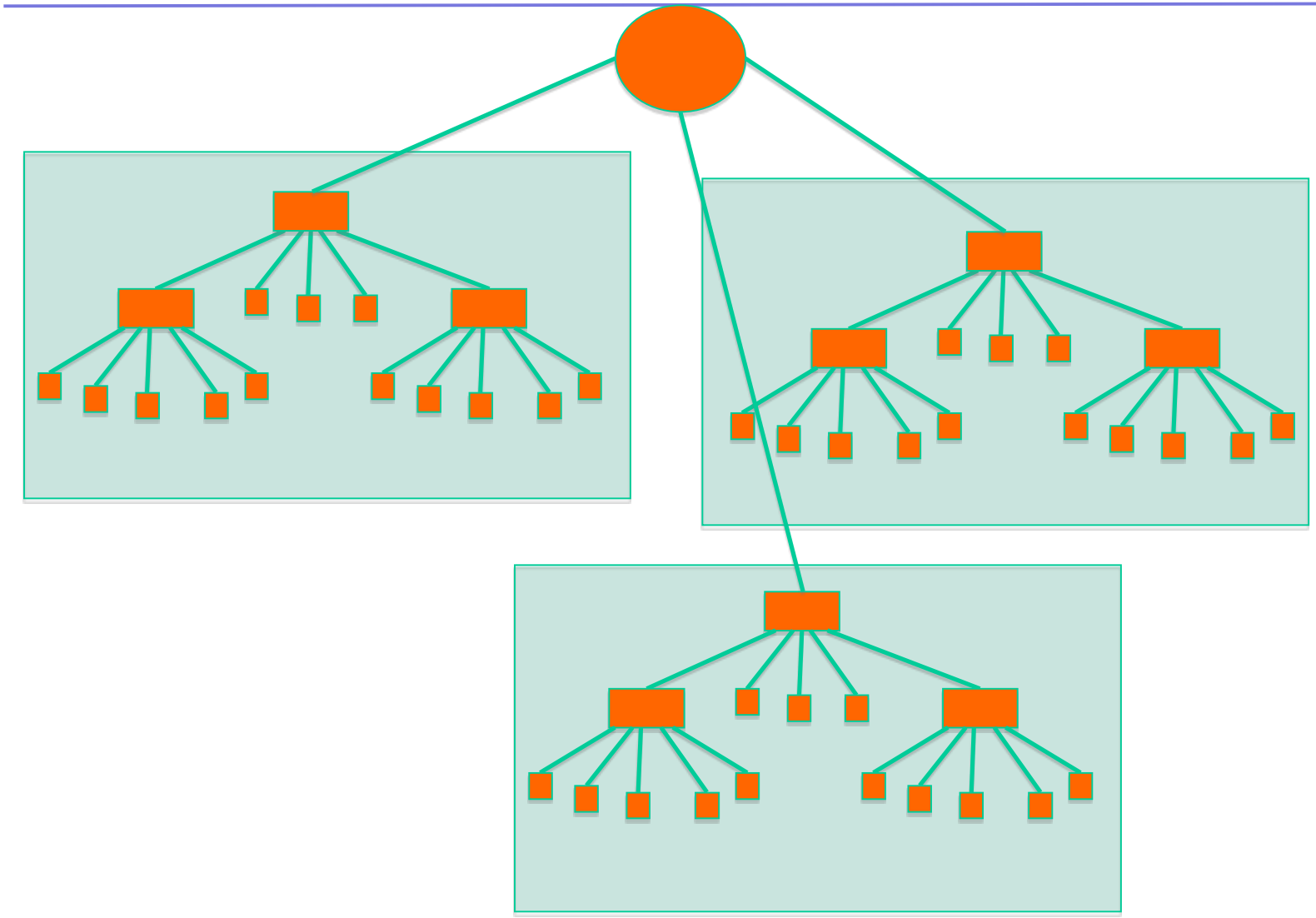

✔

Virtual LANs (VLANs)

- Allow us to split switches into separate (virtual) switches
- Only members of a VLAN can see that VLAN's traffic
  - Inter-vlan traffic must go through a router

VLAN introduction

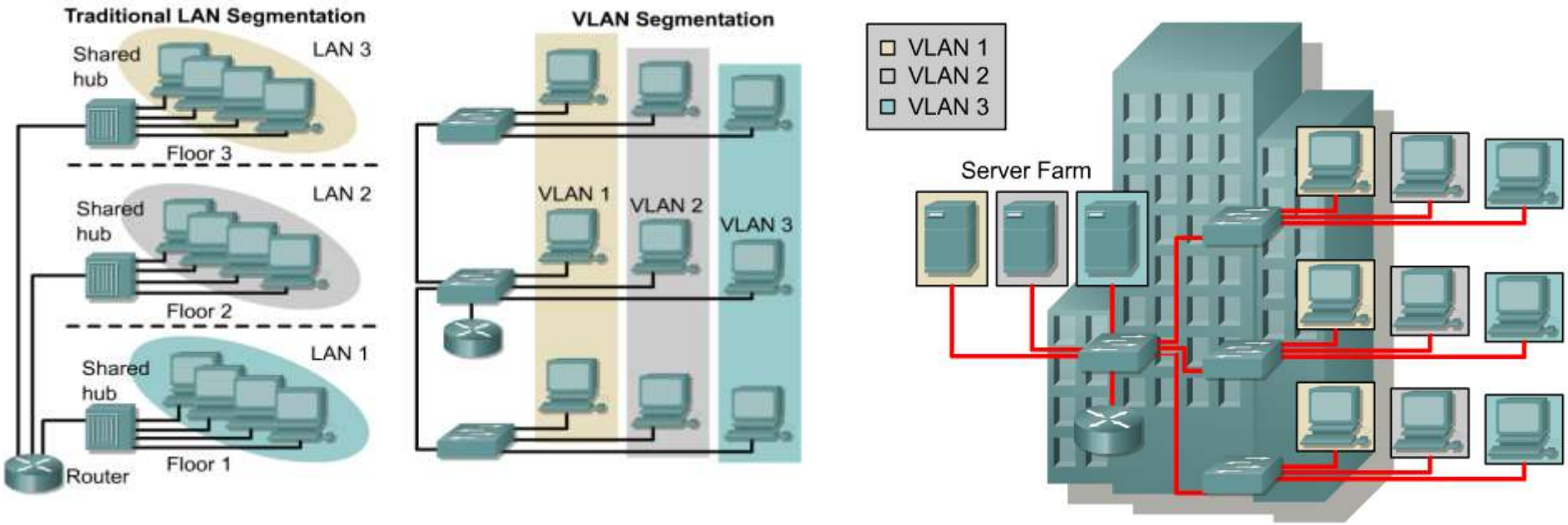

- **VLANs provide segmentation based on broadcast domains.**
- VLANs logically segment switched networks based on the functions, project teams, or applications of the organization regardless of the physical location or connections to the network.
- All workstations and servers used by a particular workgroup share the same VLAN, regardless of the physical connection or location.

Local VLANs

- 2 VLANs or more within a single switch
- VLANs address scalability, security, and network management. Routers in VLAN topologies provide broadcast filtering, security, and traffic flow management.
- ***Edge ports***, where end nodes are connected, are configured as members of a VLAN
- The switch behaves as several virtual switches, sending traffic only within VLAN members.
- Switches may not bridge any traffic between VLANs, as this would violate the integrity of the VLAN broadcast domain.
- Traffic should only be routed between VLANs.

Local VLANs

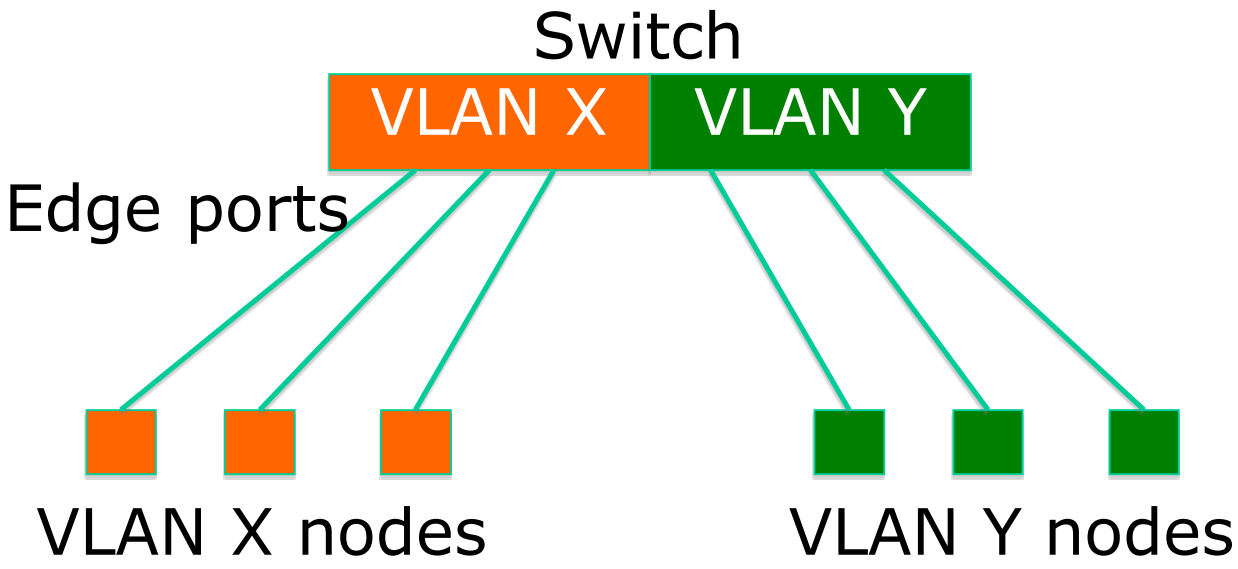

Broadcast domains with VLANs and routers

Without VLANs:

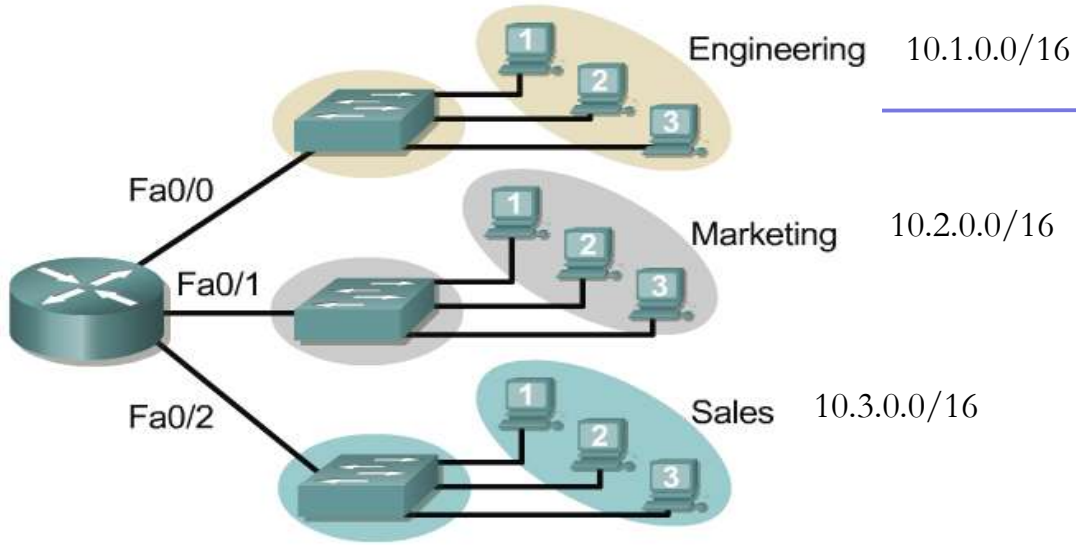

- Without VLANs, each group is on a different IP network and on a different switch.
- Using VLANs. Switch is configured with the ports on the appropriate VLAN. Still, each group on a different IP network; however, they are all on the same switch.
- What are the broadcast domains in each?

With VLANs

One link per VLAN or a single VLAN Trunk (later)

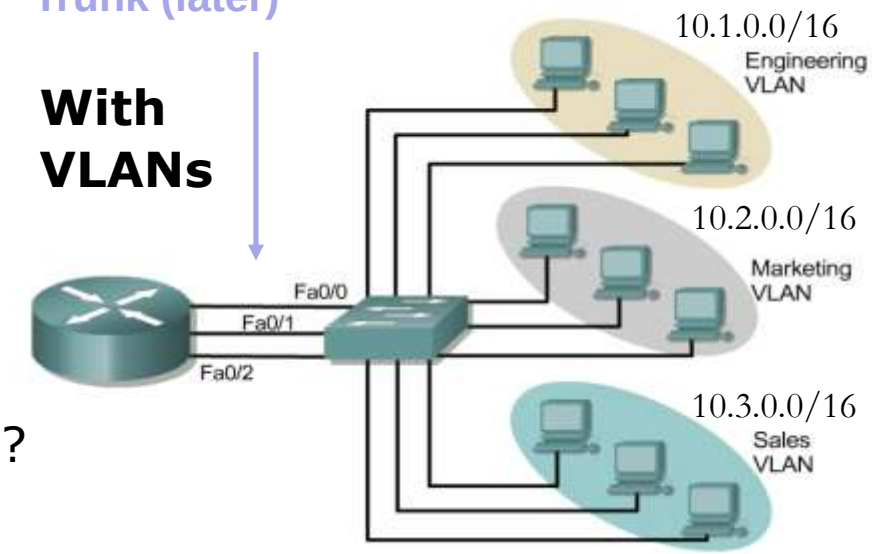

VLANs

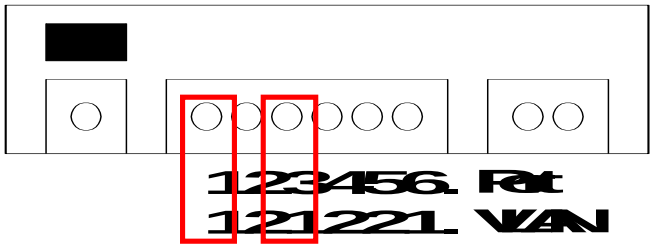

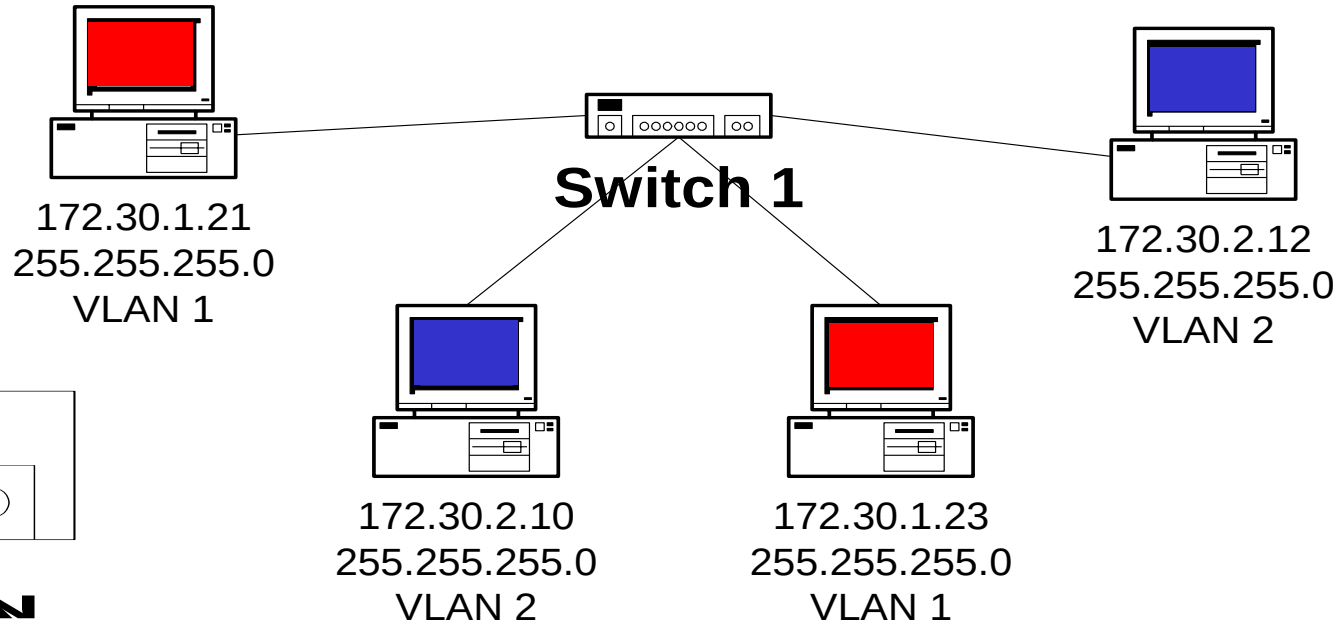

Two **VLANs** = Two **subnets**

Important notes on VLANs:

- VLANs are assigned to switch ports. There is no "VLAN" assignment done on the host (usually).
- In order for a host to be a part of that VLAN, it must be assigned an IP address that belongs to the proper subnet. *Remember:* ***VLAN = Subnet***

VLANs

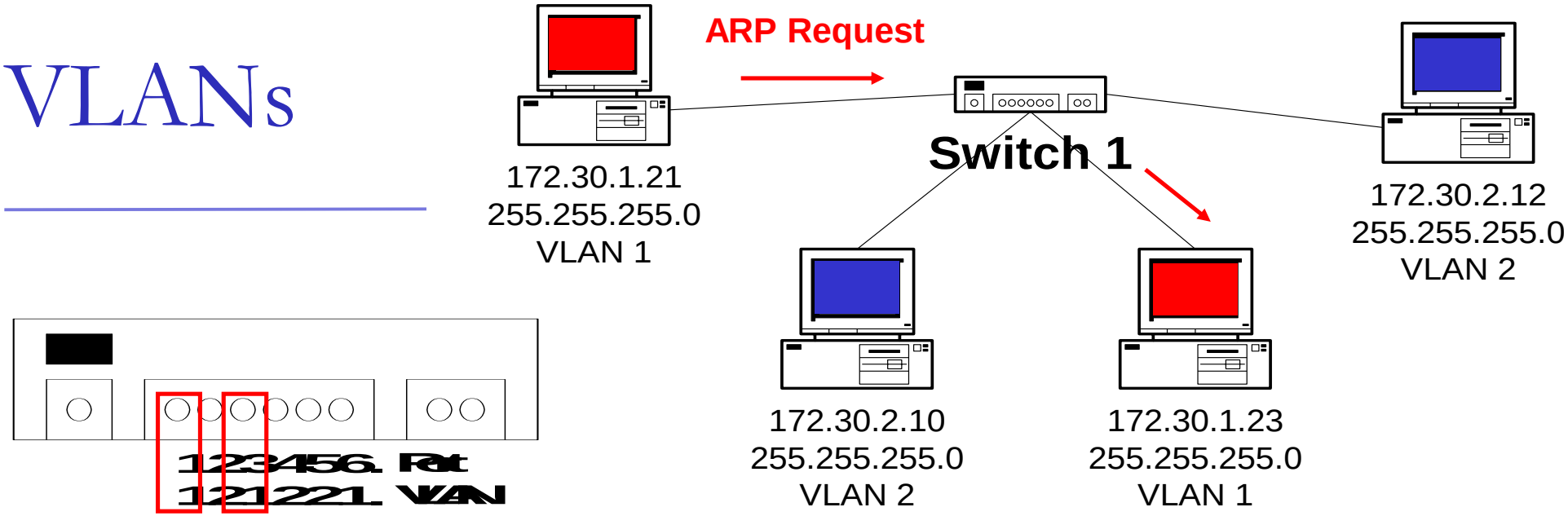

Two **VLANs** = Two **subnets**

- VLANs separate broadcast domains!
  e.g. without VLAN the ARP would be seen on all subnets.
- Assigning a host to the correct VLAN is a 2-step process:
  - Connect the host to the correct port on the switch.
  - Assign to the host the correct IP address depending on the VLAN membership

VLAN operation

- As a device enters the network, it automatically assumes the VLAN membership of the port to which it is attached.
- The default VLAN for every port in the switch is VLAN 1 and cannot be deleted.
  (This statement does not give the whole story. More in the lab later for interested groups…)
- All other ports on the switch may be reassigned to alternate VLANs.

VLANs across switches

- Two switches can exchange traffic from one or more VLANs
- Inter-switch links are configured as ***trunks***, carrying frames from all or a subset of a switch's VLANs
- Each frame carries a ***tag*** that identifies which VLAN it belongs to

VLANs across switches

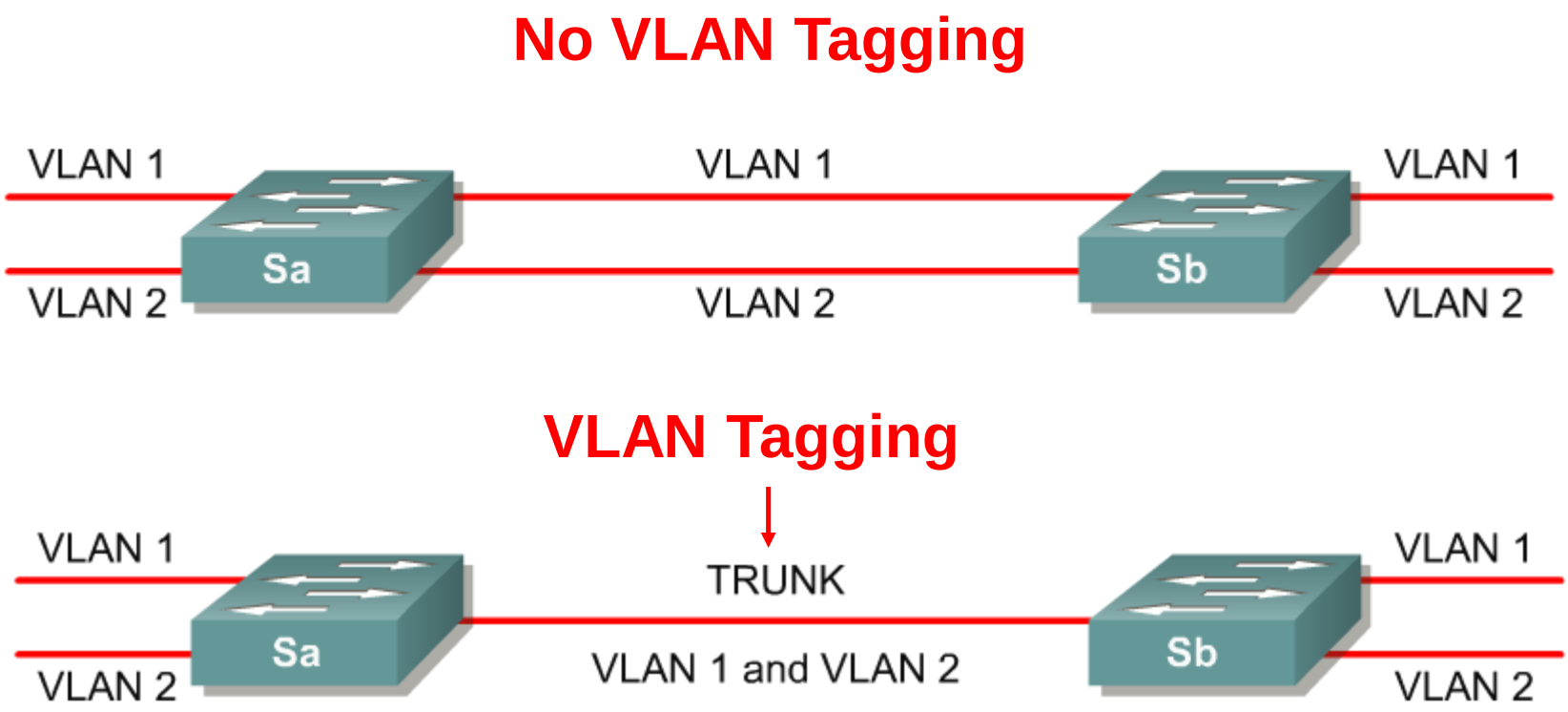

- VLAN tagging is used when a single link needs to carry traffic for more than one VLAN.

VLANs across switches

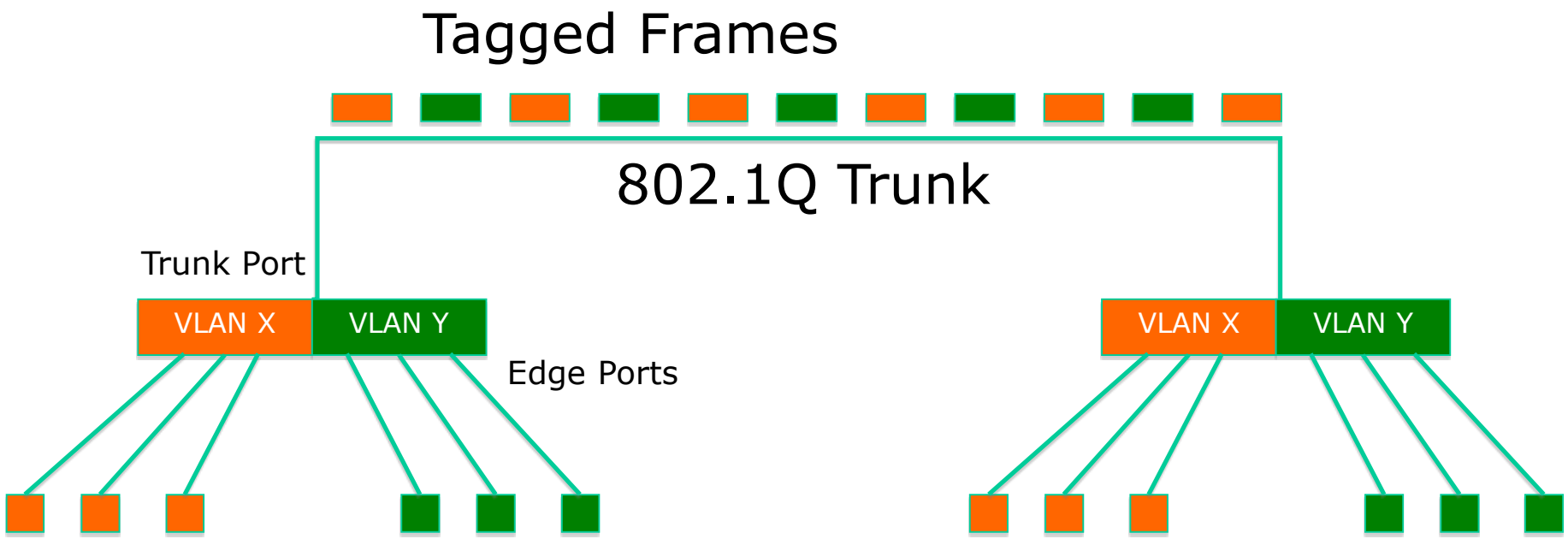

This is called “VLAN Trunking”

802.1Q

- The IEEE standard that defines how ethernet frames should be ***tagged*** when moving across switch trunks
- This means that switches from *different vendors* are able to exchange VLAN traffic.

802.1Q tagged frame

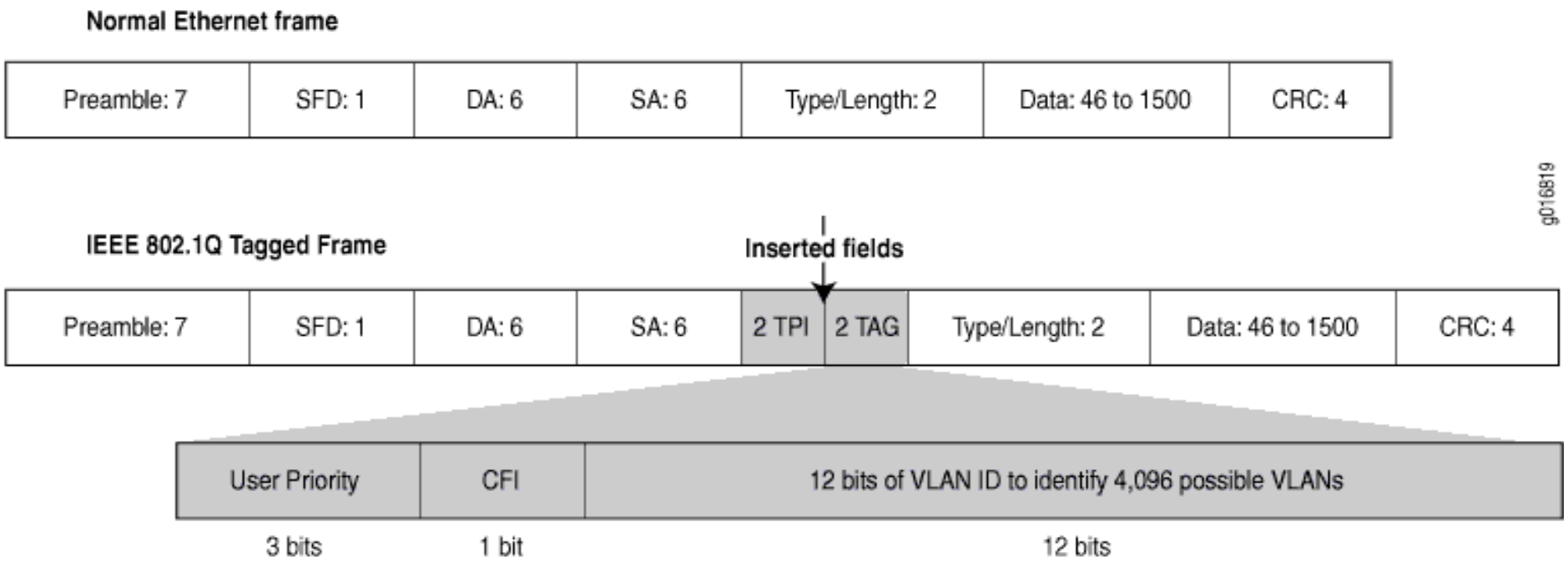

Tagged vs. Untagged

- Edge ports are not tagged, they are just "members" of a VLAN
- You only need to tag frames in switch-to-switch links (trunks), when transporting multiple VLANs
- A trunk can transport both tagged and untagged VLANs
  - As long as the two switches agree on how to handle those

VLANS increase complexity

- You can no longer “just replace” a switch
  - Now you have VLAN configuration to maintain
  - Field technicians need more skills
- You have to make sure that all the switch-to-switch trunks are carrying all the necessary VLANs
  - Need to keep in mind when adding/removing VLANs

Good reasons to use VLANs

- You want to segment your network into multiple subnets, but can’t buy enough switches
  - Hide sensitive infrastructure like IP phones, building controls, etc.
- Separate control traffic from user traffic
  - Restrict who can access your switch management address

Bad reasons to use VLANs

- Because you can, and you feel cool ☺
- Because they will completely secure your hosts (or so you think)
- Because they allow you to extend the same IP network over multiple separate buildings

Do not build "VLAN spaghetti"

- Extending a VLAN to multiple buildings across trunk ports
- Bad idea because:
  - Broadcast traffic is carried across all trunks from one end of the network to another
  - Broadcast storm can spread across the extent of the VLAN
  - <u>Maintenance and troubleshooting nightmare</u>

Configuring static VLANs

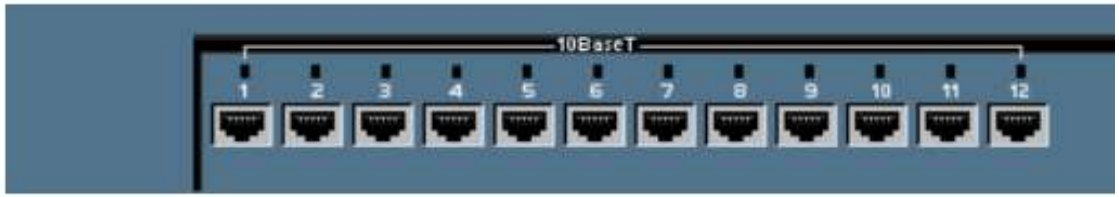

- VLAN 1 is one of the factory-default VLANs.
- Configure VLANs:

```
Switch#conf t
Switch(config)#interface vlan 10
Switch(config-if)#ip address x.x.x.x m.m.m.m
```

Creating VLANs

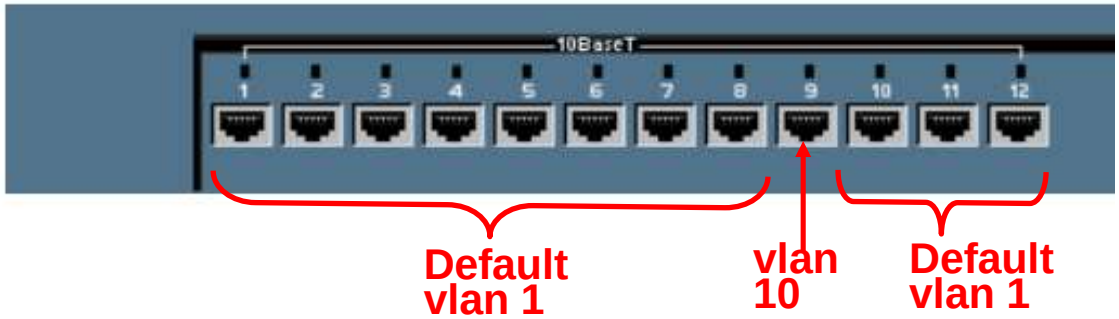

- Create the VLAN:

```
Switch#vlan database
Switch(vlan)#vlan vlan_number
Switch(vlan)#exit
```

- Assign ports to the VLAN (in configuration mode):

```
Switch(config)#interface fastethernet 0/9
Switch(config-if)#switchport access vlan 10
```

  - **access** – Denotes this port as an access port and not a trunk

Verifying VLANs – show vlan-switch

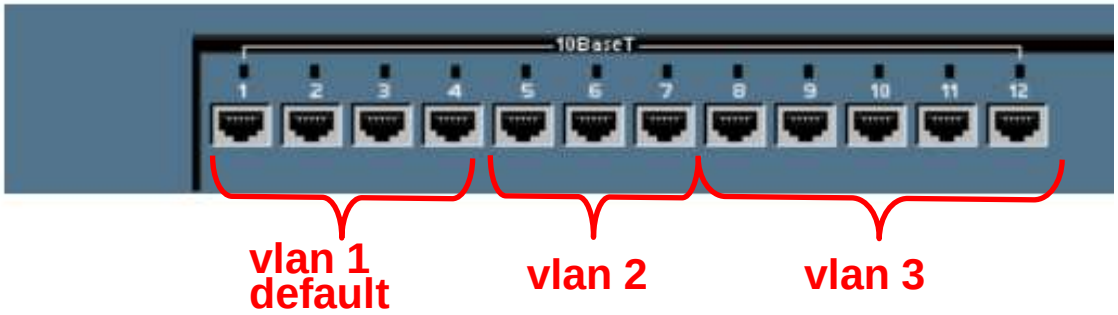


```
SydneySwitch# show vlan-switch

VLAN Name                             Status    Ports
---- -------------------- ------- -------------------------------

VLAN Name                             Status    Ports
---- -------------------- ------- ------------------------------
1    default                          active    Fa0/1, Fa0/2, Fa0/3, Fa0/4
2    VLAN2                            active    Fa0/5, Fa0/6, Fa0/7
3    VLAN3                            active    Fa0/8, Fa0/9, Fa0/10, Fa0/11,
                                                Fa0/12
1002 fddi-default                     active
1003 token-ring-default               active
1004 fddinet-default                  active
1005 trnet-default                    active

VLAN Type  SAID MTU   Parent RingNo BridgeNo Stp BrdgMode Trans1 Trans2
---- ----- ---- ---- ------ ------ -------- ----------- ------ ------
```

show vlan-switch brief

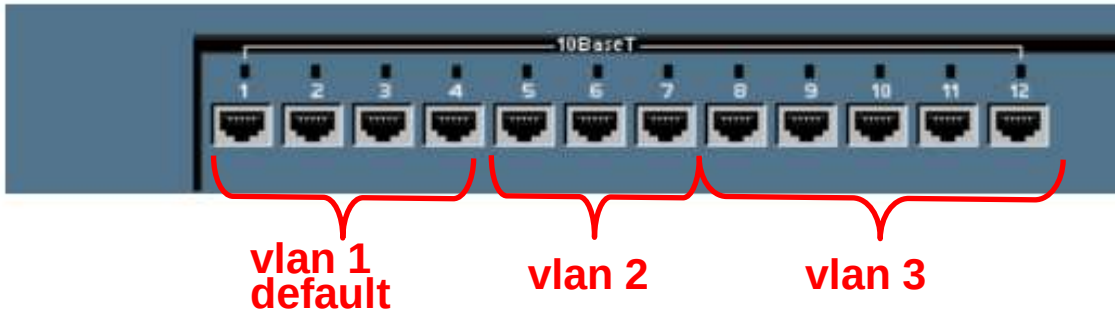


```
SydneySwitch# show vlan-switch brief

VLAN Name                             Status    Ports
---- -------------------------------- --------- -------------------------------
1    default                          active    Fa0/1, Fa0/2, Fa0/3, Fa0/4
2    VLAN2                            active    Fa0/5, Fa0/6, Fa0/7
3    VLAN3                            active    Fa0/8, Fa0/9, Fa0/10, Fa0/11,
                                               Fa0/12
1002 fddi-default                     active
1003 token-ring-default               active
1004 fddinet-default                  active
1005 trnet-default                    active
```

vlan database commands

- Optional Command to add, delete, or modify VLANs.
- VLAN names, numbers, and **VTP** (VLAN Trunking Protocol) information can be entered which "may" affect other switches besides this one. (Not part of this module)
- This does not assign any VLANs to an interface.

```
Switch#vlan database
Switch(vlan)#?
VLAN database editing buffer manipulation commands:
  abort  Exit mode without applying the changes
  apply  Apply current changes and bump revision number
  exit   Apply changes, bump revision number, and exit mode
  no     Negate a command or set its defaults
  reset  Abandon current changes and reread current database
  show   Show database information
  vlan   Add, delete, or modify values associated with a single VLAN
  vtp    Perform VTP administrative functions.
```

VLAN trunking

- To configure 802.1q trunking switch/router, first determine which ports on the switches will be used to connect the two switches together.
- Then in the Global configuration mode enter the following commands on both switches:

```
Switch_A(config)#interface fastethernet
                interface ifnumber

Switch_A(config-if)#switchport trunk
                encapsulation dot1q
```

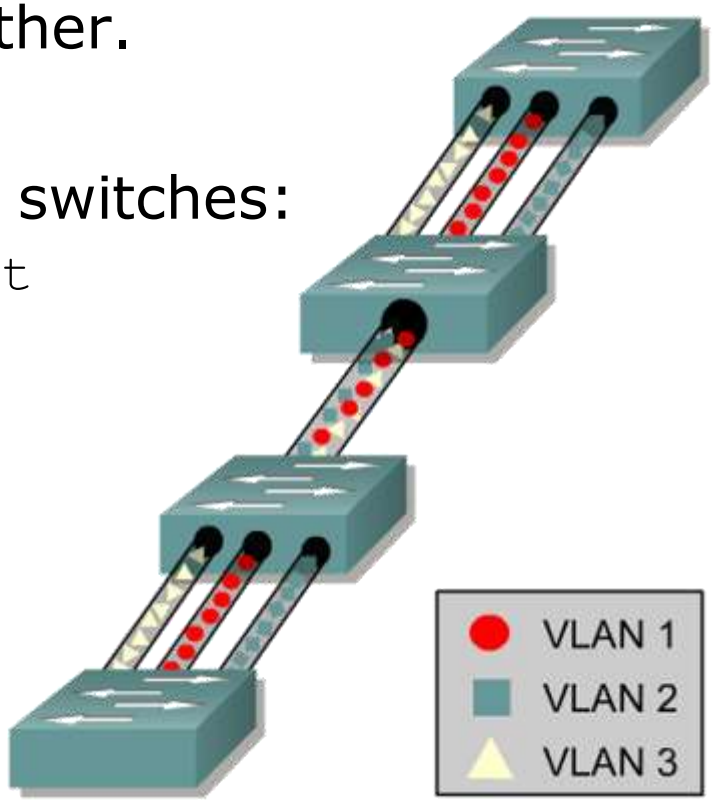

Deleting a Port VLAN Membership

```
SydneySwitch#config terminal
SydneySwitch(config)#interface fastethernet 0/9
SydneySwitch(config-if)#switchport access vlan 300
SydneySwitch(config-if)#exit
SydneySwitch(config)#exit
```

```
Switch(config)#interface fastethernet 0/9
Switch(config-if)#no switchport access vlan 300
```

Switch(config-if)#**no switchport access vlan** ***vlan_number***

Deleting a VLAN

Switch#**vlan database**

Switch(vlan)#**no vlan** *vlan_number*

Switch(vlan)#**exit**

Link Aggregation

Link Aggregation

- Also known as *port bundling, link bundling*
- You can use multiple links in parallel as a single, logical link
  - For increased capacity
  - For redundancy (fault tolerance)
- LACP (Link Aggregation Control Protocol) is a standardized method of negotiating these bundled links between switches

LACP Operation

- Two switches connected via multiple links will send LACPDU packets, identifying themselves and the port capabilities
- They will then automatically build the logical aggregated links, and then pass traffic.
- Switch ports can be configured as active or passive

LACP Operation

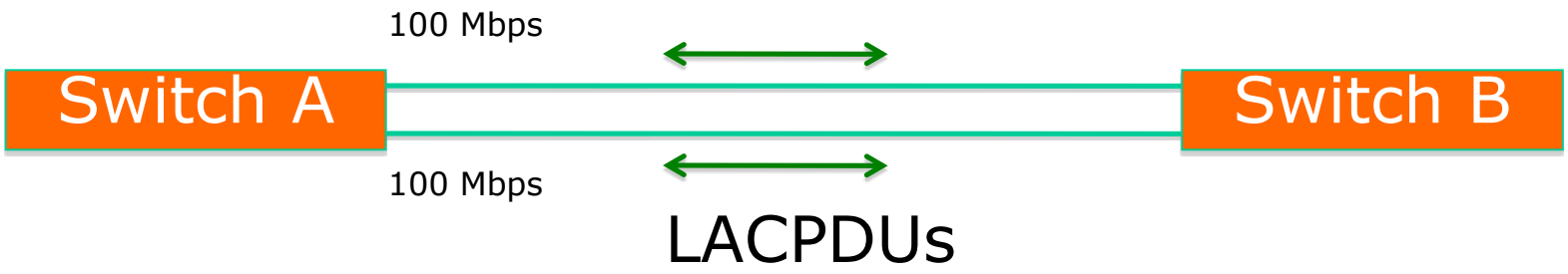

- Switches A and B are connected to each other using two sets of Fast Ethernet ports
- LACP is enabled and the ports are turned on
- Switches start sending LACPDUs, then negotiate how to set up the aggregation

LACP Operation

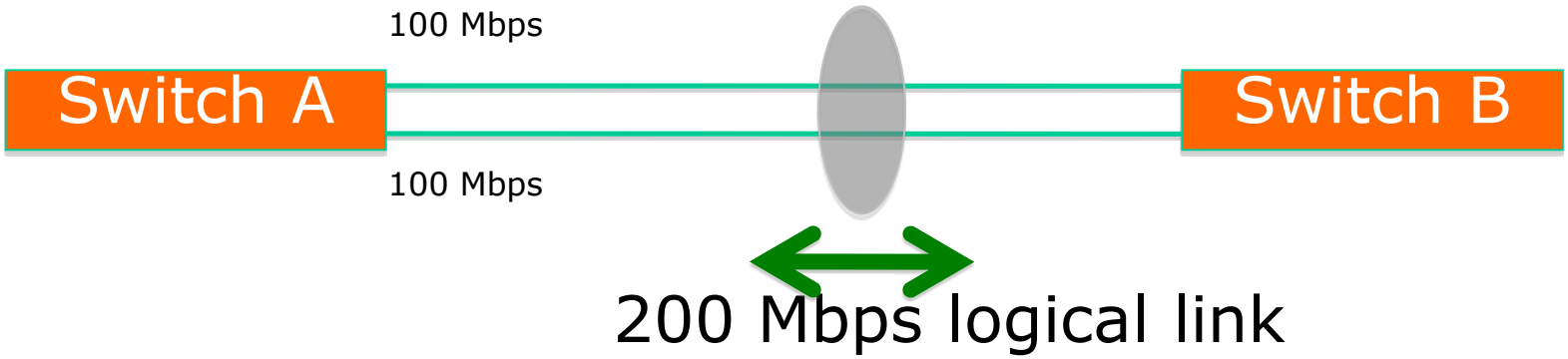

- The result is an aggregated 200 Mbps logical link
- The link is also fault tolerant: If one of the member links fail, LACP will automatically take that link off the bundle, and keep sending traffic over the remaining link

Distributing Traffic in Bundled Links

- Bundled links distribute frames using a hashing algorithm, based on:
  - Source and/or Destination MAC address
  - Source and/or Destination IP address
  - Source and/or Destination Port numbers
- This can lead to unbalanced use of the links, depending on the nature of the traffic
- Always choose the load-balancing method that provides the most distribution

Switching Loops

Switching Loop

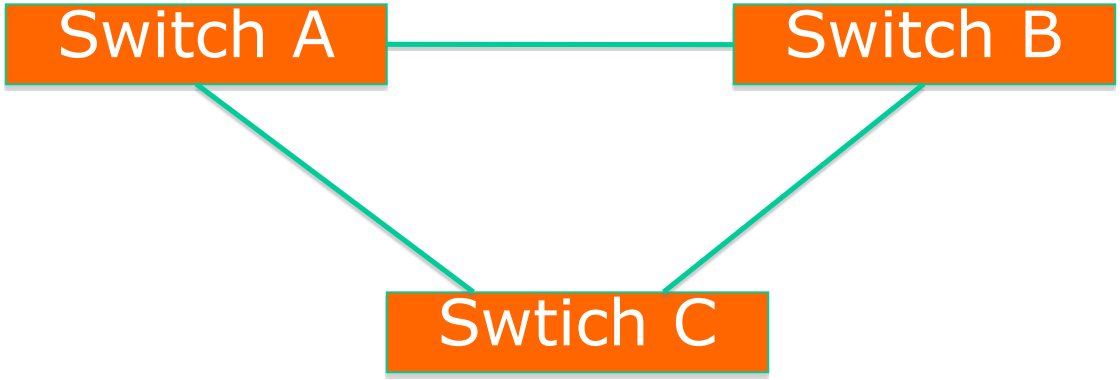

- When there is more than one path between two switches
- What are the potential problems?

Switching Loop

- If there is more than one path between two switches:
  - Forwarding tables become unstable
    - Source MAC addresses are repeatedly seen coming from different ports
  - Switches will broadcast each other's broadcasts
    - All available bandwidth is utilized
    - Switch processors cannot handle the load

Switching Loop

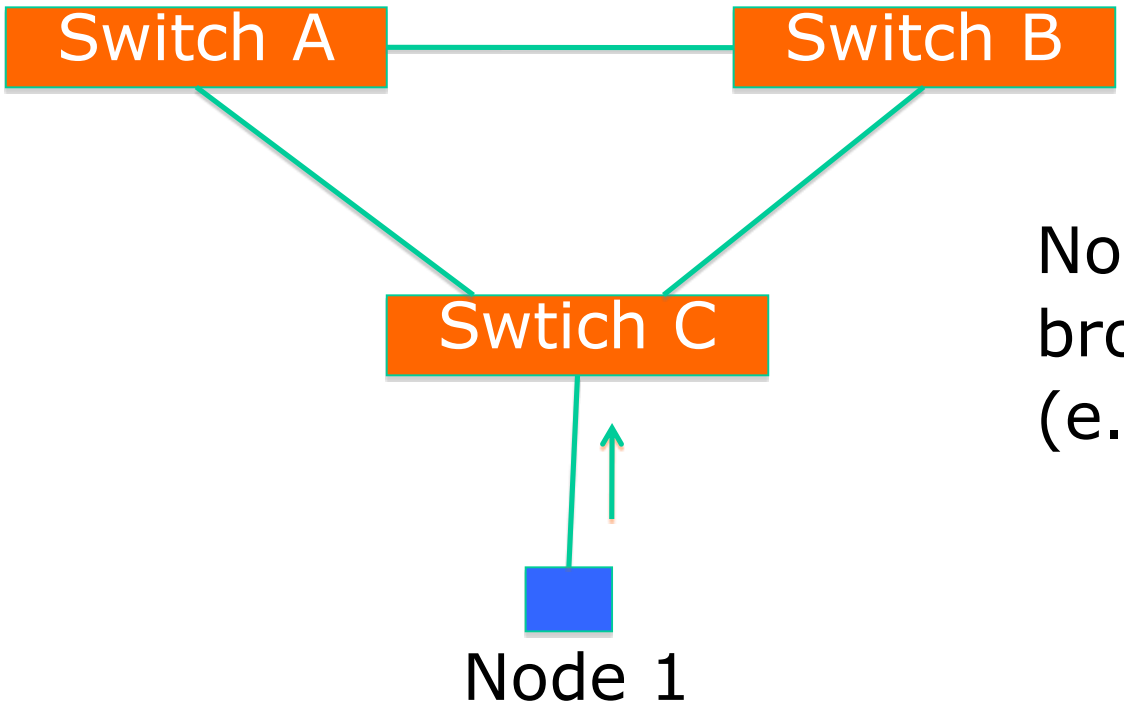

Node1 sends a broadcast frame (e.g. an ARP request)

Switching Loop

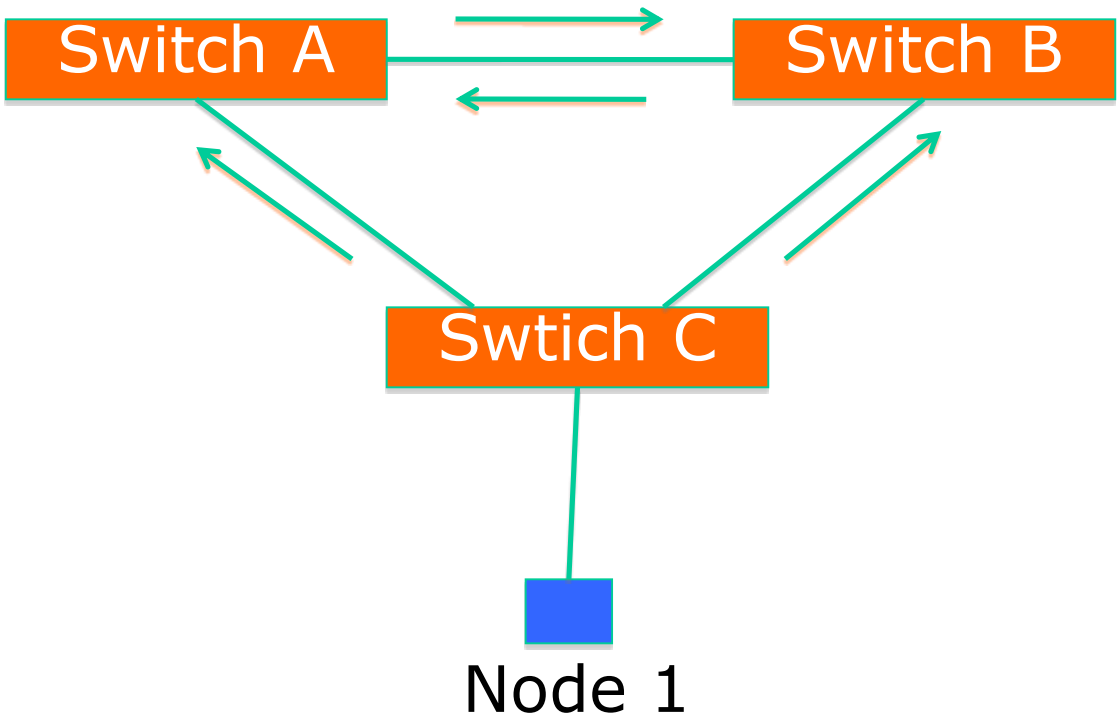

Switches A, B and C broadcast node 1's frame out every port

Switching Loop

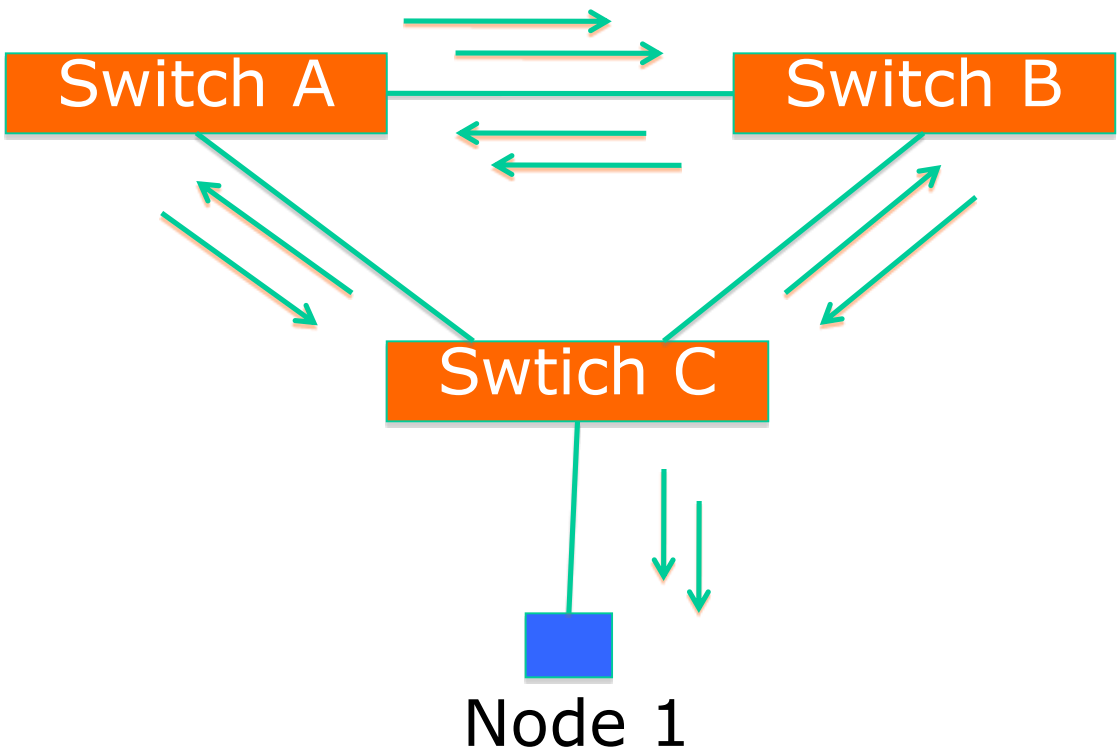

But they receive each other's broadcasts, which they need to forward again out every port!

The broadcasts are amplified, creating a ***broadcast storm…***

Good Switching Loops???

- But you can take advantage of loops!
  - Redundant paths improve resilience when:
    - A switch fails
    - Wiring breaks
- How to achieve redundancy without creating dangerous traffic loops?

What is a Spanning Tree

- "Given a connected, undirected graph, a *spanning tree* of that graph is a subgraph which is a tree and connects all the vertices together".
- A single graph can have many different spanning trees.

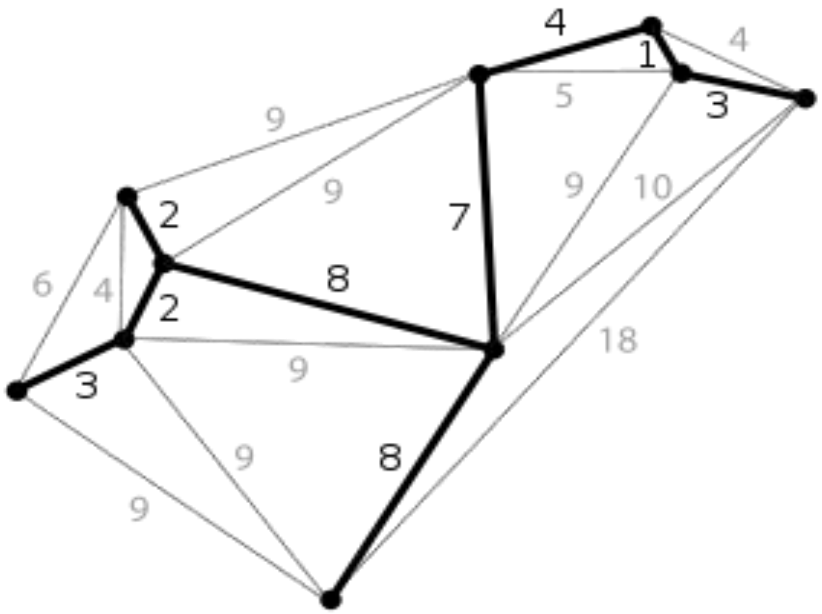

Spanning Tree Protocol

- The purpose of the protocol is to have bridges dynamically discover a subset of the topology that is loop-free (a tree) and yet has just enough connectivity so that where physically possible, there is a path between every switch

Spanning Tree Protocol

- Several flavors:
  - Traditional Spanning Tree (802.1d)
  - Rapid Spanning Tree or RSTP (802.1w)
  - Multiple Spanning Tree or MSTP (802.1s)

Traditional Spanning Tree (802.1d)

- Switches exchange messages that allow them to compute the Spanning Tree
  - These messages are called BPDUs (Bridge Protocol Data Units)
  - Two types of BPDUs:
    - Configuration
    - Topology Change Notification (TCN)

Traditional Spanning Tree (802.1d)

- First Step:
  - Decide on a point of reference: the **Root Bridge**
  - The election process is based on the Bridge ID, which is composed of:
    - The Bridge Priority: A two-byte value that is configurable
    - The MAC address: A unique, hardcoded address that cannot be changed.

Root Bridge Selection (802.1d)

- Each switch starts by sending out BPDUs with a Root Bridge ID equal to its own Bridge ID
  - *I am the root!*
- Received BPDUs are analyzed to see if a <u>lower</u> Root Bridge ID is being announced
  - If so, each switch replaces the value of the advertised Root Bridge ID with this new lower ID
- Eventually, they all agree on who the Root Bridge is

Root Bridge Selection (802.1d)

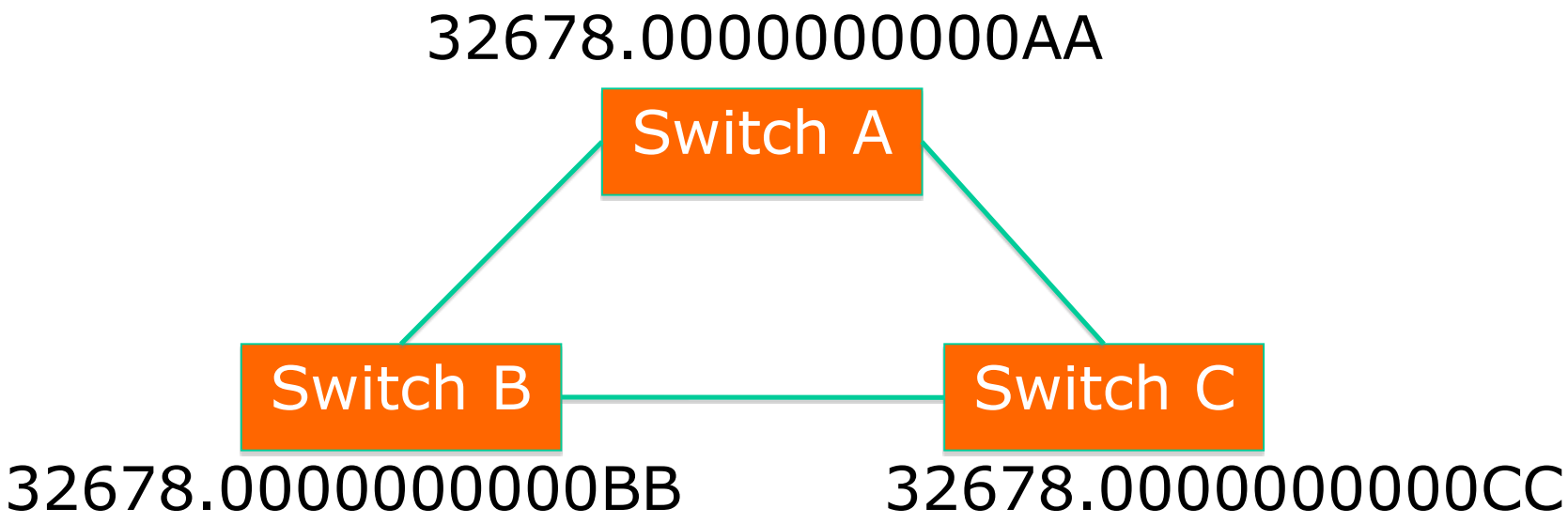

- All switches have the same priority.
- Who is the elected root bridge?

Root Port Selection (802.1d)

- Now each switch needs to figure out where it is in relation to the Root Bridge
  - Each switch needs to determine its **Root Port**
  - The key is to find the port with the lowest **Root Path Cost**
    - The cumulative cost of all the links leading to the Root Bridge

Root Port Selection (802.1d)

- Each link on a switch has a **Path Cost**
  - Inversely proportional to the link speed
    e.g. the faster the link, the lower the cost

Link Speed	STP Cost
10 Mbps	100
100 Mbps	19
1 Gbps	4
10 Gbps	2

Root Port Selection (802.1d)

- **Root Path Cost** is the accumulation of a link's Path Cost and the Path Costs learned from neighboring Switches.
  - It answers the question: How much does it cost to reach the Root Bridge through this port?

Root Port Selection (802.1d)

1. Root Bridge sends out BPDUs with a Root Path Cost value of 0
2. Neighbor receives BPDU and adds port's Path Cost to Root Path Cost received
3. Neighbor sends out BPDUs with new cumulative value as Root Path Cost
4. Other neighbor's down the line keep adding in the same fashion

Root Port Selection (802.1d)

- On each switch, the port where the lowest Root Path Cost was received becomes the ***Root Port***
  - This is the port with the best path to the Root Bridge

Root Port Selection (802.1d)

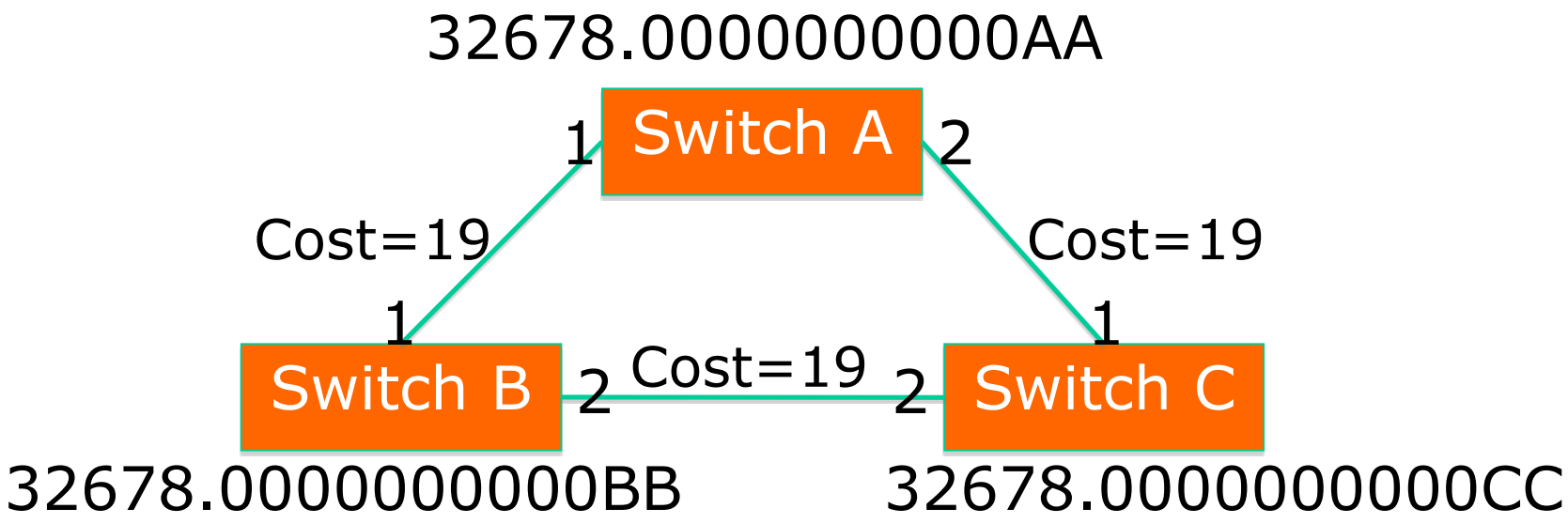

- What is the Path Cost on each Port?
- What is the Root Port on each switch?

Root Port Selection (802.1d)

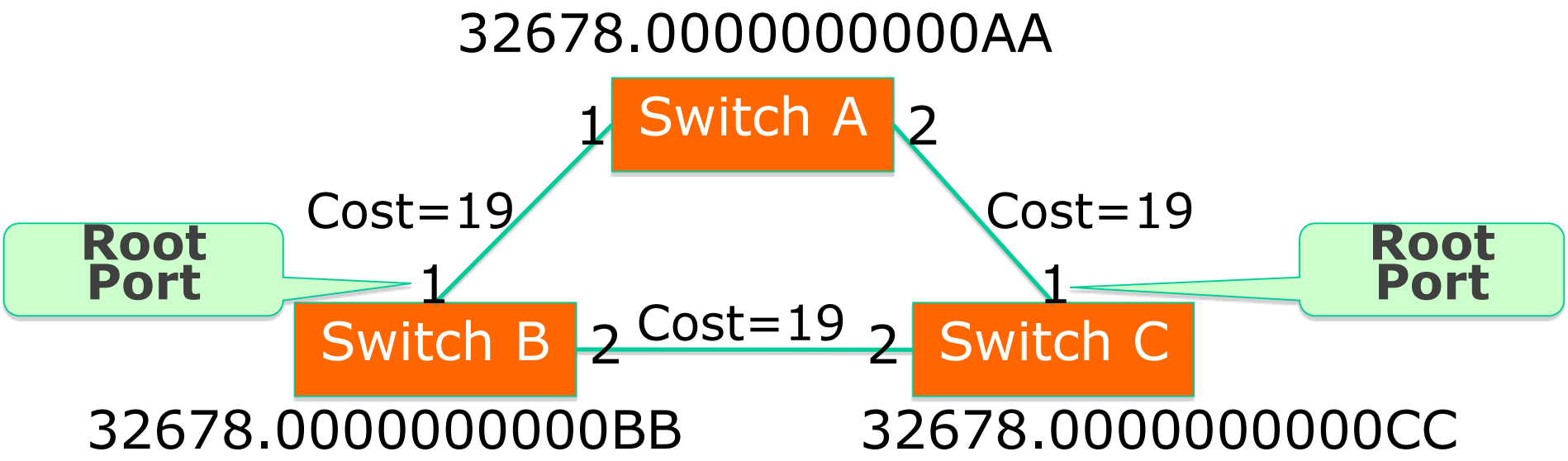

Electing Designated Ports (802.1d)

- OK, we now have selected root ports but we haven't solved the loop problem yet, have we?The links are still active!
- Each network segment needs to have only one switch forwarding traffic to and from that segment
- Switches then need to identify one ***Designated Port*** per link
  - The one with the lowest cumulative Root Path Cost to the Root Bridge

Root Port Selection (802.1d)

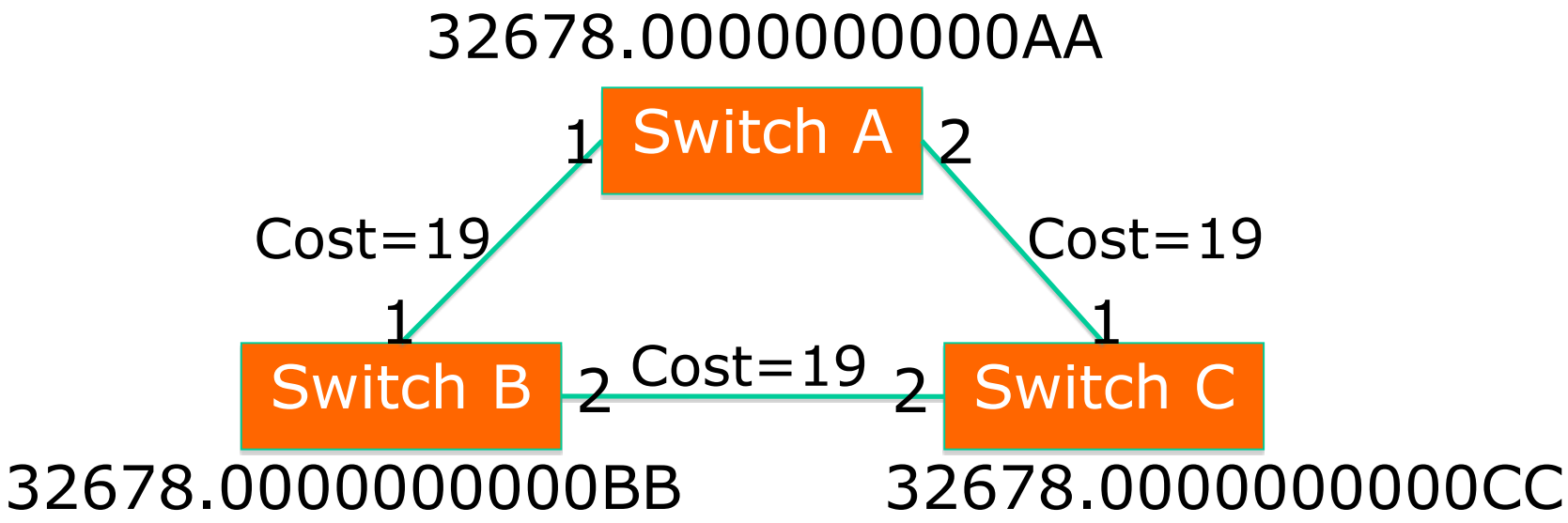

Which port should be the Designated Port on each segment?

Electing Designated Ports (802.1d)

- Two or more ports in a segment having identical Root Path Costs is possible, which results in a tie condition
- All STP decisions are based on the following sequence of conditions:
  - Lowest Root Bridge ID
  - Lowest Root Path Cost to Root Bridge
  - Lowest Sender Bridge ID
  - Lowest Sender Port ID

Root Port Selection (802.1d)

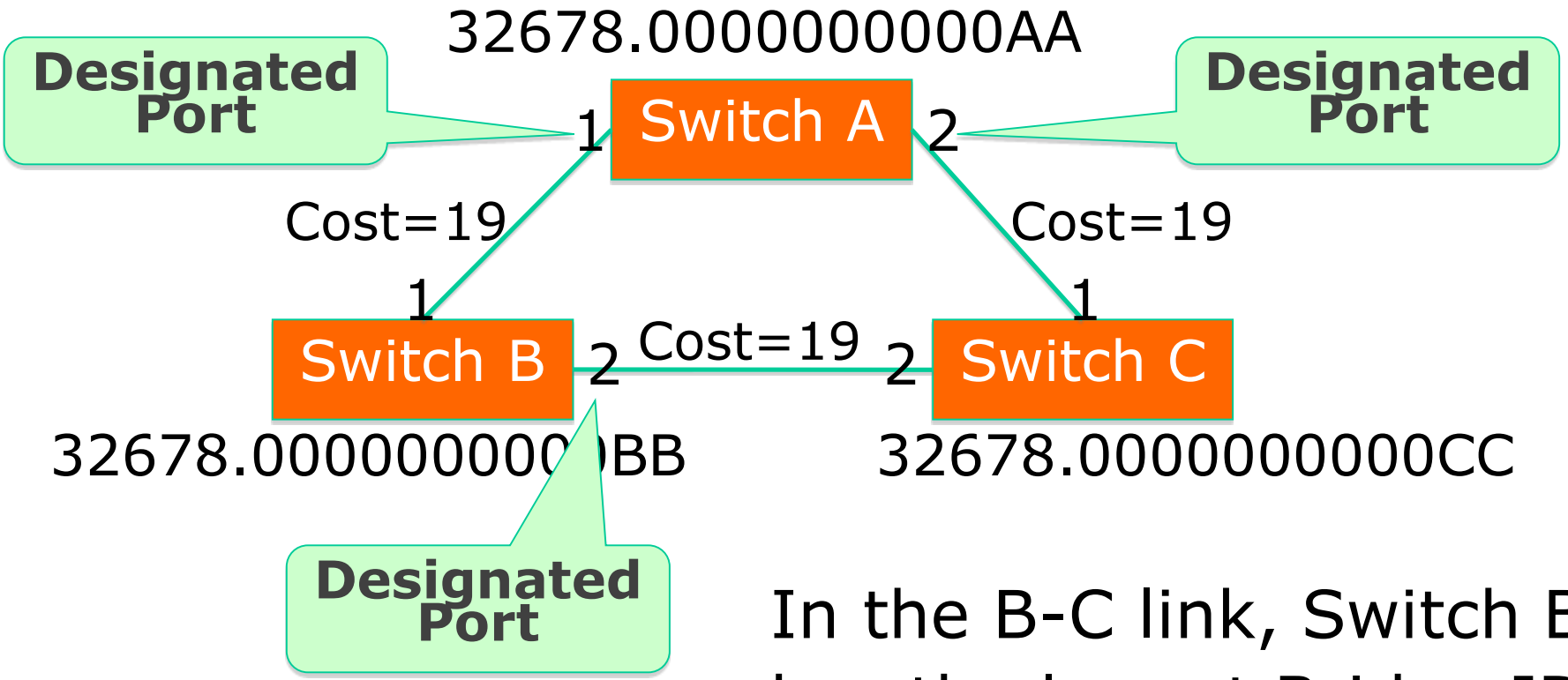

In the B-C link, Switch B has the lowest Bridge ID, so port 2 in Switch B is the Designated Port

Blocking a port

- Any port that is not elected as either a Root Port, nor a Designated Port is put into the Blocking State.
- This step effectively breaks the loop and completes the Spanning Tree.

Root Port Selection (802.1d)

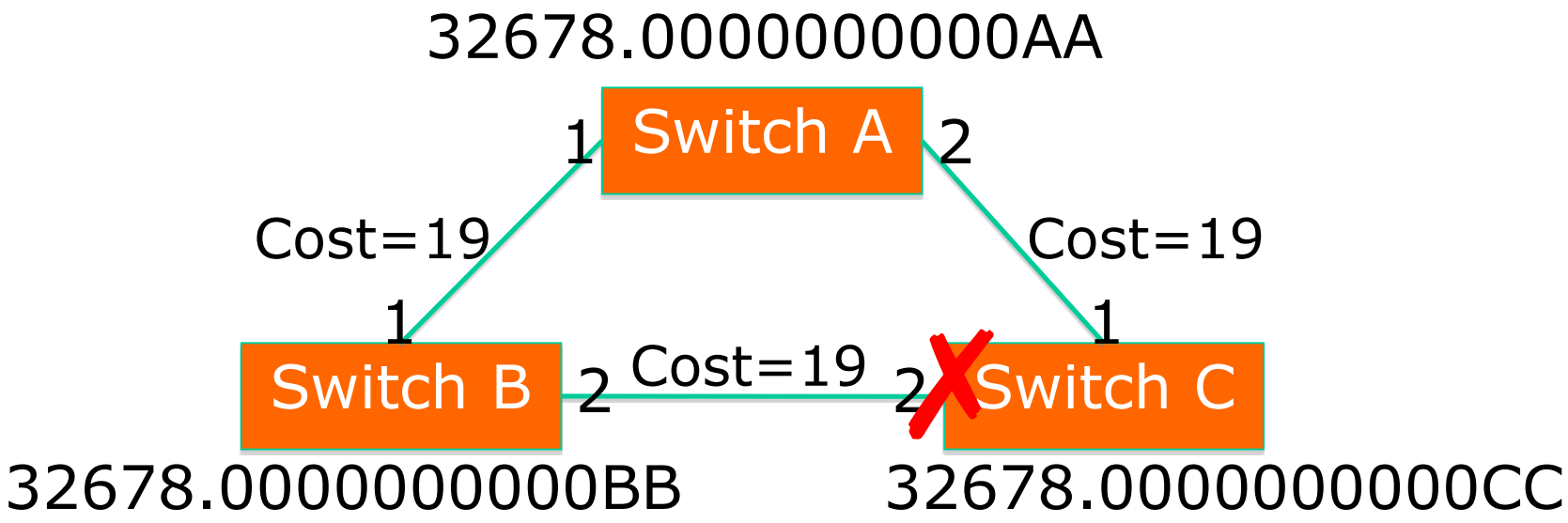

Port 2 in Switch C is put into the **Blocking State**, because it is **neither a Root Port nor a Designated Port**

Spanning Tree Protocol States

- Disabled
  - Port is shut down
- Blocking
  - Not forwarding frames
  - Receiving BPDUs
- Listening
  - Not forwarding frames
  - Sending and receiving BPDUs

Spanning Tree Protocol States

- Learning
  - Not forwarding frames
  - Sending and receiving BPDUs
  - Learning new MAC addresses
- Forwarding
  - Forwarding frames
  - Sending and receiving BPDUs
  - Learning new MAC addresses

STP Topology Changes

- Switches will recalculate if:
  - A new switch is introduced
    - It could be the new Root Bridge!
  - A switch fails
  - A link fails

Root Bridge Placement

- Using default STP parameters might result in an undesired situation
  - Traffic will flow in non-optimal ways
  - An unstable or slow switch might become the root
- You need to plan your assignment of bridge priorities carefully

Bad Root Bridge Placement

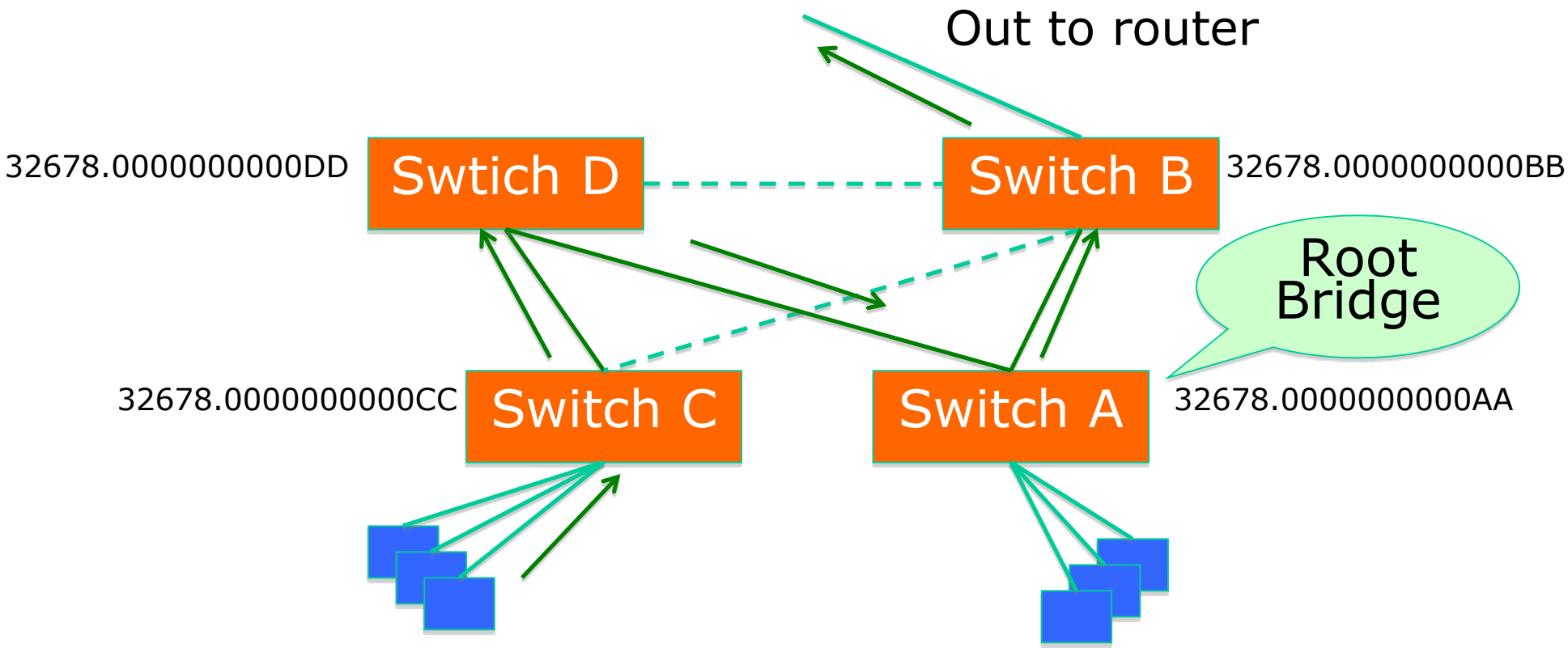

Good Root Bridge Placement

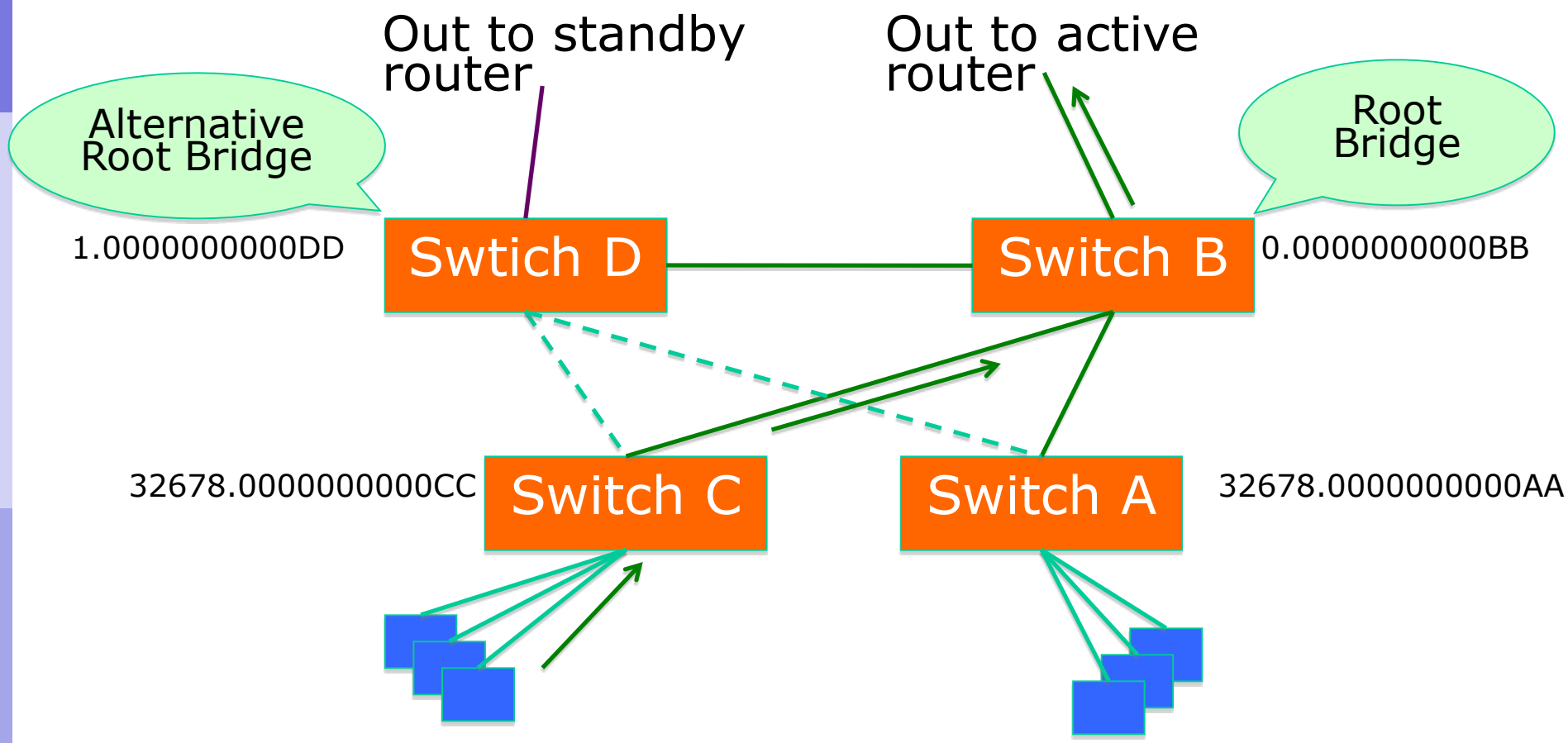

Protecting the STP Topology

- Some vendors have included features that protect the STP topology:
  - Root Guard
  - BPDU Guard
  - Loop Guard
  - UDLD
  - Etc.

STP Design Guidelines

- **Enable spanning tree** even if you don't have redundant paths
- Always plan and set bridge priorities
  - Make the root choice deterministic
  - Include an alternative root bridge
- If possible, do not accept BPDUs on end user ports

802.1d Convergence Speeds

- Moving from the Blocking state to the Forwarding State takes at least 2 x *Forward Delay* time units (~ 30 secs.)
  - This can be annoying when connecting end user stations
- Some vendors have added enhancements such as *PortFast*, which will reduce this time to a minimum for edge ports
  - Never use *PortFast* or similar in switch-to-switch links
- Topology changes typically take 30 seconds too
  - This can be unacceptable in a production network

Rapid Spanning Tree (802.1w)

- Convergence is **much** faster
  - Communication between switches is more interactive
- Edge ports don’t participate
  - Edge ports transition to forwarding state immediately
  - If BPDUs are received on an edge port, it becomes a non-edge port to prevent loops

Rapid Spanning Tree (802.1w)

- Defines these port roles:
  - Root Port (same as with 802.1d)
  - Alternate Port
    - A port with an alternate path to the root
  - Designated Port (same as with 802.1d)
  - Backup Port
    - A backup/redundant path to a segment where another bridge port already connects.

Rapid Spanning Tree (802.1w)

- Synchronization process uses a handshake method
  - After a root is elected, the topology is built in cascade, where each switch proposes to be the designated bridge for each point-to-point link
  - While this happens, all the downstream switch links are blocking

Rapid Spanning Tree (802.1w)

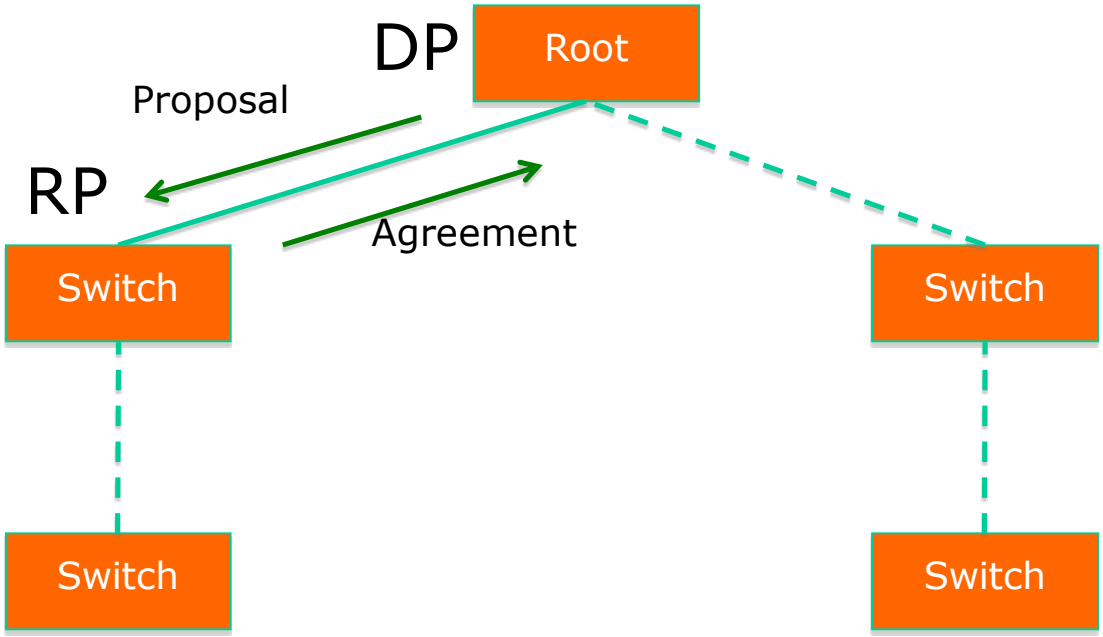

Rapid Spanning Tree (802.1w)

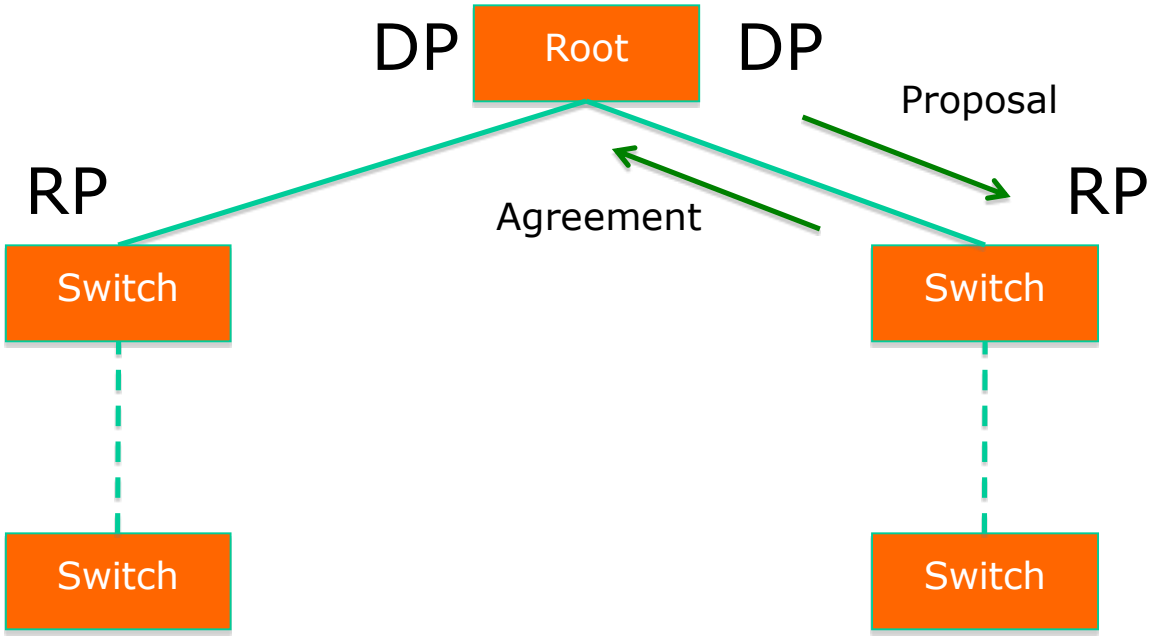

Rapid Spanning Tree (802.1w)

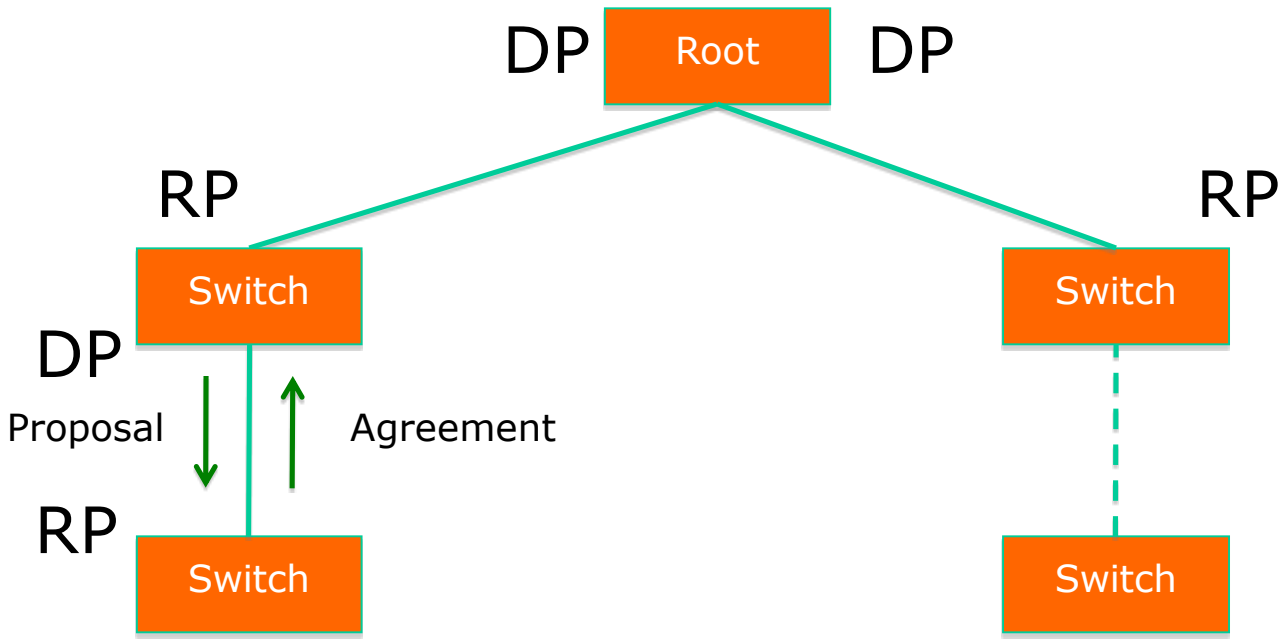

Rapid Spanning Tree (802.1w)

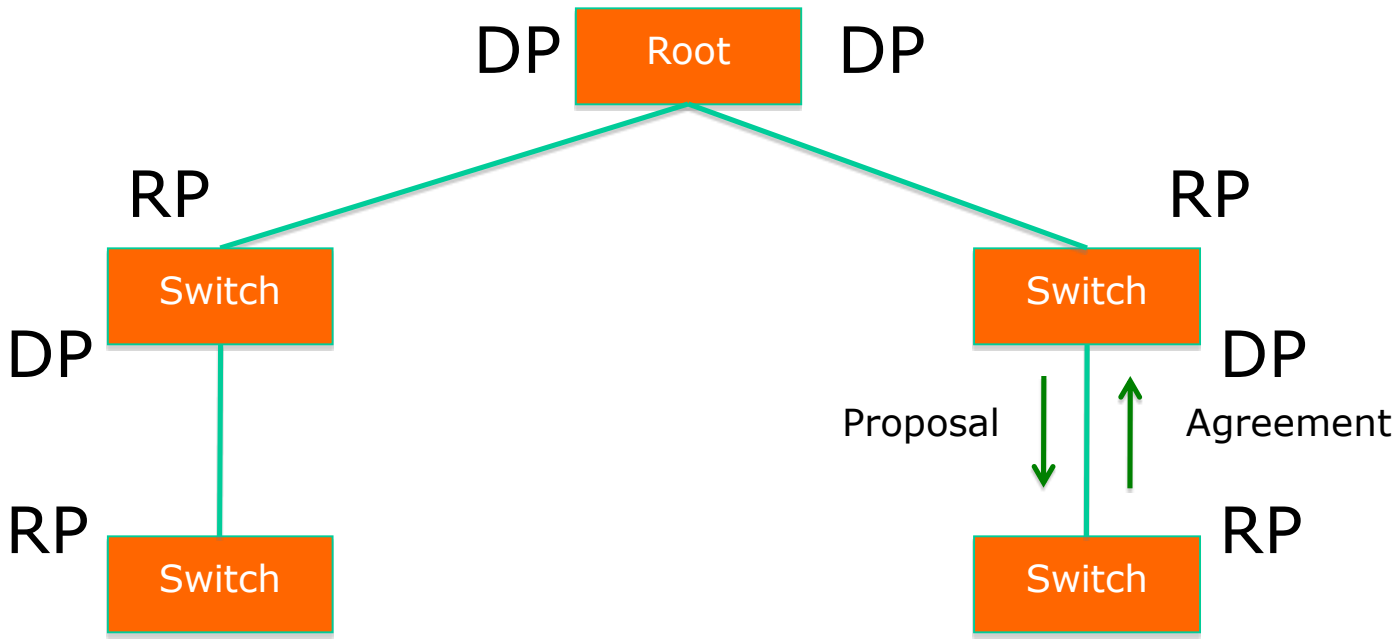

Rapid Spanning Tree (802.1w)

- Prefer RSTP over STP if you want faster convergence
- Always define which ports are edge ports

Multiple Spanning Tree (802.1s)

- Allows separate spanning trees per VLAN group
  - Different topologies allow for load balancing between links
  - Each group of VLANs are assigned to an “instance” of MST
- Compatible with STP and RSTP

Multiple Spanning Tree (802.1s)

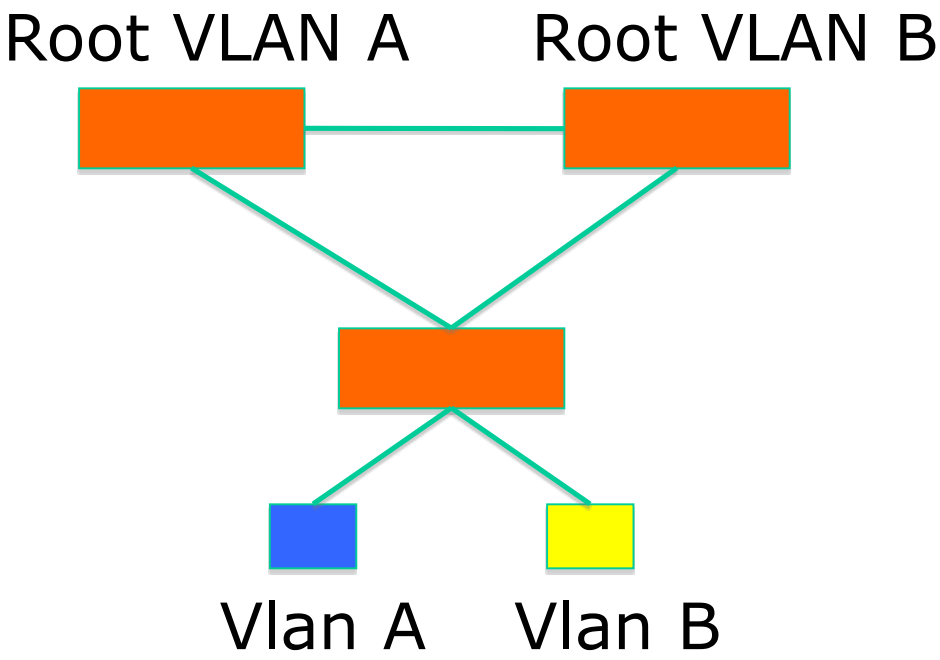

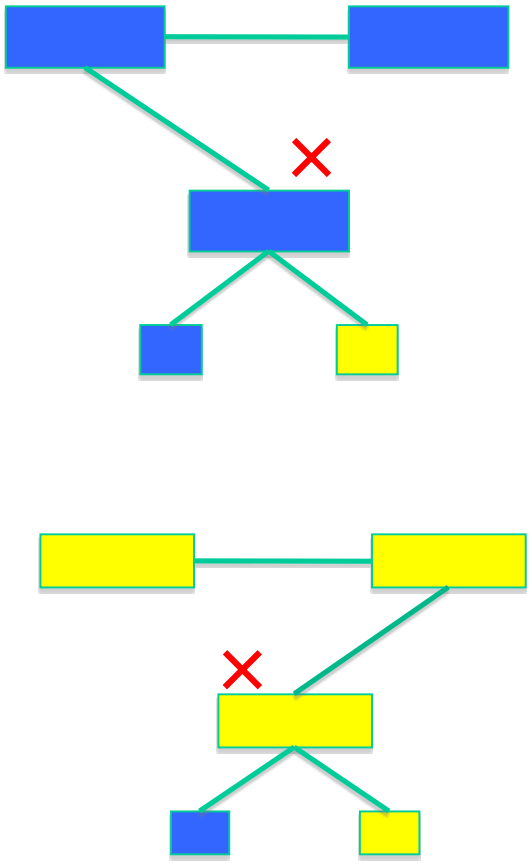

Multiple Spanning Tree (802.1s)

- MST Region
  - Switches are members of a region if they have the same set of attributes:
    - MST configuration name
    - MST configuration revision
    - Instance-to-VLAN mapping
  - A digest of these attributes is sent inside the BPDUs for fast comparison by the switches
  - One region is usually sufficient

Multiple Spanning Tree (802.1s)

- CST = Common Spanning Tree
  - In order to interoperate with other versions of Spanning Tree, MST needs a common tree that contains all the other islands, including other MST regions
- IST = Internal Spanning Tree
  - Internal to the Region, that is
  - Presents the entire region as a single virtual bridge to the CST outside

Multiple Spanning Tree (802.1s)

- MST Instances
  - Groups of VLANs are mapped to particular Spanning Tree instances
  - These instances will represent the alternative topologies, or forwarding paths
  - You specify a root and alternate root for each instance

Multiple Spanning Tree (802.1s)

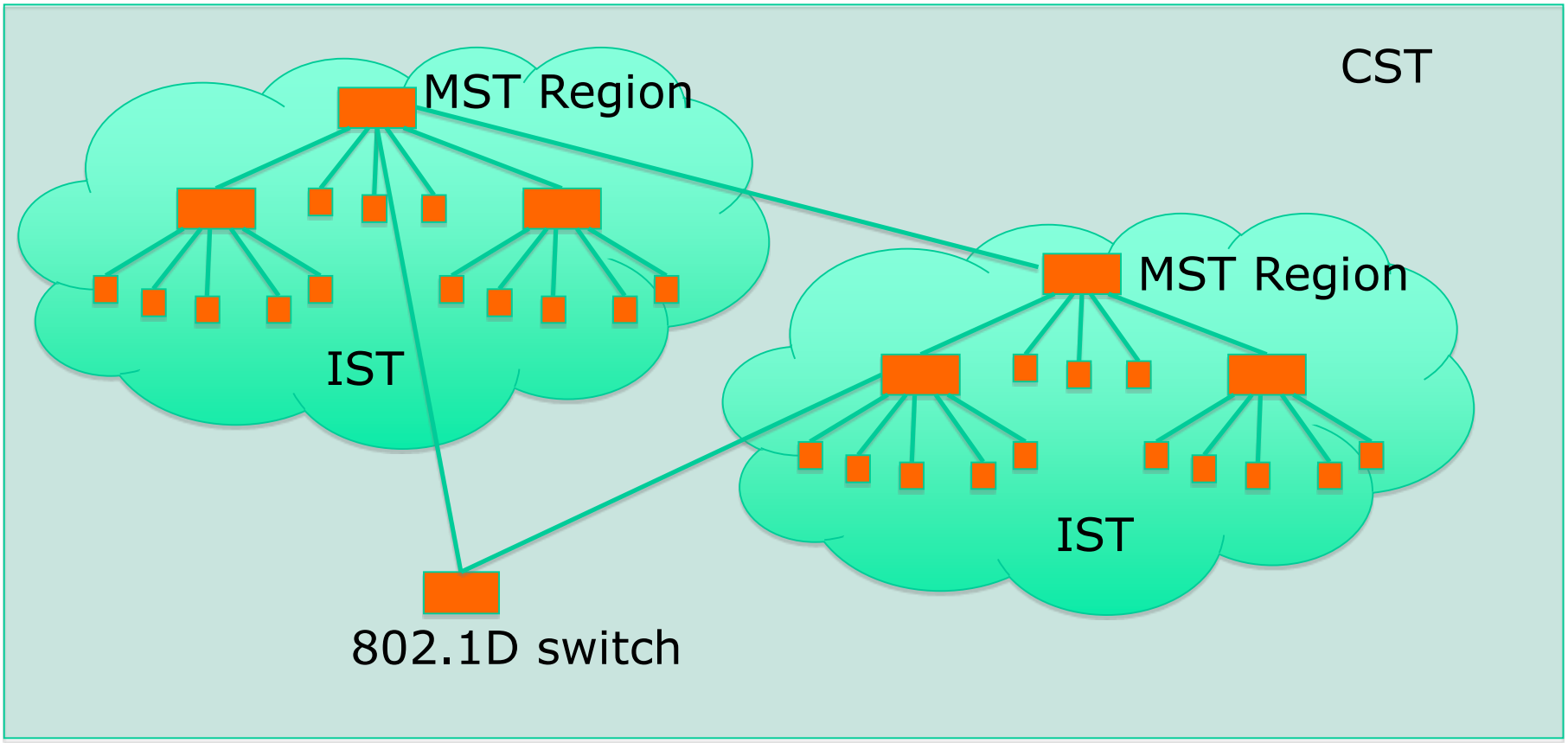

Multiple Spanning Tree (802.1s)

- Design Guidelines
  - Determine relevant forwarding paths, and distribute your VLANs equally into instances matching these topologies
  - Assign different root and alternate root switches to each instance
  - Make sure all switches match region attributes
  - Do not assign VLANs to instance 0, as this is used by the IST

Selecting Switches

- Minimum features:
  - Standards compliance
  - Encrypted management (SSH/HTTPS)
  - VLAN trunking
  - Spanning Tree (RSTP at least)
  - SNMP
    - At least v2 (v3 has better security)
    - Traps

Selecting Switches

- Other recommended features:
  - DHCP Snooping
    - Prevent end-users from running a rogue DHCP server
      - Happens a lot with little wireless routers (Netgear, Linksys, etc) plugged in backwards
    - Uplink ports towards the legitimate DHCP server are defined as “trusted”. If DHCPOFFERs are seen coming from any untrusted port, they are dropped.

Selecting Switches

- Other recommended features:
  - Dynamic ARP inspection
    - A malicious host can perform a man-in-the-middle attack by sending gratuitous ARP responses, or responding to requests with bogus information
    - Switches can look inside ARP packets and discard gratuitous and invalid ARP packets.

Selecting Switches

- Other recommended features:
  - IGMP Snooping:
    - Switches normally flood multicast frames out every port
    - Snooping on IGMP traffic, the switch can learn which stations are members of a multicast group, thus forwarding multicast frames only out necessary ports
    - Very important when users run Norton Ghost, for example.

Network Management

- Enable SNMP traps and/or syslog
  - Collect and process in centralized log server
    - Spanning Tree Changes
    - Duplex mismatches
    - Wiring problems
- Monitor configurations
  - Use RANCID to report any changes in the switch configuration

Network Management

- Collect forwarding tables with SNMP
  - Allows you to find a MAC address in your network quickly
  - You can use simple text files + grep, or a web tool with DB backend
- Enable LLDP (or CDP or similar)
  - Shows how switches are connected to each other and to other network devices

Documentation

- Document where your switches are located
  - Name switch after building name
    - E.g. building1-sw1
  - Keep files with physical location
    - Floor, closet number, etc.
- Document your edge port connections
  - Room number, jack number, server name