Internet overview

The Internet is a giant network of networks.

- A network may include PCs, and other devices like servers or printers.
- A network is connected through a communication channel.
- Early research was performed by the US Department of Defense in 1962. This research group established ARPAnet (Advanced Research Project Agency) in order to connect the US Defense Department network.

What did the Internet come from?

- Original aim was to create a network that would allow users of a research computer at one university to be able to 'talk to' research computers at other universities.
- A side benefit of ARPAnet's design was that, because messages could be routed or rerouted in more than one direction, the network could continue to function even if parts of it were destroyed in the event of a military attack or other disaster.
- The users of the Internet took a direction of their own.

History of the Internet

- The first long distance communication took place in 1965 between a computer in MIT and California.
- In 1969, four computers clients were connected together via ARPAnet.

How old is the Internet ?

- Leonard Kleinrock is accredited with the idea of packet switching, which describes how data can be sent across a network. The Ethernet was developed by Xerox during this period. This was inspired by Robert Metcalfe's PhD on 'packet networks'.
- An Ethernet is a protocol for describing how computers can be connected in a LAN (Local Area network).

- Through the use of Ethernet and ARPAnet the US were able to develop a working network.
- In the late 1970s and early 1980s other networks were developed, e.g. CSNET, USNET and BITNET. In 1973 Vint Cerf and Bob Kahn created the TCP/IP communication protocols.
- TCP/IP: Transfer Control Protocol/Internet Protocol is a set of rules that describe how computers can communicate over a network.
- To send information over the Internet, a computer packs data into Internet Protocol (IP) packets and labels them with the correct address. They are then sent across a packet switched interconnected network.

Introduction to Data Communication

The term telecommunication means communication at a distance. The word data refers to information presented in whatever form is agreed upon by the parties creating and using the data. Data communications are the exchange of data between two devices via some form of transmission medium such as a wire cable.

Computer Network

A network is a set of devices (often referred to as nodes) connected by communication links. A node can be a computer, printer, or any other device capable of sending and/or receiving data generated by other nodes on the network.

Software modules in one system are used to communicate with one or more software modules in the distance System. Such interfaces across a distance are termed as "peer-to-peer" interfaces; and the local interfaces are termed as "service" interfaces. The modules on each end are organized as a sequence of functions called "layers". The set of modules organized as layers is also commonly called a "protocol stack".

Over the years, some layered models have been standardized. The ISO Open Systems Interconnection (ISO/OSI) layered model has seven layers and was developed by a set of committees under the auspices of International Standards Organization (ISO).

Classification of Computer Networks

1.Based on Transmission Mode

Transmission mode defines the direction of signal flow between two linked devices. There are three types of transmission modes.

- **Simplex**

In simplex mode, the communication is unidirectional. Among the stations only one can transmit and the other can only receive.

- **Half-Duplex**

In half-Duplex mode, the communication is bidirectional. In this both station can sent and receive but not at the same time.

- **Full-Duplex**

In Full-Duplex mode, both stations can transmit and receive simultaneously.

2. Based on Time in Transmission Type

- **Synchronous Transmission**

In synchronous Transmission both the sender and the receiver use the same time cycle forthe transmission. We send bits one after another without start/stop bits or gaps. It is the responsibility of the receiver to group the bits. Bit stream is delivered with a fixed delay and given error rate. Each bit reaches the destination with the same time delay after leaving the source.

- **Asynchronous Transmission**

In Asynchronous Transmission we send one start bit at the beginning and one stop bit at the end of each byte. There may be a gap between each byte. Bit stream is divided into packets. Packets are received with varying delays, so packets can arrive out of order. Some packets are not received correctly.

3. Based on Authentication

- **Peer to Peer Connection**

  In peer-to-peer networks, there are no dedicated servers. All the computers are equal and, therefore, are termed as peers. Normally, each computer functions as both a client and a server. No one can control the other computers.

- **Server Based Connection**

  Most networks have a dedicated server. A dedicated server is a computer on a network which functions as a server, and cannot be used as a client or a workstation. A dedicated server is optimized to service requests from network clients. A server can control the clients for its services.

4. Based on Geographical location

- **Local Area Networks (LAN)**

  LAN is a small high speed network. In LAN few numbers of systems are interconnected with networking device to create network. As the distance increases between the nodes or system it speed decreases. So it is limed to few meters only. Networks which cover close geographical area. LAN used to link the devices in a single office, building or campus. It provides high speeds over short distance. Systems are connecting directly to Network. The LAN is owned by private people.

- **Wide Area Network (WAN)**

  WAN is collection of network (or LAN). This network speed is less than the LAN network speed.WAN network connect systems indirectly. WAN spread over the world may be spread over more than one city country or continent. Systems in this network are connected indirectly. Generally WAN network are slower speed than LAN's. The WAN network are owned or operated by network providers. If it is owned by a single owner then it is called Enterprise network. Often these types have combination of more than one topology.

- **MAN (Metropolitan Area Network)**

  Metropolitan area network is an extension of local area network to spread over the city. Itmay be a single network or a network in which more than one local area network canshare their resources.

5. Based on Reliability

Reliability is maintained by authentication.

- **Connection-oriented**

5. Based on Reliability

Reliability is maintained by authentication.

- **Connection-oriented**

  This type of communication establishes a session connection before data can be sent. This method is often called a "reliable" network service. It can guarantee that data will arrive in the same order.

- **Connection less**

  This type of communication does not require a session connection between sender and receiver for data transfer. The sender simply starts sending packets to the destination. A connectionless network provides minimal services.

Topology

Topology refers to physical layout including computers, cables, and other resources; it determines how components communicate with each other.

Today's network designs are based on three topologies:

- Bus consists of series of computers connected along a single cable segment
- Star connects computers via central connection point or hub
- Ring connects computers to form a loop

All computers, regardless of topology, communicate by addressing data to one or more computers and transmitting it across cable as electronic signals. Data is broken into packets and sent as electronic signals that travel on the cable. Only the computer to which the data is addressed accepts it.

Protocol

Protocols mean set of rules. It is a formal description of message formats and the rules two or more machines has follow to exchange messages. The key elements of a protocol are syntax, semantics and timing.

- **Syntax**

  Syntax refers to the structure or format of the data, meaning the order in which they arepresented.

- **Semantics**

  Semantics refers to the meaning of each section of bits.

- **Timing**

  Timing refers to when data should be sent and how fast it can be sent.

Internetworking Technologies

Internetworking Technologies tell how the Internet accommodating multiple underlying hardware technologies and how they are interconnected and formed the network, and set of communication standard which the network used to inter-operate.

The lowercase internet means multiple networks connected together, using a commonprotocol suite. The uppercase Internet refers to the collection of hosts around the world that can communicate with each other using TCP/IP. While the Internet is an internet, the reverse is not true.

Network Infrastructure or Transmission Infrastructure:

Network infrastructure is divided into two parts.

1. **Access Networks**

An access network is the part of a telecommunications network which connects end system to the first router or subscribers to their immediate service provider as shown in figure 1.

Network Infrastructure or Transmission Infrastructure:

Network infrastructure is divided into two parts.

1. **Access Networks**

An access network is the part of a telecommunications network which connects end system to the first router or subscribers to their immediate service provider as shown in figure 1.

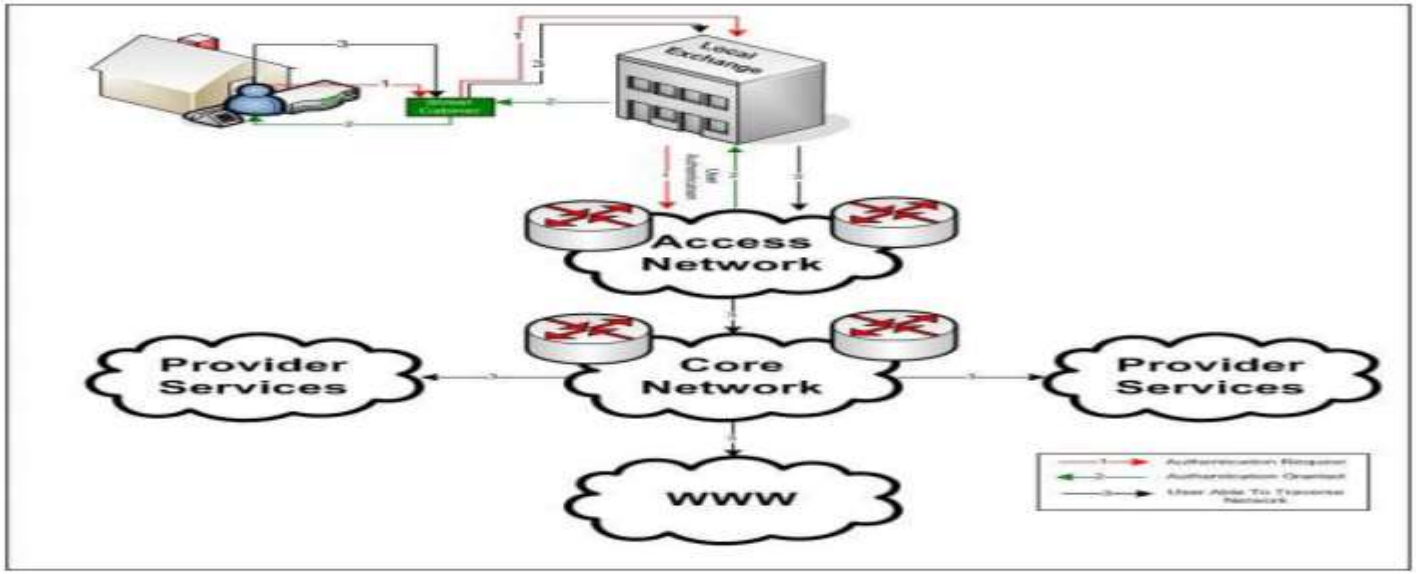

Figure 1 Network Infrastructure

It is different from core network which connects all the routers to each other and ISP(Internet service provider). An access network may be a so-called local area network within a company or university, a dial telephone line with a modem, or a high-speed cable-based or phone-based access network.

Access networks can be loosely divided into three categories:

- Residential access networks, connecting a home end system into the network.
- Institutional access networks, connecting an end system in a business or educational institution into the network.
- Mobile access networks, connecting a mobile end system into the network

Core Networks:

Core network connects all the routers to each other and ISP (Internet service provider). It is a main back bone for internet. Core network uses circuit switching and packet switching for data transmission.

ISPs:(Internet Service Provider)

In internet bottom-to-top the hierarchy consists of end systems (PCs, workstations, etc.)connected to local Internet Service Providers (ISPs). The local ISPs are in turn connected to regional ISPs, which are in turn connected to national and international ISPs. The national and international ISPs are connected together at the highest tier in the hierarchy.

Let's begin at the top of the hierarchy and work our way down. Residing at the very top of the hierarchy are the national ISPs, which are called **National Backbone Provider (NBPs).** The NBPs form independent backbone networks that span North America (and typically abroad as well). Just as there are multiple long-distance telephone companies in the USA, there are multiple NBPs that compete with each other for traffic and customers. The existing NBPs include internetMCI, SprintLink, PSINet, UUNet Technologies, and AGIS. The NBPs typically have high-bandwidth transmission links, with bandwidths ranging from 1.5 Mbps to 622 Mbps and higher. Each NBP also has numerous hubs which interconnect its links and at which regional ISPs can tap into the NBP.

The NBPs themselves must be interconnected to each other. To see this, suppose one regional ISP, say MidWestnet, is connected to the MCI NBP and another regional ISP, say EastCoastnet, is connected to Sprint's NBP. How can traffic be sent from MidWestnet to EastCoastnet? The solution is to introduce switching centers, called Network Access Points (NAPs), which interconnect the NBPs,

thereby allowing each regional ISP to pass traffic to any other regional ISP. To keep us all confused, some of the NAPs are not referred to as NAPs but instead as **MAEs (Metropolitan Area Exchanges).**

Component of Internet:

A network (or internet) is formed using Hardware (or network device) and network software or Application and protocols.

Hardware or Network device:

1. **Hub:**
   - It is uses to connect systems or nodes or networks.
   - It has direct connection to a node (point to point connection).
   - It suffers from high collision of data, results to data loss.
   - A hub takes data from input port and retransmits the input data on output port.

2. **Repeater:**
   - A repeater is a device which regenerates or amplifies the data or signal so that it can be travel to the other segment of cable.
   - It is use to connect two networks that uses same technology and protocol.
   - It does not filter or translate any data.
   - Work in physical layer.

3. Bridge:

- It is used to connect two networks.
- It divides the collision domain based on number of ports or interface present in a bridge.
- It uses the packet switches that forward and filter the frames using LAN destination address.
- Bridge examines the destination address of frame and forwards it to the interface or port which leads to the destination.
- It uses the routing table for routing frame from one node to other using MAC address.
- It works in Data Link Layer.

4. Switch :

- It is similar to bridge. It has more number of interfaces as compared to bridge.
- It allows direct communication between the nodes.

- It works in Data Link Layer.
- It uses MAC address for data transmission and communication.

5. **Router:**
    - It is used to connect different types of network (types- architecture/ Protocol).
    - It work similar to bridge but it uses IP address for routing data.
    - Router can't be used for connecting Systems.
    - It works in Network Layer.
6. **Gateways:**

    Gateways make communication possible between systems that use different communication protocols, data formatting structures, languages and architectures. Gateways repackage data going from one system to another. Gateways are usually dedicated servers on a network and are task-specific.

System, Software and Protocols:

Basically two types of system are used in Internet

- Client system: User which access data from internet.
- Server System: Host data for users using HTML files.

Software or Applications and protocols:

- Chat- IRC (Internet Relay Chat) is used for live discussions on the Internet.
- Ecommerce - Taking orders for products and services on the Internet.
- E-mail - Exchanging electronic letters, messages, and small files.
- FTP - File Transfer Protocol is the most common method of transferring files between computers via the Internet.
- Hosting - Making information available to others on the Internet.
- Search Engines - These tools are really a part of the World Wide Web and are often used when looking for information because the Web has grown so large and is without any inherent organizational structure.
- Telnet - Creation of a dumb terminal session to a host computer in order to run software applications on the host system.

- World Wide Web - This is largest, fastest growing, part of the Internet, the part for which Internet browsers like Netscape's Navigator and Microsoft's Explorer were designed. Business is the leading factor fueling the rapid growth of the Web making information, advertising, and product ordering readily available to everyone with Web access.

- TCP/IP
- Browser

WAN Protocols

- **Frame Relay**

  Frame relay is used to connect large number of sites in the network because it is relatively inexpensive to do so. The service provider gives you a frame relay circuit and is charged for the amount of data and the bandwidth you use as oppose to T1 circuit that charges with a flat monthly rate whether you use partial bandwidth or the full bandwidth regardless. Frame relay is a high performance WAN protocol that operates at the Data Link layer and the Physical layer of the OSI model.

- **Integrated Services Digital Network (ISDN)**

Integrated Services Digital Network (ISDN) is designed to run over existing telephone networks. It can deliver end to end digital service carrying voice and data. ISDN operates at OSI model, physical layer, data link layer and network layer. It can carry multimedia and graphics with all other voice, data services. ISDN supports all upper layer protocols and you can choose PPP, HDLC or LAPD as your encapsulation protocol. It has two offerings, Primary rate which is 23B+D channels. 23, 64 kbps and one 64kbps mainly used for signaling. The other is the Basic Rate which has 2B+D channels two 64kbps and one 16kbps. At data link layer ISDN supports two protocols; LAPB and LAPD. LAPB is used to mainly transfer data from upper layers and has three types of frames. I-Frames carry upper layer information and carries out sequencing, flow control, error detection and recovery. S- Frames carry control information for the I-frame. LAPD provides an additional multiplexing function to the upper layers enabling number of network entities to operate over a single physical access. Each individual link procedure acts independently of others. The multiplex procedure combines and distributes the data link channels according to the address information of the frame. Each link is associated with a specific Service Access Point (SAP), which is identified in the part of the address field.

- **High Level Data Link Control (HDLC)**

High Level Data Link Control (HDLC) is a bit oriented data link layer frame protocol that has many versions similar to LAP, LAPB, and LAPD. CISCO routers default encapsulation is HDLC, but it is proprietary to CISCO.

OSI model

OSI (Open System Interconnection), developed by the International Organizationfor Standardization (ISO), was the solution designed to promote interoperabilitybetween vendors. It defines architecture for communications that support distributed processing.

The OSI model describes the functions that allow systemsto communicate successfully over a network. Using what is called a layeredapproach, communications functions are broken down into seven distinct layers.

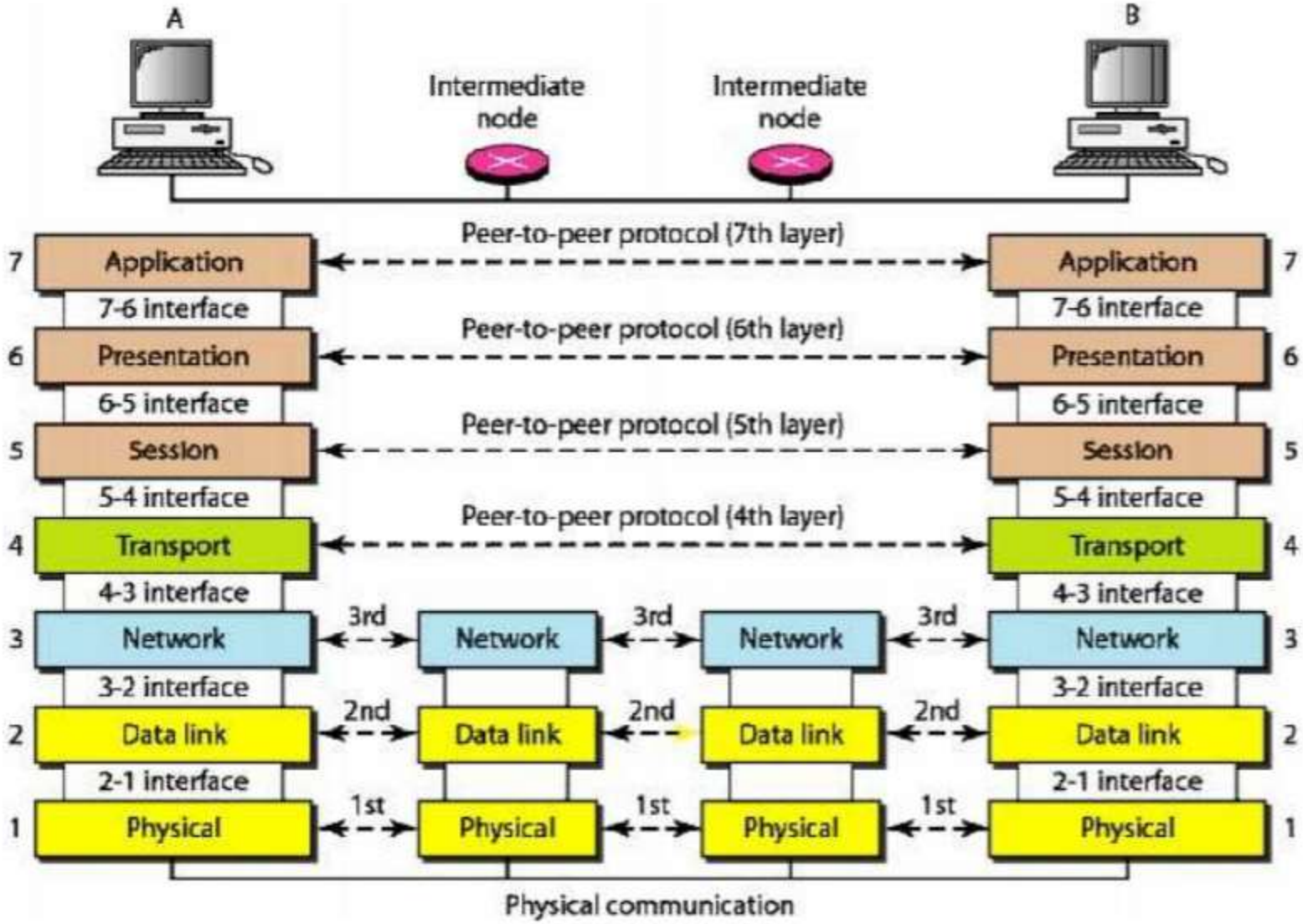

Figure 2 Interaction between layers in OSI model.

The seven layers, beginning with the bottom layer of the OSI model, are shown in figure 2.Routers are used as intermediate node to create a link between A and B end system.

OSI model layers are dependent on each other. Each layer serves the upper layer and also depends upon the services from the lower layer.

OSI model also provide the layer abstraction. Layers are dependent on each other for services but in terms of protocol they are independent.

In each layer information is added into original data as header but in data link layer trailer is added into the data as shown in figure xxxxxxx

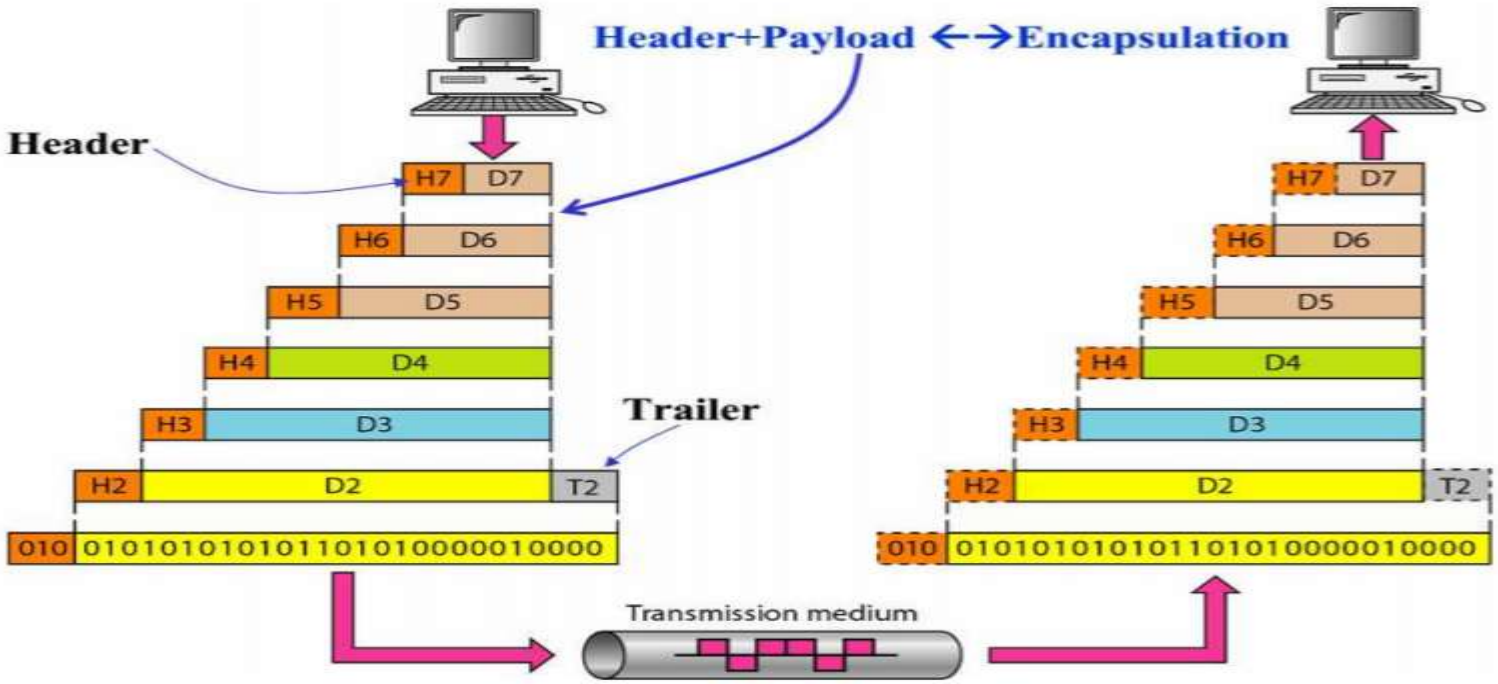

Figure 3 Exchange of data using OSI model

OSI Model Layer

Layer 1: Physical Layer

- It defines the transmission of data across the communications medium and translation of binary data into signals.
- Mode of transmission over the link i.e Simplex or Half Duplex or Full Duplex
- It defines the transmission rate of bits per second.

Layer 2: Data Link Layer

- It divides the data into number of frames.
- It uses the MAC address for sending frames from one node to other.
- It provides flow control, error control and access control.

Layer 3: Network Layer

- It divides data into number of packets.
- It uses IP address for routing packets to their destination.
- It provides end to end connection.

Layer 4: Transport Layer

- It divides message into segments and also reassemble the segments to create original message.
- It can be either connection-oriented or connectionless.
- It uses service-point address or port address for process to process communication.
- Flow control and error control also provided by transport layer.

Layer 5: Session Layer

- Session Layer establishes, maintains and synchronizes the interaction among communicatingsystems.

Layer 6: Presentation Layer

- It is concerned with the syntax and semantics of the informationexchangedbetweentwo systems.
- It translates information from text/numeric into bit stream.
- It also encrypts the information for security purpose and compress the information to reduce the number of bits in the information.

Layer 7: Application Layer

- It provides the interface to the end user and supports for services such as Email, file transfer and distributed information service.

OSI Model and Protocol stack

Layer	Protocol
Application	HTTP, FTP, SMTP,TELNET
Presentation	JPG, GIF, MPEG,
Session	TCP 3-way Handshaking
Transport	TCP, UDP
Network	IP, IPX
Data Link	Ethernet, Token Ring, HDLC
Physical	X.21, RS-232, DS, DS3

TCP/IP model

- TCP/IP protocol suite was developed before the OSI model.
- TCP/IP is a set of protocols developed to allow cooperating computers to share resources across a network.
- In 1969 the Defense Advanced research projects Agency (DARPA) funded a research and development project to create an experimental packet switching network. This network is called ARPANET.
- In 1975 the ARPANET was converted from an experimental network to an operational network, and the responsibility for administering the network was given to the Defense Communication Agency (DCA).
- The TCP/IP protocols were adopted as Military Standards (MIL STD) in 1983, and all hosts connected to the network were required to convert to the new protocols.
- DARPA funded to implement TCP/IP in BerkelyUnix.
- In 1983, the old ARPANET was divided into MILNET and smaller ARPANET. The Internet was used to refer to the entire network; MILNET and ARPANET.

Advantages of TCP/IP

Open protocol standards, freely available and developed independently from any specific computer hardware or operating system. A common addressing scheme which is enable to connect the most widely used networks. It may use any protocols. It connects dissimilar systems. It provides client/server framework. It provides access to the Internet

Differences of the OSI and TCP/IP models

TCP/IP combines the presentation and session layer into its application layer. TCP/IPcombines the OSI data link and physical layers into one layer. TCP/IP appears simpler because it has fewer layers. TCP/IP transport layer using UDP does not always guarantee reliable deliveryof packets as the transport layer in the OSI model does.

Packet Switching fundamentals

A network is a collection of inter connected system. In a network we have in one to one communication. To resolves this one of the solution is to make point to point connection between each pair of system(using mesh topology)or connecting centralized system to every other system(using star topology). But still this is not a cost effective as number of system grows and it is limited to small distance between inter connected system.

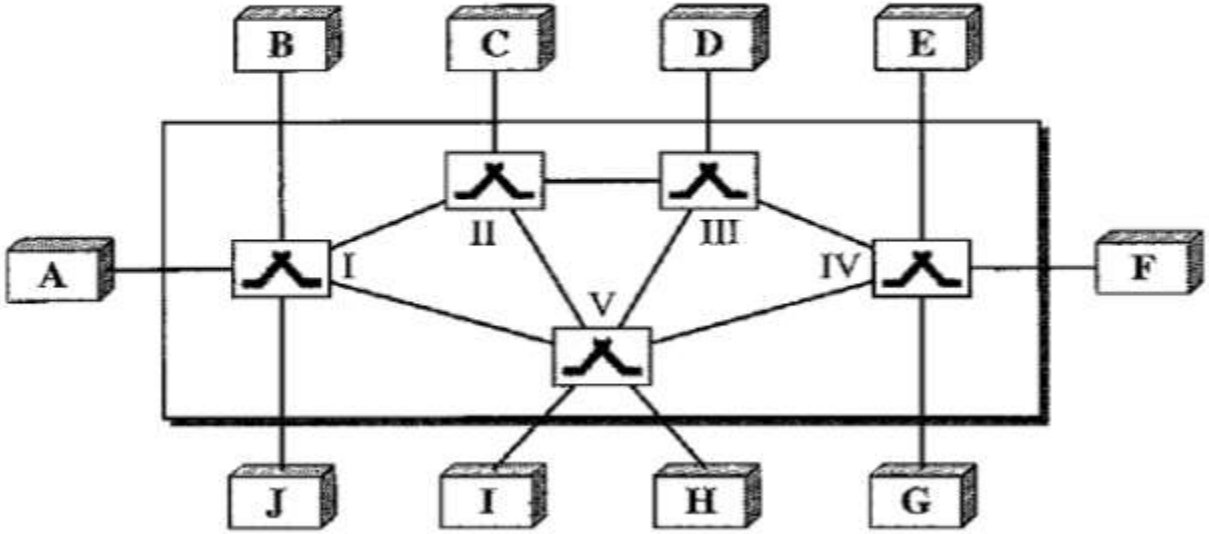

Figure 4 Switched Network

A solution to the above problem is switching. A switched network consists of a series of interlined device called switches (shown in figure 2). It is a device which can create a temporary connections between two or more system linked to the switch. In switched network some of the nodes are system and other are used for routing.

The end systems (communicating devices) are labeled A, B, C, D, and so on, and the switches are labeled I, II, III, IV, and V. Each switch is connected to multiple links.

There are three method of switching

1. Circuit Switched Networks

2. Packet Switched Networks

    A. Datagram Networks

    B. Virtual- circuit Networks

3. Message Switched Networks

1. Circuit Switched Network:

- In circuit-switched networks, a dedicated path is needed for communication between the end systems are reserved for the duration of the session.
- Each connection uses only one dedicated channel on each link.
- Each link is divided into n channels by using FDM (frequency division Multiplexing) or TDM (Time Division multiplexing).

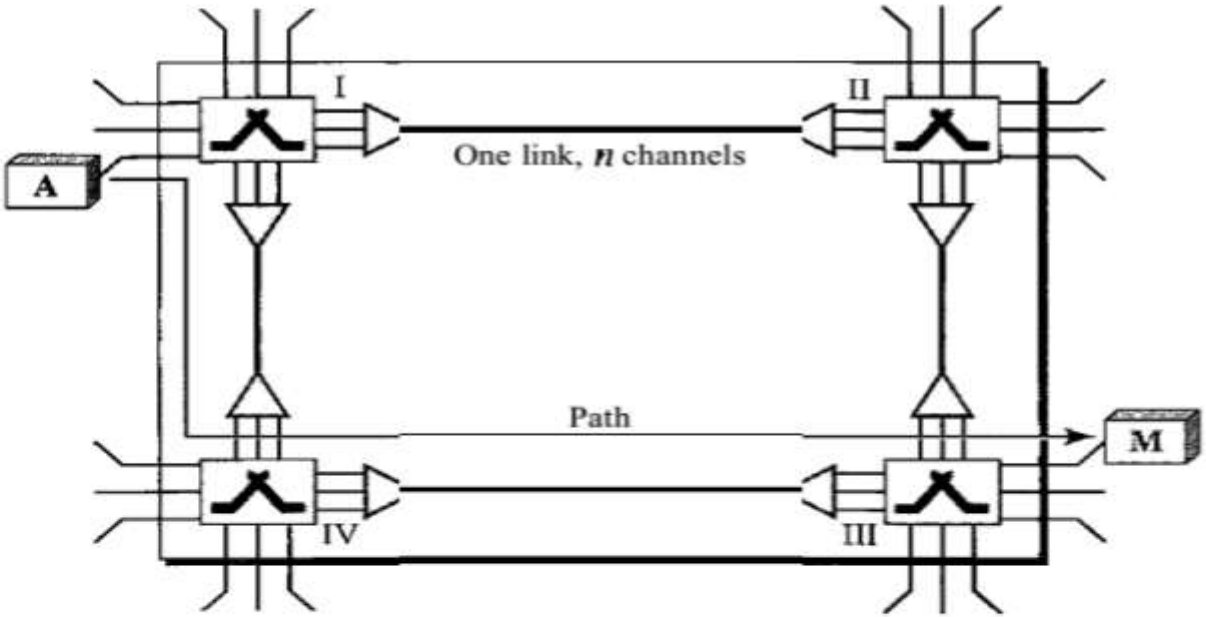

Figure 5A trivial circuit-switched network

In the above figure one link is divided into n channel (here n=3).A circuit switched network requires following three phase during the session.

In the above figure one link is divided into n channel (here n=3).A circuit switched network requires following three phase during the session.

1. **Setup Phase:** First of all two system needs to create dedicated circuit or path for communication. For example in figure xxx when system A needs to connect to system M, it sends a setup request that includes the address of system M, to switch I. Switch I finds a channel between itself and switch II that can be dedicated for this purpose. Switch I then sends the request to switch II, which finds a dedicated channel between itself and switch III. Switch III informs system M of about system A.

To establish a path system M must send an acknowledgement for the request of A. Only after system A receives this acknowledgement the connection is established. Only end to end addressing is required for establishing connection between two end systems.

2. **Data Transfer Phase**

   After the establishment of the dedicated path (channels), the two systems can transfer data.

3. **Teardown Phase**

   When one of the systems needs to disconnect, a signal is sent to each switch to release the resources.

Not efficient because the link is reserved and can't be used by other system during the connection. Minimum delay in data transfer.

Example: Let us consider how long it takes to send a file of 640 Kbits from host A to host B over a circuit-switched network. Suppose that all links in the network use TDM with 24 slots and have bit rate 1.536 Mbps. Also suppose that it takes 500 msec to establish an end-to-end circuit before A can begin to transmit the file. How long does it take to send the file?

Each circuit has a transmission rate of (1.536 Mbps)/24 = 64 Kbps, so it takes (640 Kbits)/(64 Kbps) = 10 seconds to transmit the file. To this 10 seconds we add the circuit establishment time, giving 10.5 seconds to send the file. Note that the transmission time is independent of the number links: the transmission time would be 10 seconds if the end-to-end circuit passes through one link or one-hundred links.

2. Packet Switched Networks

2. A. Datagram Networks

- In packet switched network message is divided into number of packets. Each packet is of fixed size defined by network or protocol.
- **Datagram switched network is also known as Connectionless packet switching**
- There is no dedicated link between source and destination.

- No dedicated Resources are allocated for packet. Resources are allocated on demand and it follows first come first basis. When a switch receives a packet, irrespective of the source or destination, the packet must wait if the other packets being processed.
- A single message is divided into number of packets. During the transfer of packets from source to destination, each packet is treated independently. Destination can receive unordered packets and later packet can be ordered and combine the packets to extract the message.
- Packets are referred as datagrams in this type of switching. Datagram switching is normally done at the network layer.
- The datagram networks are referred to as connectionless networks. Connectionless means

- The datagram networks are referred to as connectionless networks. Connectionless means switches have no connection state information.
- There is no setup and teardown phase. So a routing table is required in every switch to route packet from source to destination. A Routing table is based on the destination address. The routing table updated periodically. The destination addresses and the corresponding forwarding output ports are recorded in the tables. This is different from the table of a circuit switched network in which each entry is created when the setup phase is completed and deleted when the teardown phase is over. Figure 4`shows the routing table for a switch.

Destination address	Output Port
1234	1
4444	2
6666	3
…..	.
2222	3

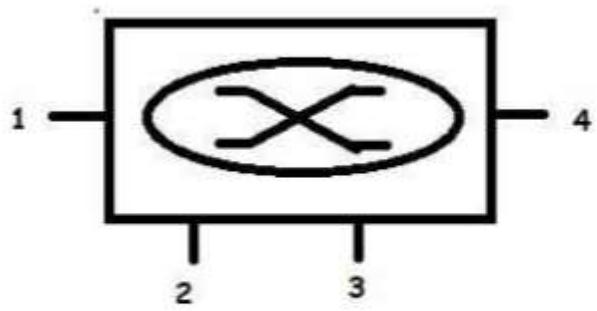

Figure 6 Routing table for a switch

Destination Address

Every packet in a datagram network carries a header that contains information of the destination address of the packet. When the switch receives the packet, this destination address is examined; the routing table is consulted to find the corresponding port through which the packet should be forwarded. This address, unlike the address in a virtual-circuit-switched network, remains the same during the entire journey of the packet.

Efficiency

The efficiency of a datagram network is better than that of a circuit-switched network; resources are allocated only when there are packets to be transferred. If a source sends a packet and there is a delay of a few minutes before another packet can be sent, the resources can be reallocated during these minutes for other packets from other sources.

Delay

There may be greater delay in a datagram network than in a virtual-circuit network .Although there are no setup and teardown phases, each packet may experience a wait at a switch before it is forwarded. In addition, since not all packets in a message necessarily travel through the same switches, the delay is not uniform for the packets of a message.

Switching in the Internet is done by using the datagram approach to packet switching at the network layer.

2.B. Virtual –Circuit Networks:

A virtual-circuit network uses the characteristics of both the circuit switched network and the datagram network. A virtual-circuit network is normally implemented in the data link layer, while a circuit-switched network is implemented in the physical layer and a datagram network in the network layer. Virtual-circuit network is also known as Connection-oriented packet switching

Addressing

Two types of addressing is used in virtual-circuit network

- Global Address: It is an address which can uniquely identify the systems (source or destination) in a network or internet. This address is used to create virtual circuit identifier only.
- Virtual Circuit Identifier: The identifier that is actually used for data transfer is known as virtual circuit identifier (VCI). It is a number which is used in a frame between two switches. This VCI changes from one switch to another. Every switch uses a fixed range of values for VCI.

Three phases of Virtual –Circuit Networks:

1. **Data Transfer Phase**

- To transfer a frame from a source to its destination, all switches need to have a table entry for this virtual circuit.
- The table, in its simplest form, has four columns.
- This means that the switch holds four pieces of information for each virtual circuit that is already setup.
- Figure 6 shows such a switch and its corresponding table. Figure 7 shows a frame arriving at port 1with a VCI of 14. When the frame arrives, the switch looks in its table to find port 1 and VCI of 14.When it is found, the switch knows to change the VCI to 22 and send out the frame from port 3.

- The data transfer phase is active until the source sends all its frames to the destination.
- The procedure at the switch is the same for each frame of a message.
- The process creates a virtual circuit, not a real circuit, between the source and destination.

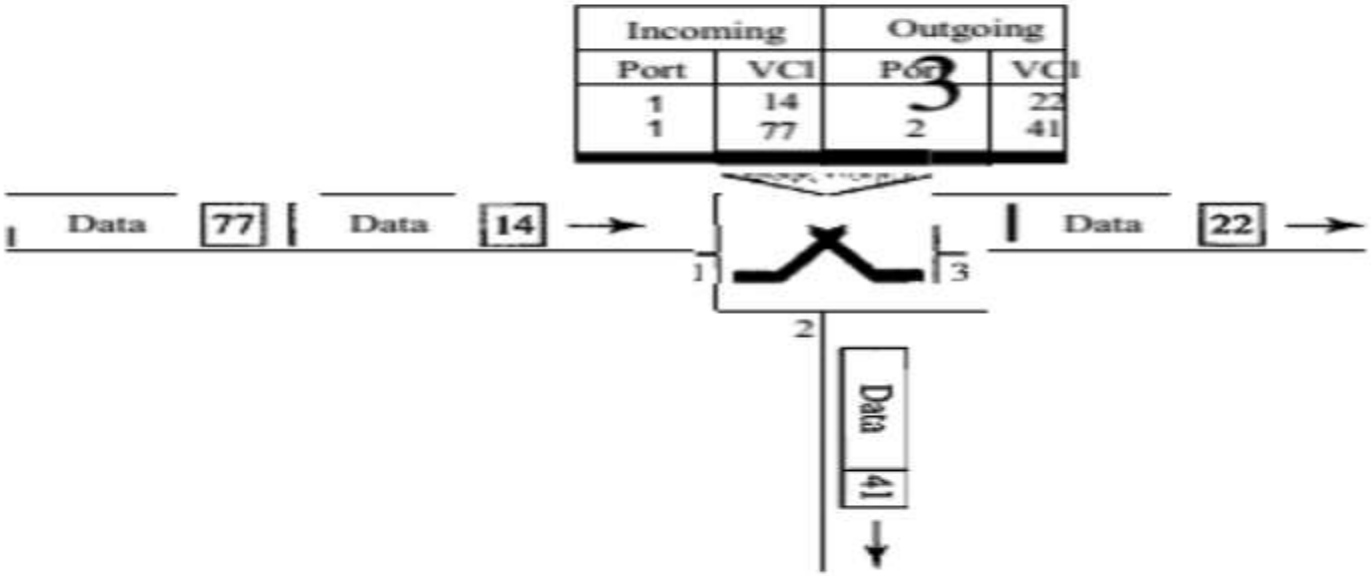

Figure 7 Switch and tables in a virtual-circuit network

2. Setup Phase

In the setup phase, a switch creates an entry for a virtual circuit. For example, suppose source A needs to create a virtual circuit to B. Two steps are required: the setup request and the acknowledgment.

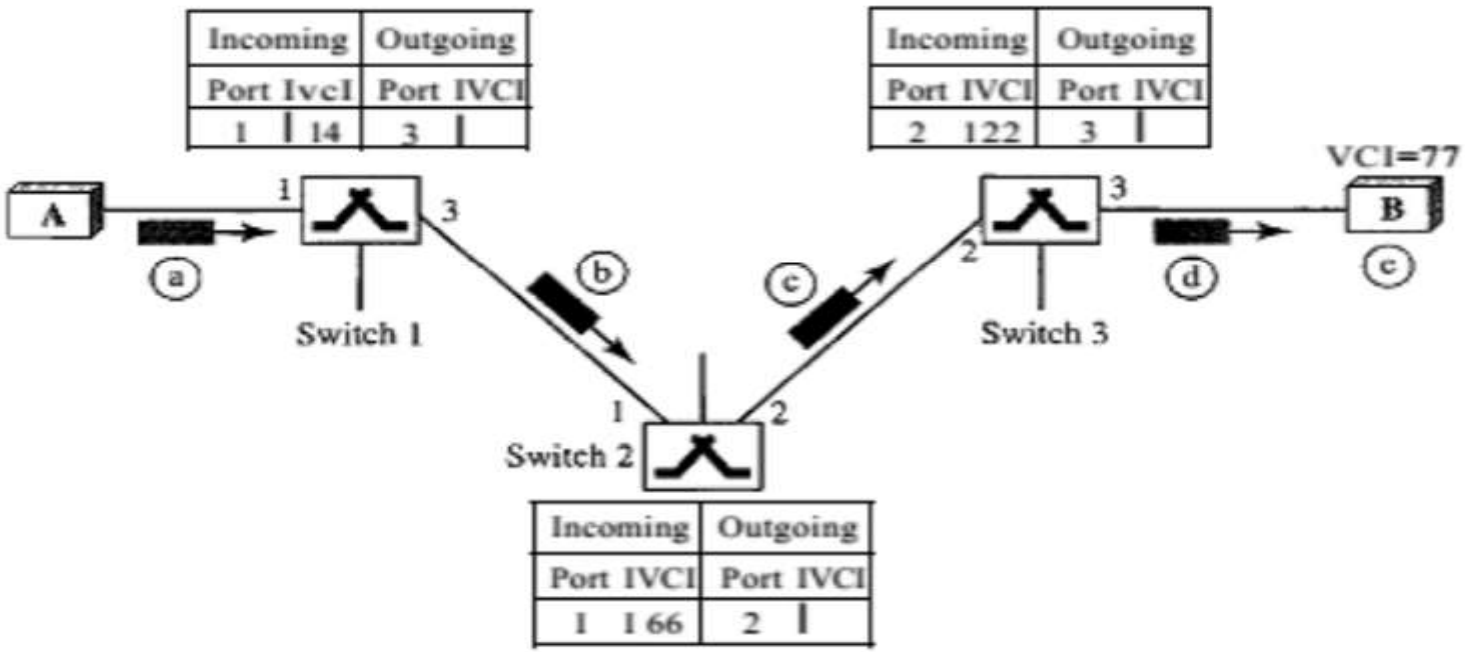

Figure 8 Setup request in a virtual-circuit network

2.1. Setup Request:

A setup request frame is sent from the source to the destination. Figure 6 shows the process.

2.1. Setup Request:

A setup request frame is sent from the source to the destination. Figure 6 shows the process.

a. Source A sends a setup frame to switch 1.

b. Switch 1 receives the setup request frame. It knows that a frame going from A to B goes out through port 3.The switch, in the setup phase, acts as a packet switch; it has a routing table which is different from the switching table. For the moment, assume that it knows the output port. The switch creates an entry in its table for this virtual circuit, but it is only able to fill three of the four columns. The switch assigns the incoming port (1) and chooses an available incoming VCI (14) and the outgoing port (3). It does not yet know the outgoing VCI, which will be found during the acknowledgment step. The switch then forwards the frame through port3 to switch 2.

c. Switch 2 receives the setup request frames. The same events happen here as at switch1; three columns of the table are completed: in this case, incoming port (l), incoming VCI (66), and outgoing port (2).

d. Switch 3 receives the setup request frame. Again, three columns are completed: Incoming port (2), incoming VCI (22), and outgoing port (3).

e. Destination B receives the setup frame, and if it is ready to receive frames from A, it assigns a VCI to the incoming frames that come from A, in this case 77. This VCI lets the destination know that the frames come from A, and no other sources.

2.2.Acknowledgment:

A special frame, called the acknowledgment frame, completes the entries in the switching tables. Figure 7 shows the process.

a. The destination sends an acknowledgment to switch 3. The acknowledgment carries the global source and destination addresses so the switch knows which entry in the table is to be completed. The frame also carries VCI 77, chosen by the destination as the incoming VCI for frames from A. Switch 3 uses this VCI to complete the outgoing VCI column for this entry. Note that 77 is the incoming VCI for destination B, but the outgoing VCI for switch 3.
b. Switch 3 sends an acknowledgment to switch 2 that contains its incoming VCI in the table, chosen in the previous step. Switch 2 uses this as the outgoing VCI in the table.
c. Switch 2 sends an acknowledgment to switch 1that contains its incoming VCI in the table, chosen in the previous step. Switch 1uses this as the outgoing VCI in the table.
d. Finally switch 1 sends an acknowledgment to source A that contains its incoming VCI in the table, chosen in the previous step.
e. The source uses this as the outgoing VCI for the data frames to be sent to destination B.

e. The source uses this as the outgoing VCI for the data frames to be sent to destination B.

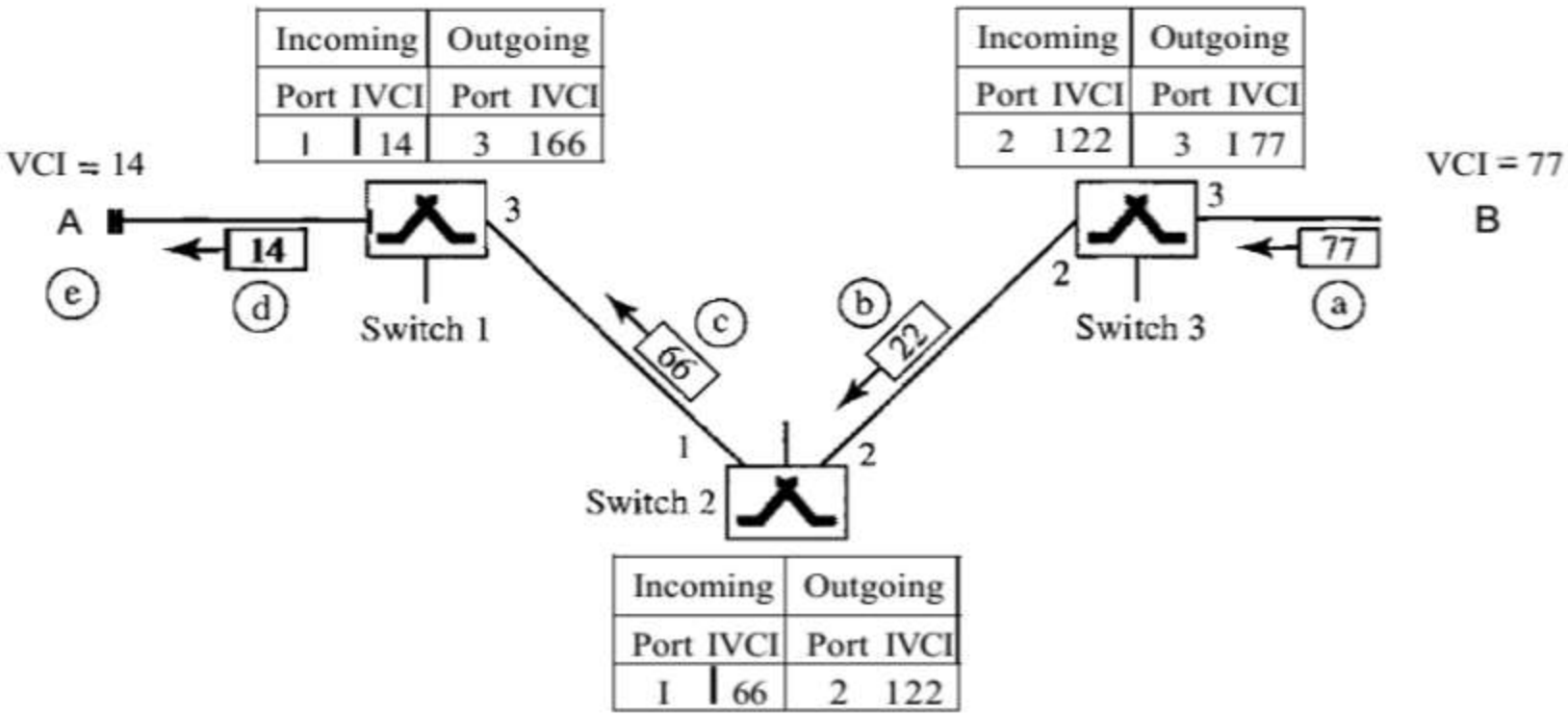

Figure 9 Setup acknowledgment in a virtual-circuit network

1. **Teardown Phase**

In this phase, source A, after sending all frames to B, sends a special frame called a teardown request. Destination B responds with a teardown confirmation frame. All switches delete the corresponding entry from their tables.

<u>Note:</u> In virtual-circuit switching, all packets belonging to the same source and destination travel the same path; but the packets may arrive at the destination with different delays if resource allocation is on demand.

Efficiency of Virtual-Circuit Networks:

Virtual-Circuit Networks uses the resources efficiently and it reduces the waiting time of data frame.

Delay in Virtual-Circuit Networks:

In a virtual-circuit network, there is a delay for setup and for teardown. If resources are allocated during the setup phase, there is no wait time for individual packets. Figure 8 shows the delay for a packet traveling through two switches in a virtual-circuit network.

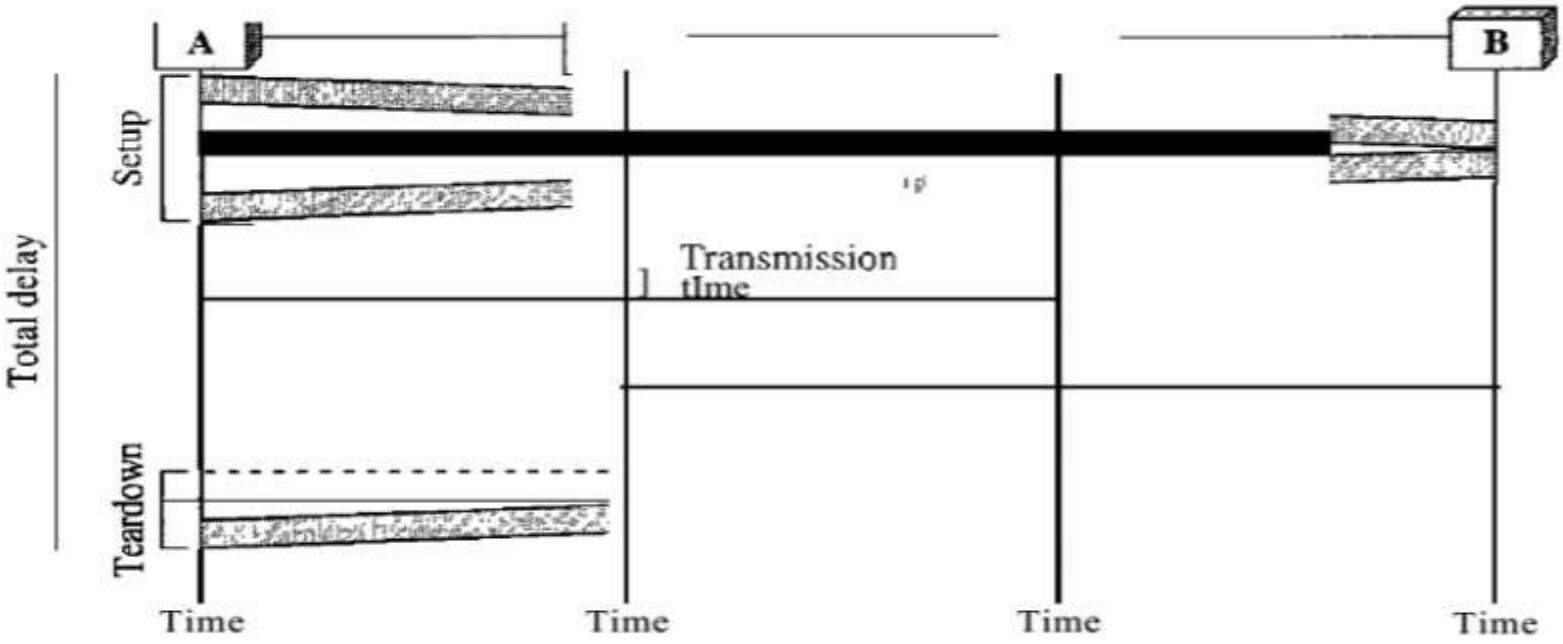

Figure 10 Delay in a virtual-circuit network

three propagation times (3T), data transfer depicted by the sloping lines, a setup delay (which includes transmission and propagation in two directions), and a teardown delay (which includes transmission and propagation in one direction).

We ignore the processing time in each switch. The total delay time is

Total delay=3T+3 T +setup delay + tear down delay

Packet Switching versus Circuit Switching

Packet Switching	Circuit Switching
1. Packet switched network is implemented in the physical layer.	1. Circuit-switched network is implemented in the physical layer.
2. Message is divided into number of packets or frames.	2. Complete message is transfer from source to destination.
3. Resources are allocated on demand if available (or free).	3. Resources are reserved during the data transfer.
4. More efficient and less costly.	
5. A link can be used by any number of user.	4. Less efficient and more costly.
	5. As the number of users increases, the bandwidth for each user decreases. But most of the time fixed number of user can use a link because number of channel is fixed.
6. It has unpredictable delay due to waiting of packets/frames at switch, if resources are not available.	6. It has less delay in data transmission.

Packet Switching versus Circuit Switching

Packet Switching	Circuit Switching
1. Packet switched network is implemented in the physical layer.	1. Circuit-switched network is implemented in the physical layer.
2. Message is divided into number of packets or frames.	2. Complete message is transfer from source to destination.
3. Resources are allocated on demand if available (or free).	3. Resources are reserved during the data transfer.
4. More efficient and less costly.	4. Less efficient and more costly.
5. A link can be used by any number of user.	5. As the number of users increases, the bandwidth for each user decreases. But most of the time fixed number of user can use a link because number of channel is fixed.
6. It has unpredictable delay due to waiting of packets/frames at switch, if resources are not available.	6. It has less delay in data transmission.
7. Suitable for most of the Internet applications.	7. Suitable for real time applications.