The Medium Access Control Sublayer

Chapter 4

Channel Allocation Problem

- Static channel allocation
- Assumptions for dynamic

Assumptions for Dynamic Channel Allocation

1. Independent traffic
2. Single channel
3. Observable Collisions
4. Continuous or slotted time
5. Carrier sense or no carrier sense

Multiple Access Protocols

- ALOHA
- Carrier Sense Multiple Access
- Collision-free protocols
- Limited-contention protocols
- Wireless LAN protocols

ALOHA (1)

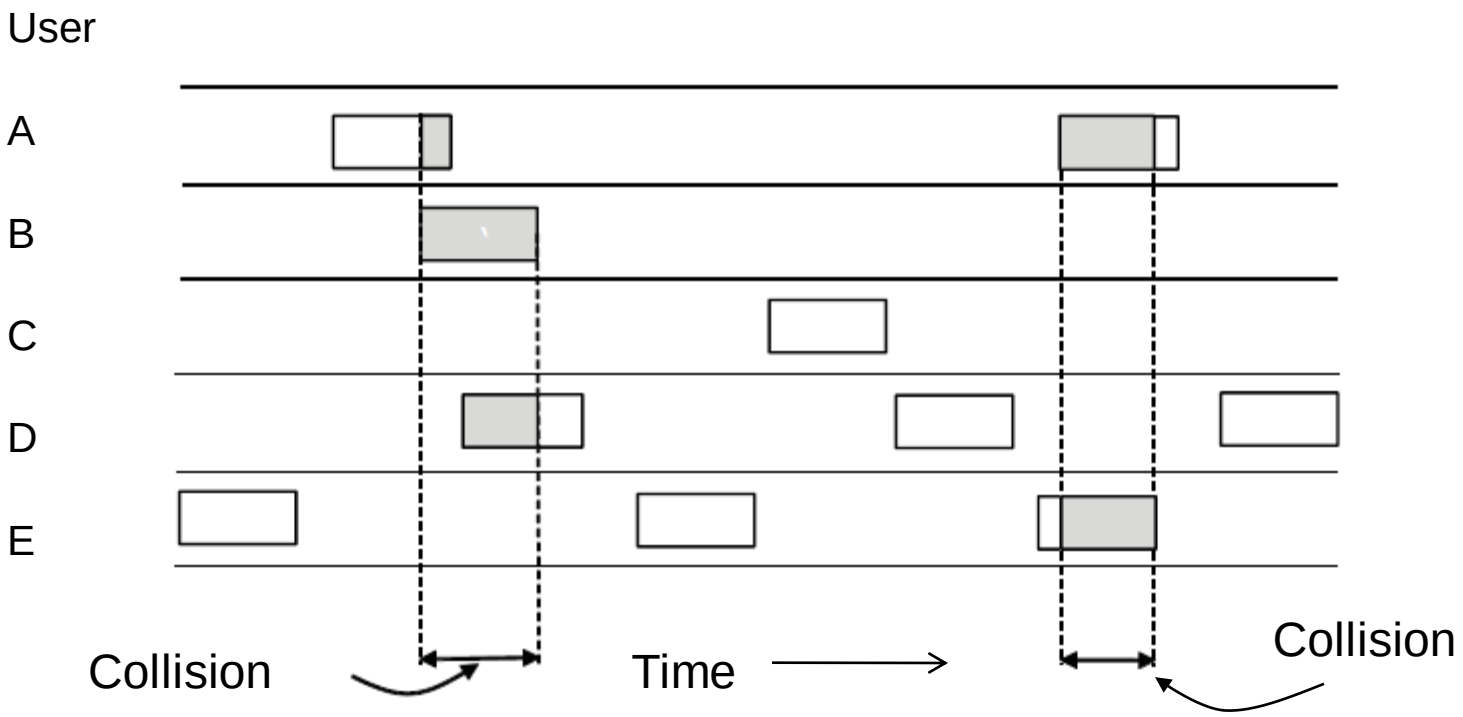

In pure ALOHA, frames are transmitted at completely arbitrary times

ALOHA (2)

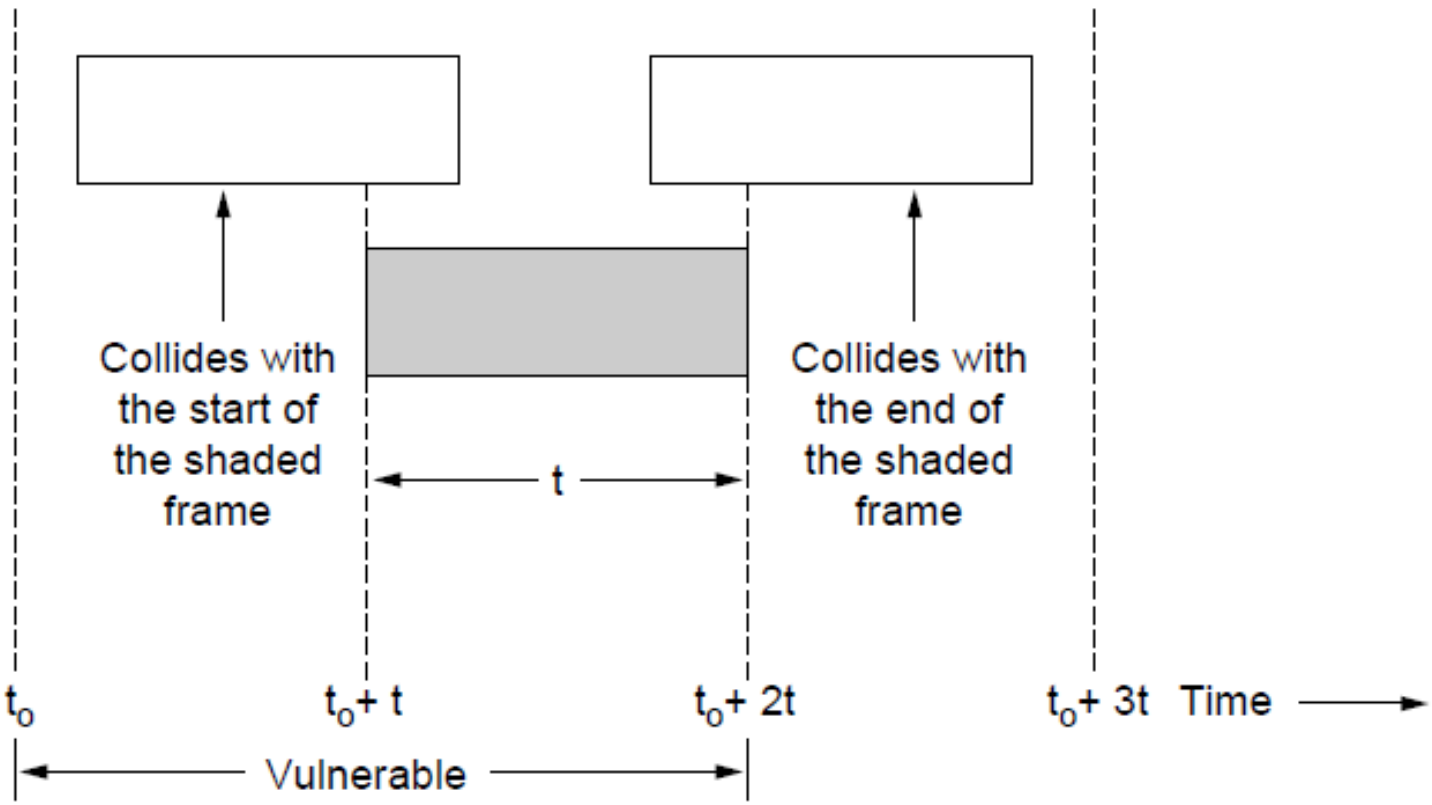

Vulnerable period for the shaded frame.

ALOHA (3)

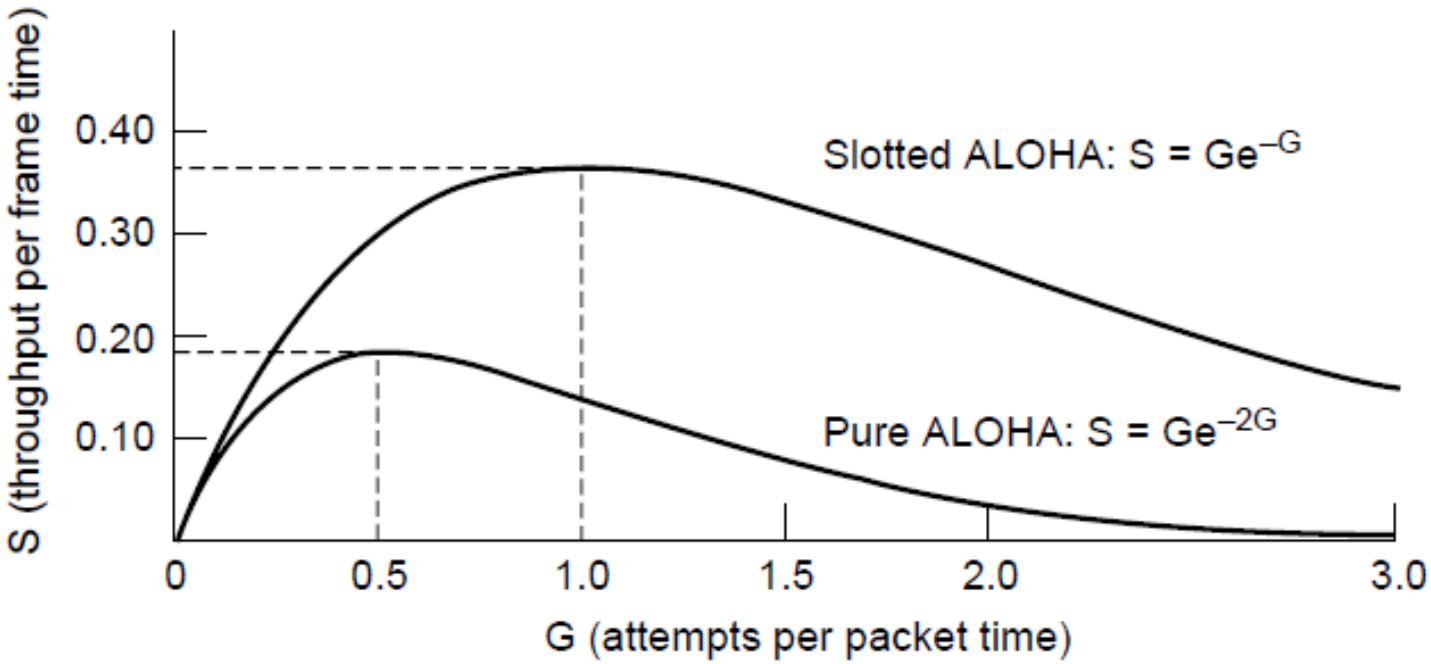

Throughput versus offered traffic for ALOHA systems.

Persistent and Nonpersistent CSMA

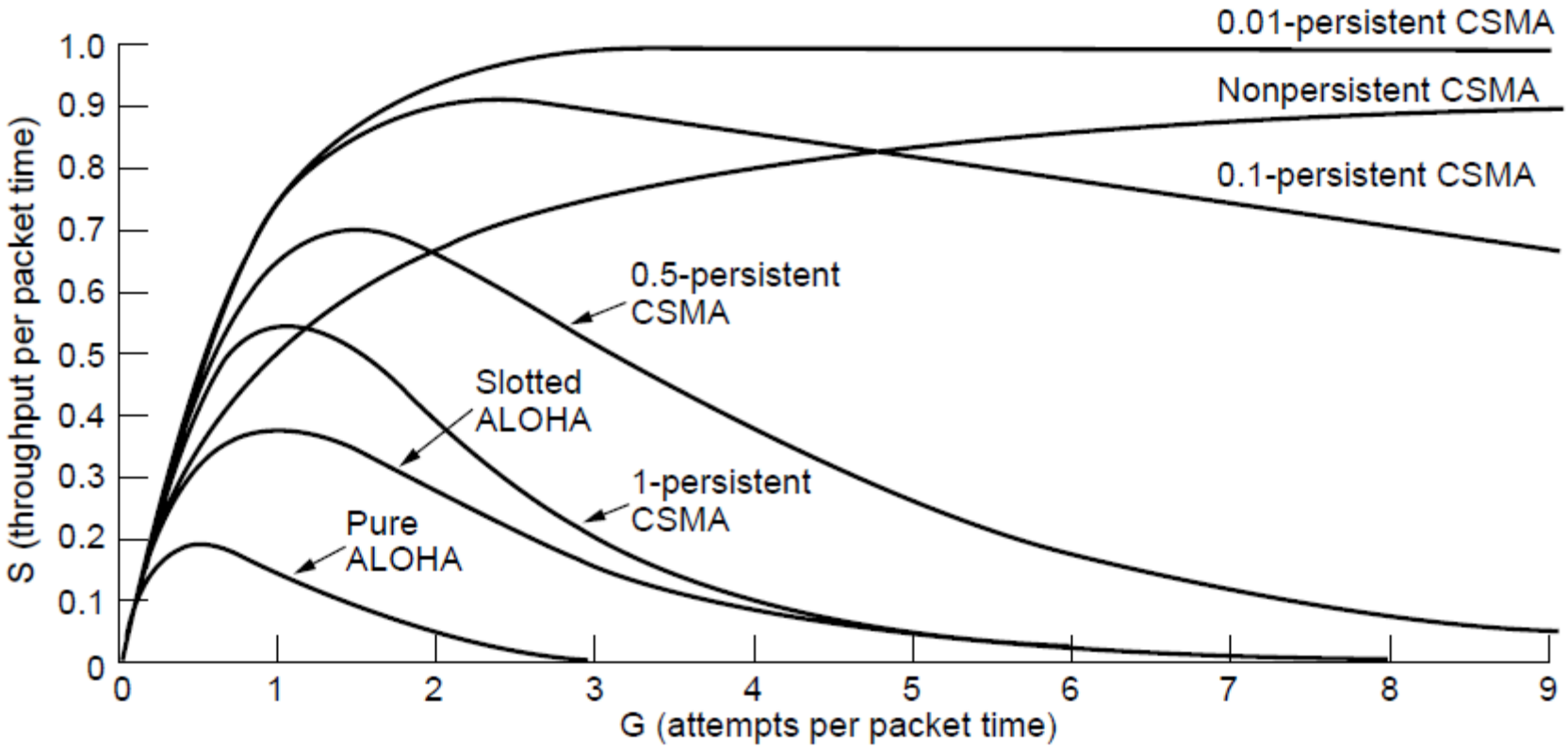

Comparison of the channel utilization versus load for various random access protocols.

CSMA with Collision Detection

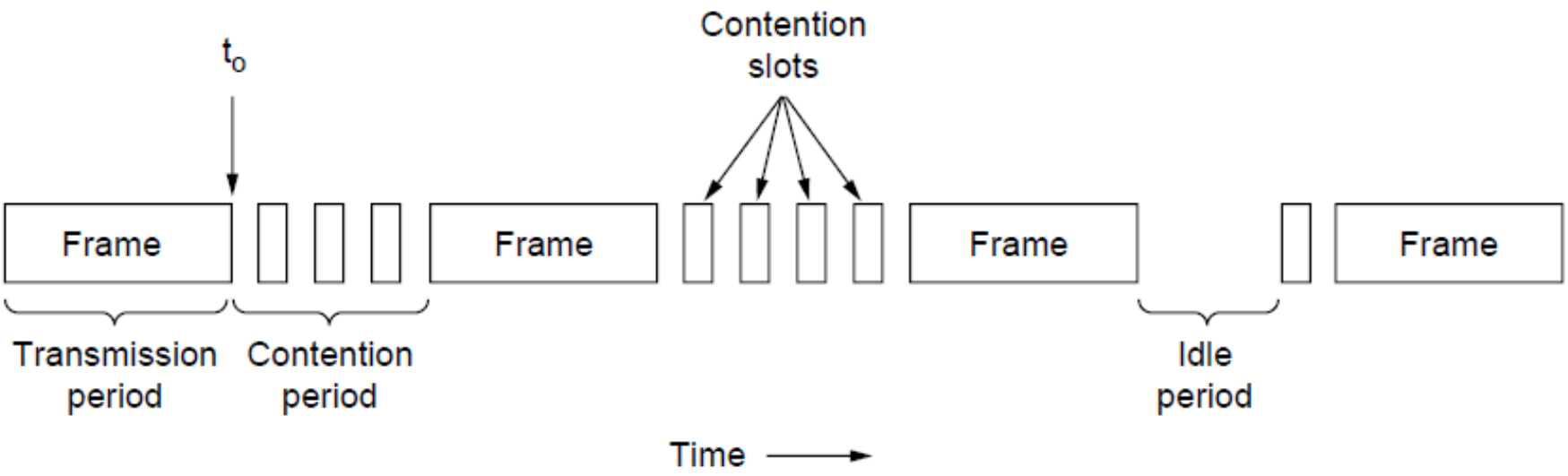

CSMA/CD can be in one of three states: contention, transmission, or idle.

Collision-Free Protocols (1)

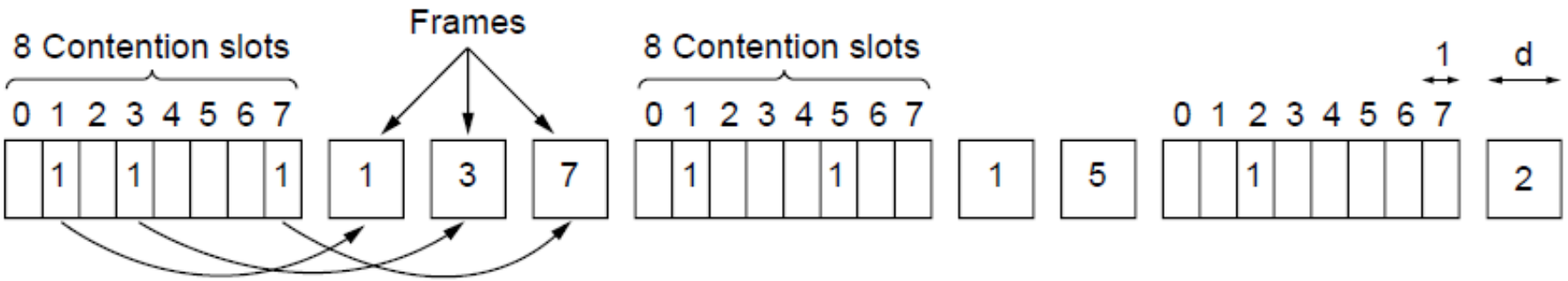

The basic bit-map protocol.

Collision-Free Protocols (2)

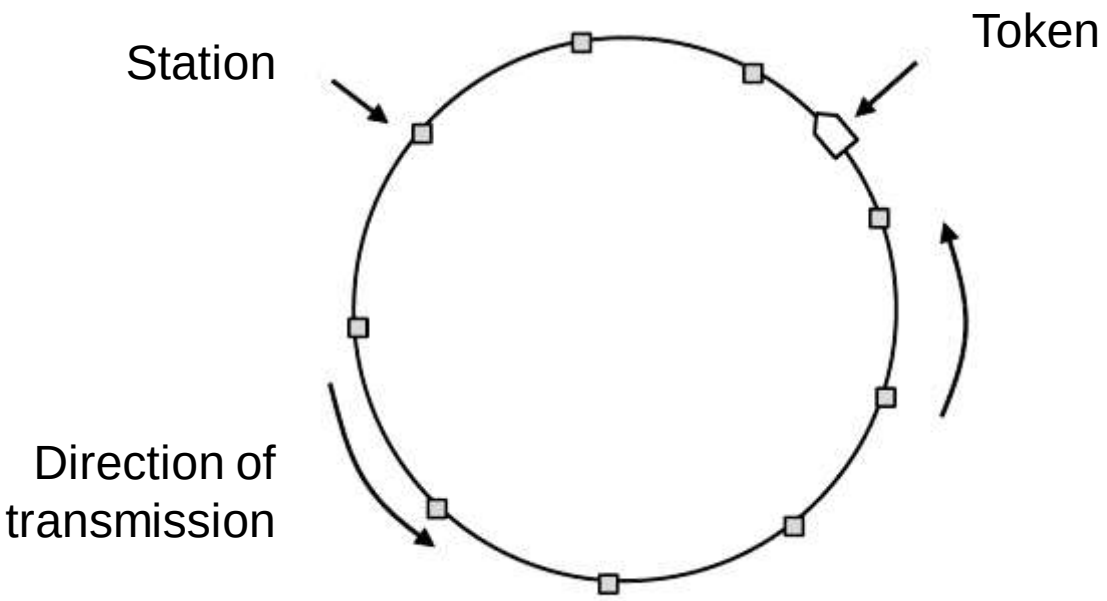

Token ring.

Binary Countdown

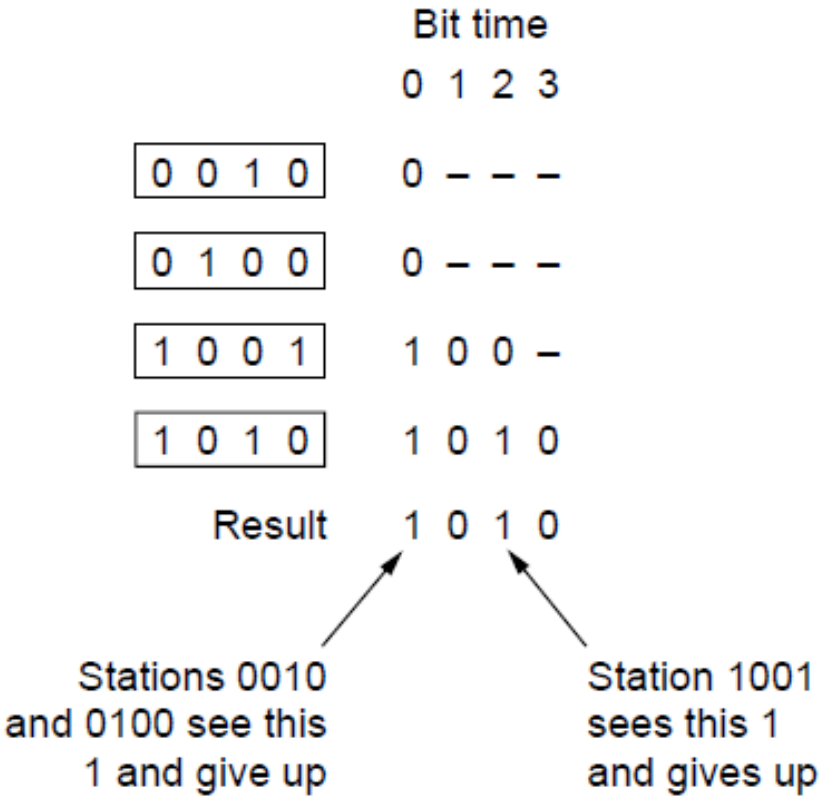

The binary countdown protocol. A dash indicates silence.

Limited-Contention Protocols

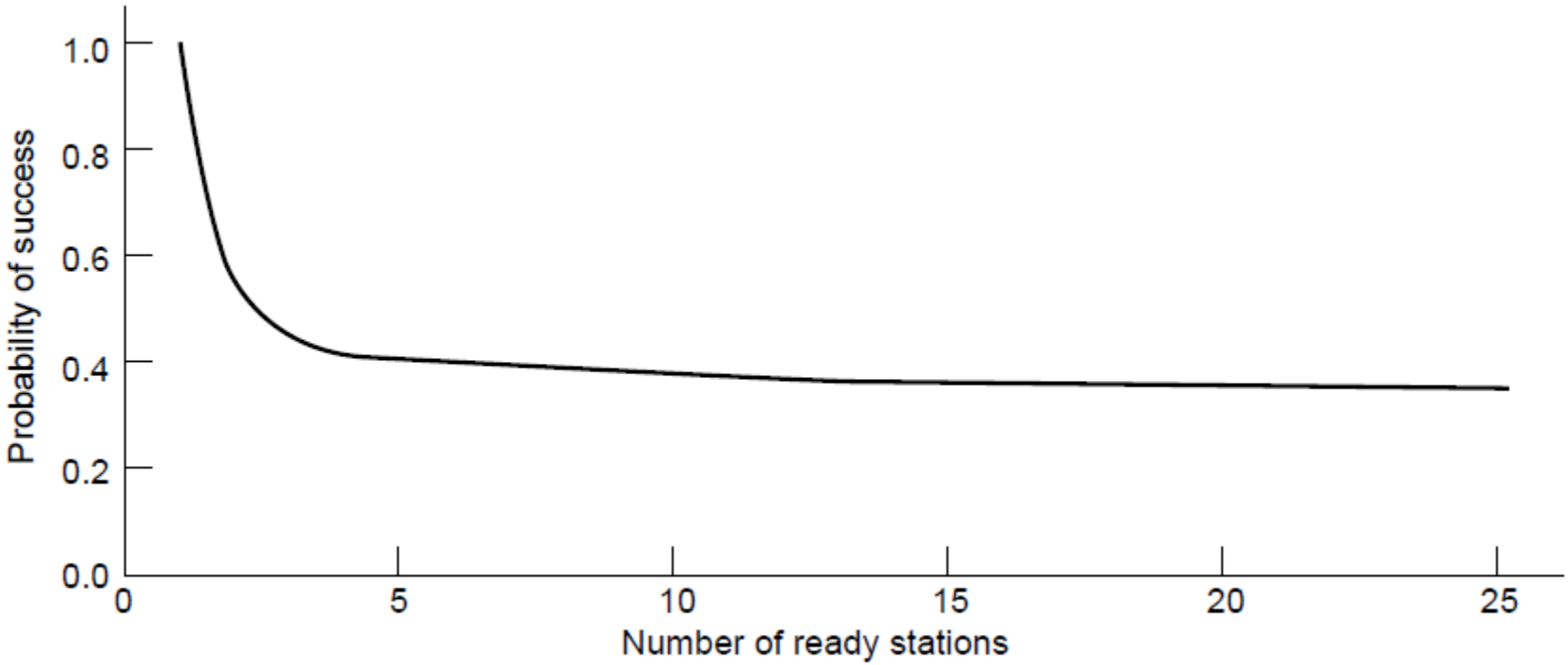

Acquisition probability for a symmetric contention channel.

The Adaptive Tree Walk Protocol

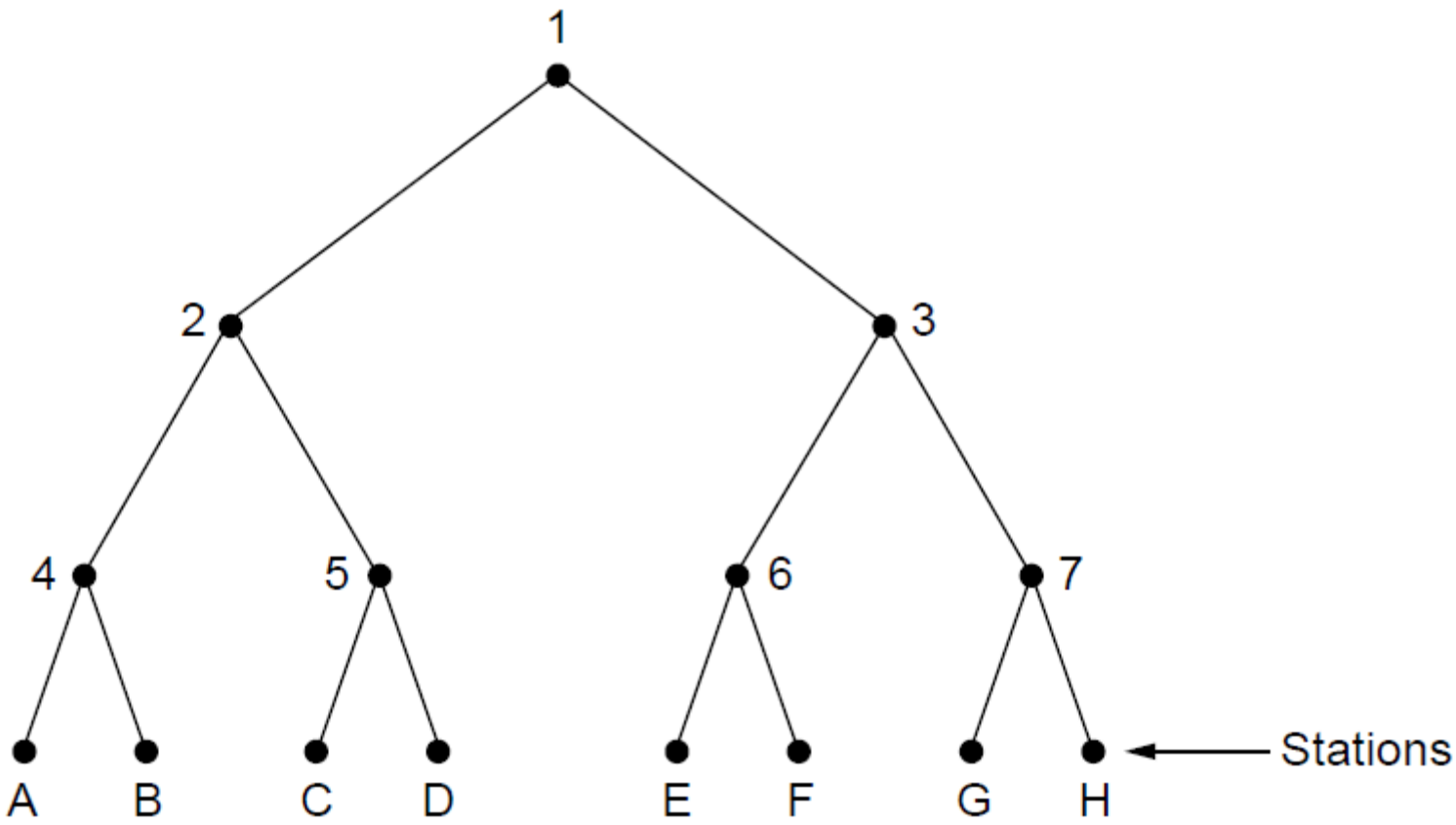

The tree for eight stations

Wireless LAN Protocols (1)

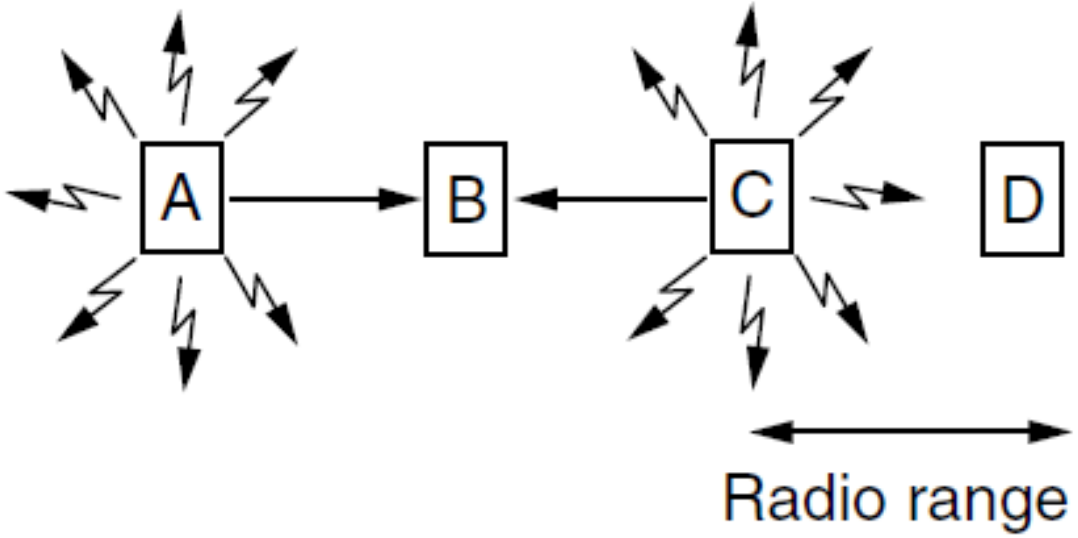

(a)

A wireless LAN. (a) A and C are hidden terminals when transmitting to B.

Wireless LAN Protocols (2)

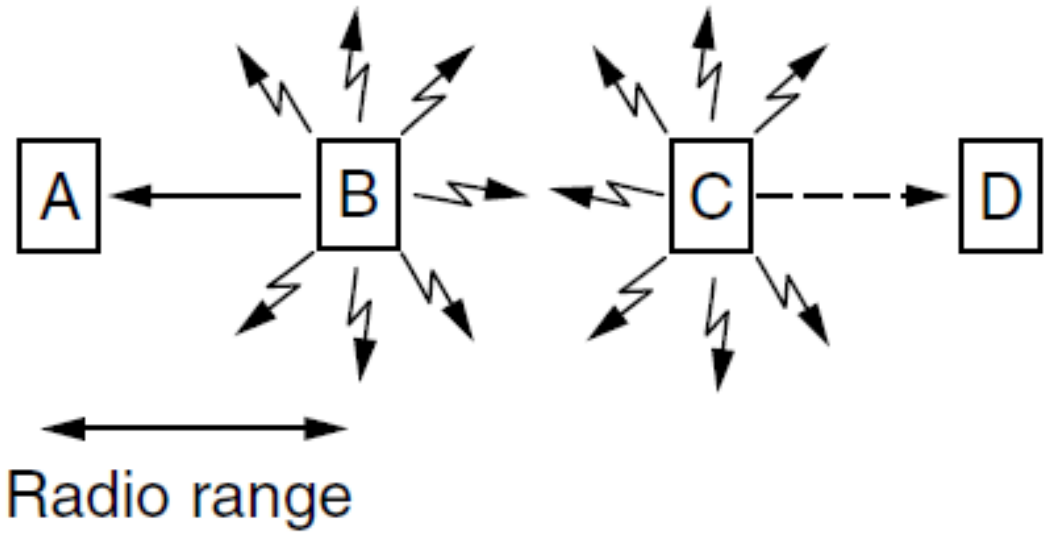

(b)

A wireless LAN. (b) B and C are exposed terminals when transmitting to A and D.

Wireless LAN Protocols (3)

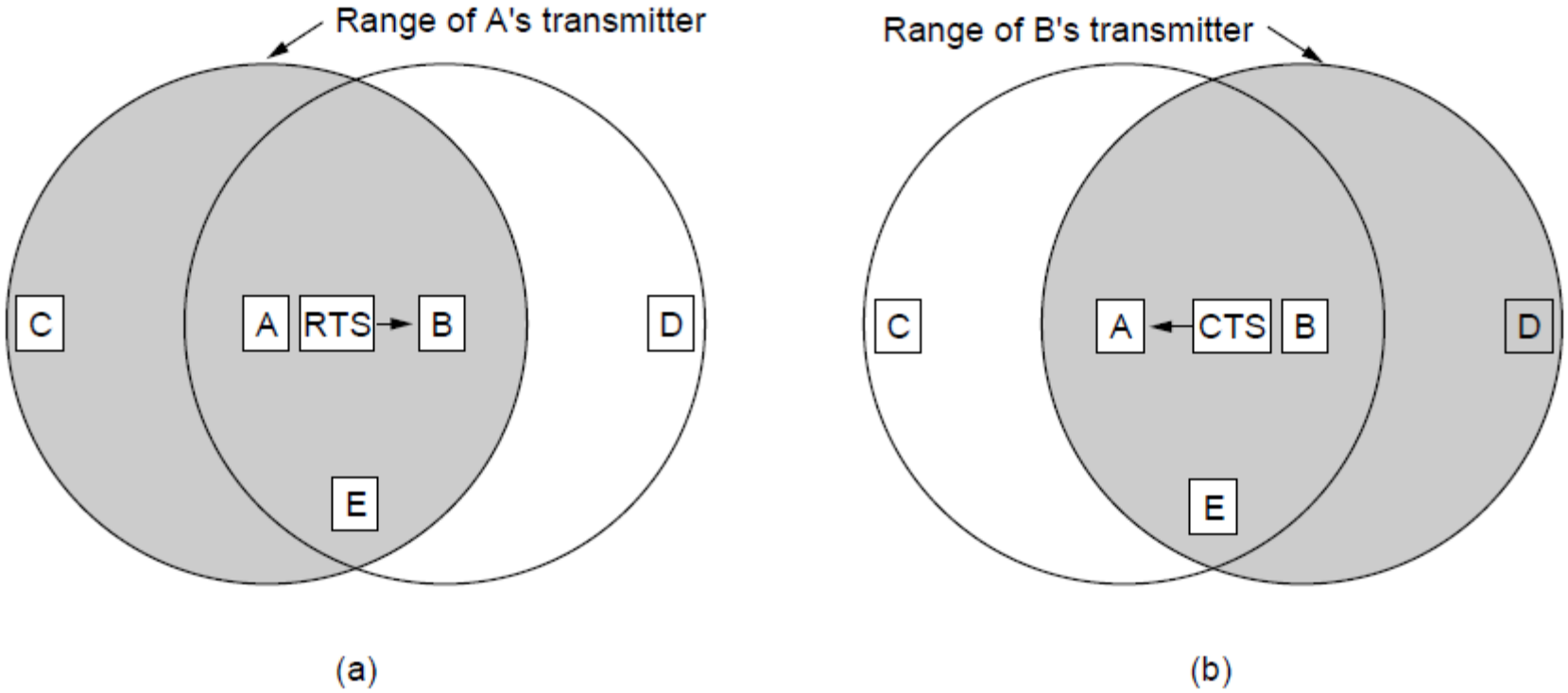

The MACA protocol. (a) *A sending an RTS to B. (b) B responding* with a CTS to *A.*

Ethernet

- Physical layer
- MAC sublayer protocol
- Ethernet performance
- Switched Ethernet
- Fast Ethernet
- Gigabit Ethernet
- 10 Gigabit Ethernet
- IEEE 802.2: Logical Link Control
- Retrospective on Ethernet

Classic Ethernet Physical Layer

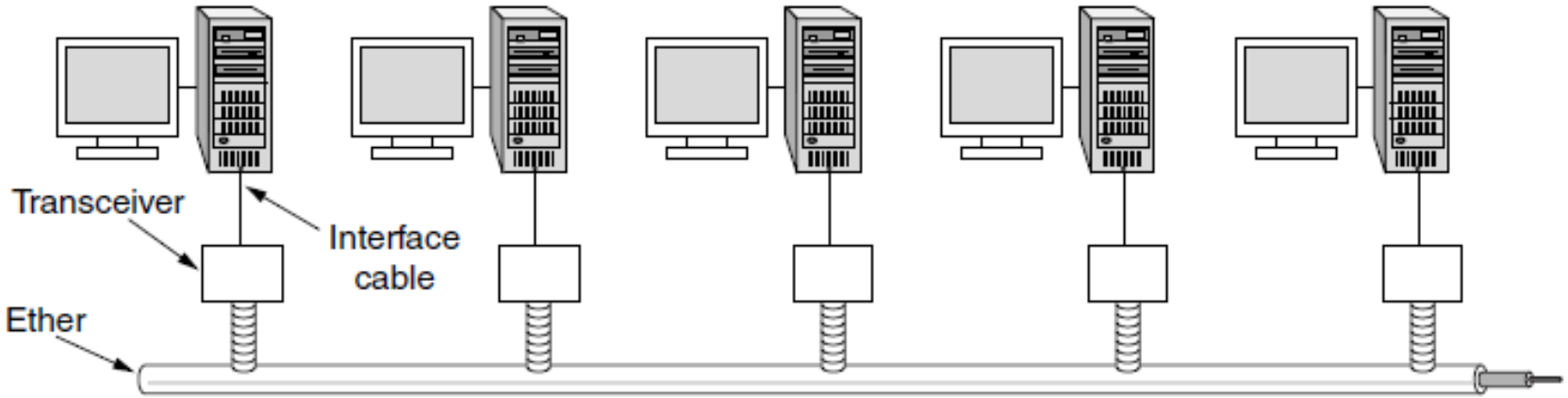

Architecture of classic Ethernet

MAC Sublayer Protocol (1)

Bytes	8		6	6	2	0-1500	0-46	4
(a)	Preamble		Destination address	Source address	Type	Data	Pad	Check-sum
(b)	Preamble	SoF	Destination address	Source address	Length	Data	Pad	Check-sum

Frame formats. (a) Ethernet (DIX). (b) IEEE 802.3.

MAC Sublayer Protocol (2)

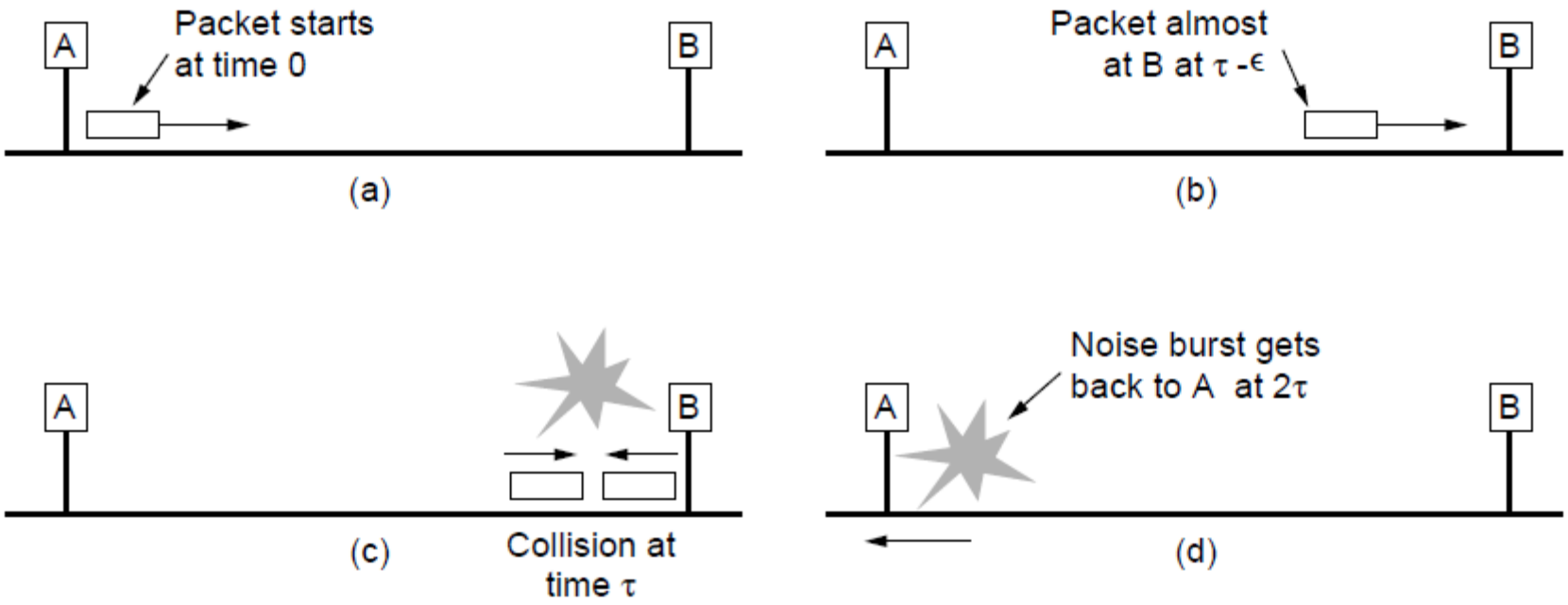

Collision detection can take as long as 2τ.

Ethernet Performance

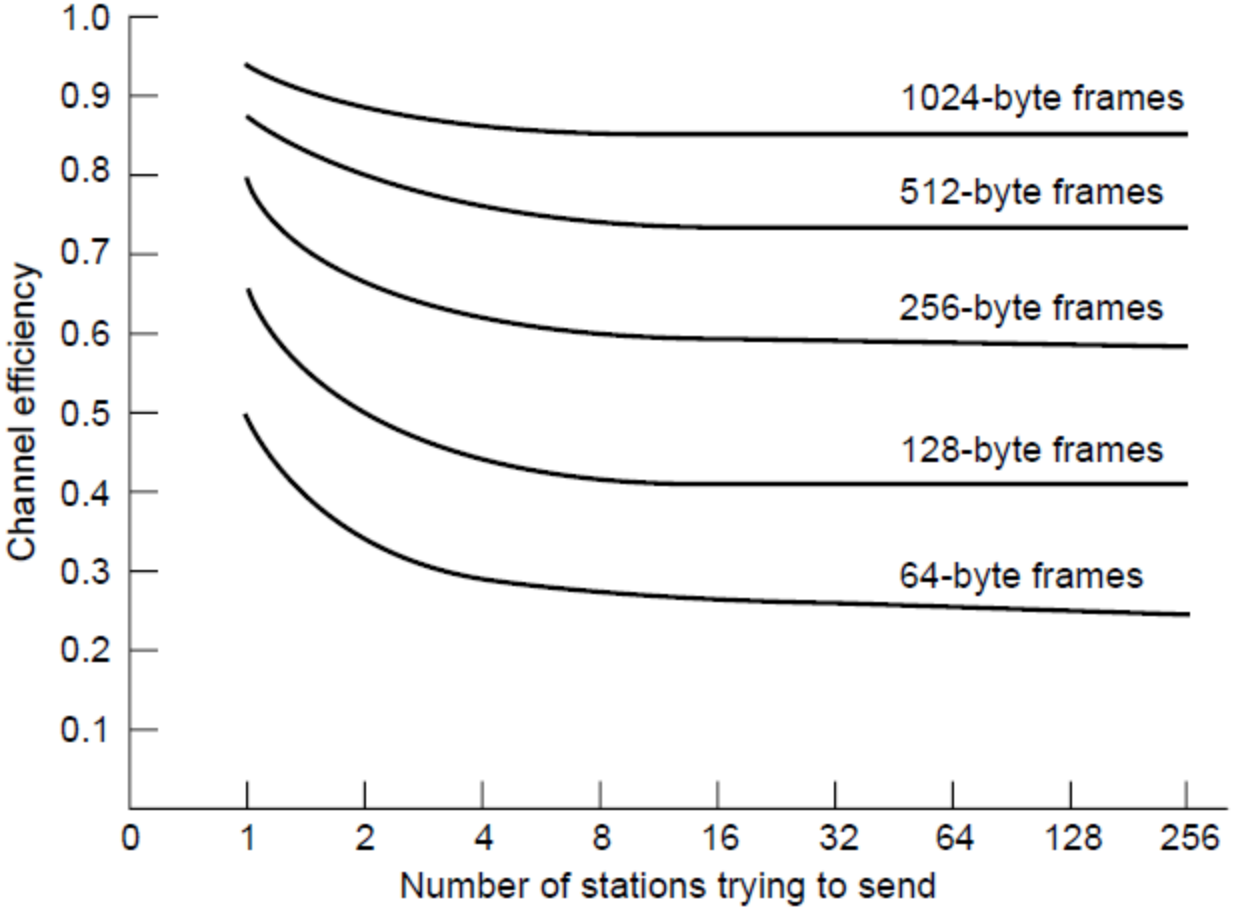

Efficiency of Ethernet at 10 Mbps with 512-bit slot times.

Switched Ethernet (1)

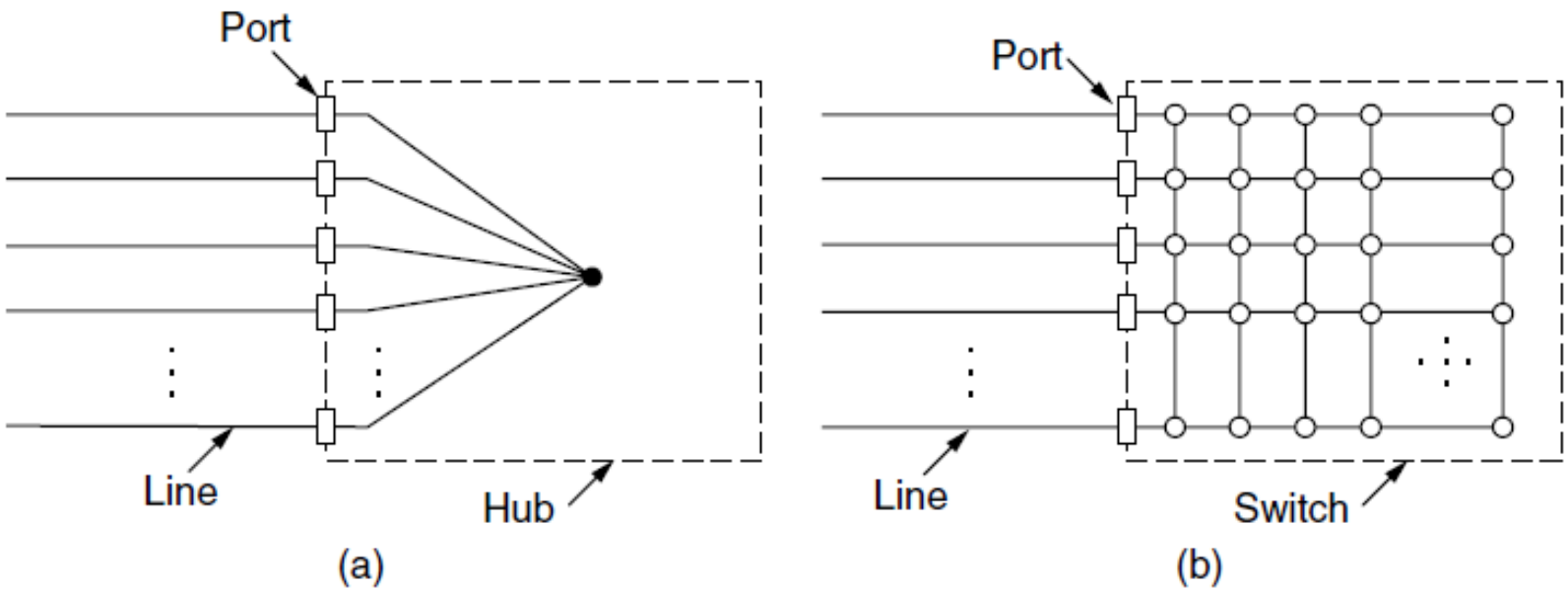

(a) Hub. (b) Switch.

Switched Ethernet (2)

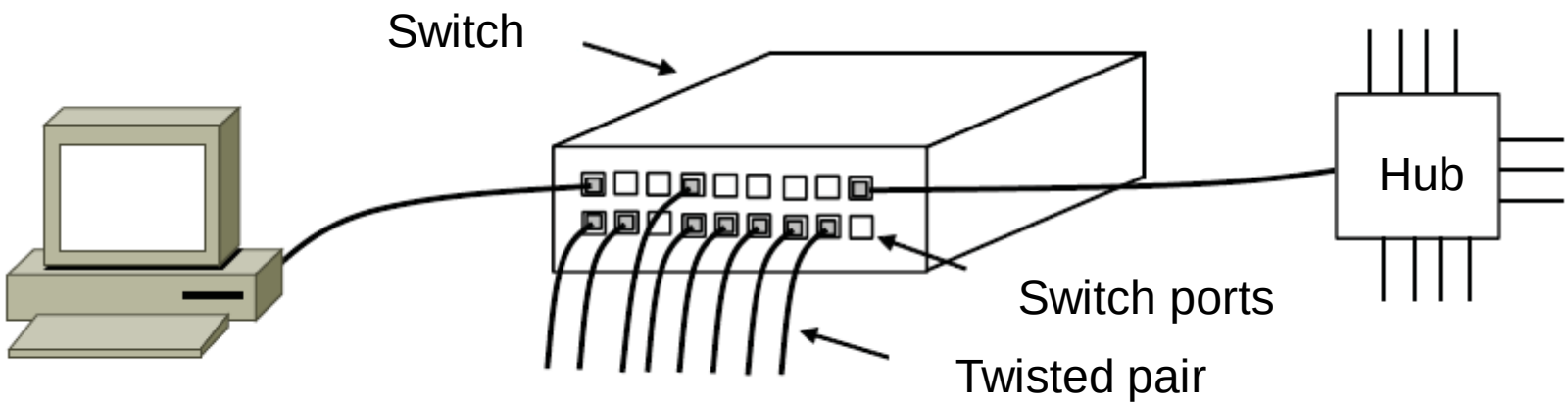

An Ethernet switch.

Fast Ethernet

Name	Cable	Max. segment	Advantages
100Base-T4	Twisted pair	100 m	Uses category 3 UTP
100Base-TX	Twisted pair	100 m	Full duplex at 100 Mbps (Cat 5 UTP)
100Base-FX	Fiber optics	2000 m	Full duplex at 100 Mbps; long runs

The original fast Ethernet cabling.

Gigabit Ethernet (1)

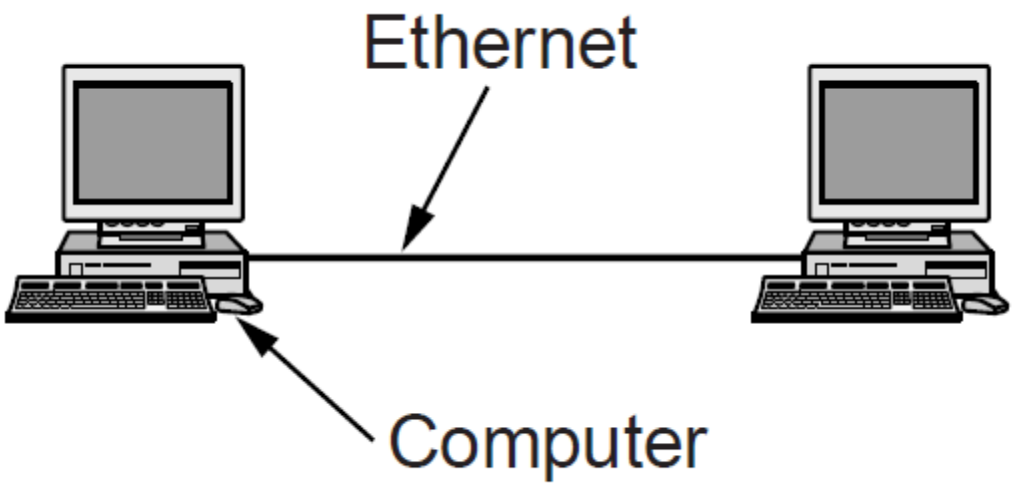

A two-station Ethernet

Gigabit Ethernet (2)

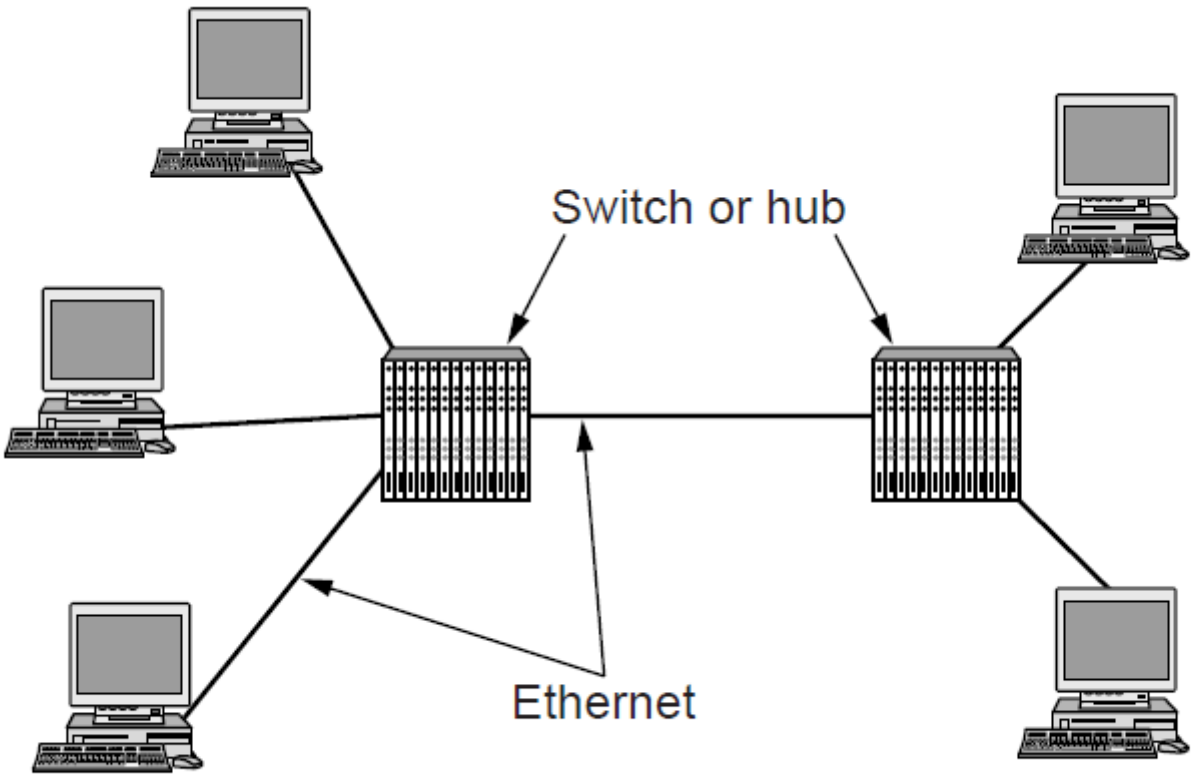

A two-station Ethernet

Gigabit Ethernet (3)

Name	Cable	Max. segment	Advantages
1000Base-SX	Fiber optics	550 m	Multimode fiber (50, 62.5 microns)
1000Base-LX	Fiber optics	5000 m	Single (10 μ) or multimode (50, 62.5 μ)
1000Base-CX	2 Pairs of STP	25 m	Shielded twisted pair
1000Base-T	4 Pairs of UTP	100 m	Standard category 5 UTP

Gigabit Ethernet cabling.

10 Gigabit Ethernet

Name	Cable	Max. segment	Advantages
10GBase-SR	Fiber optics	Up to 300 m	Multimode fiber (0.85μ)
10GBase-LR	Fiber optics	10 km	Single-mode fiber (1.3μ)
10GBase-ER	Fiber optics	40 km	Single-mode fiber (1.5μ)
10GBase-CX4	4 Pairs of twinax	15 m	Twinaxial copper
10GBase-T	4 Pairs of UTP	100 m	Category 6a UTP

Gigabit Ethernet cabling

Wireless Lans

- 802.11 architecture and protocol stack
- 802.11 physical layer
- 802.11 MAC sublayer protocol
- 802.11 frame structure
- Services

802.11 Architecture and Protocol Stack (1)

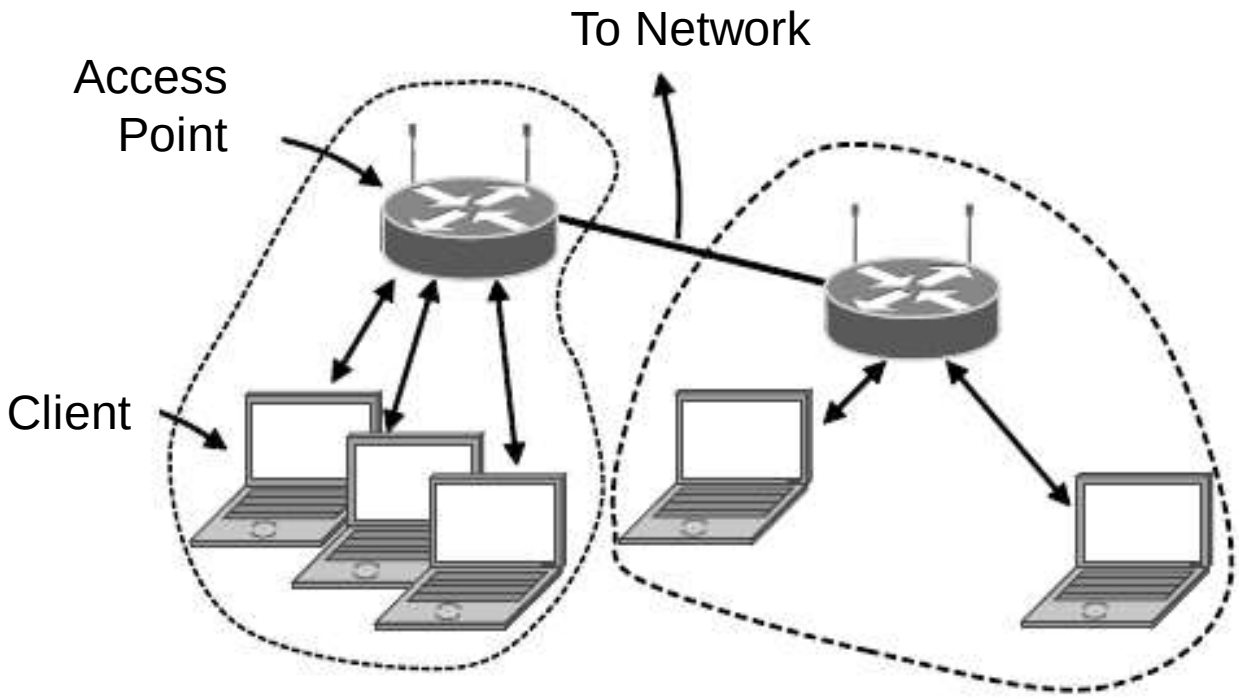

802.11 architecture – infrastructure mode

802.11 Architecture and Protocol Stack (2)

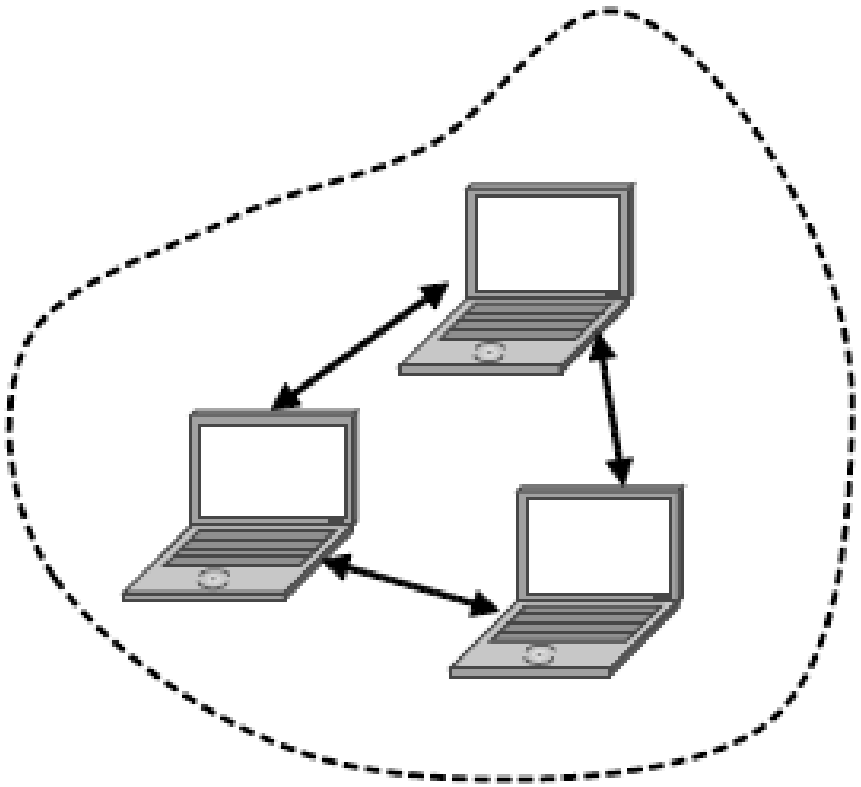

802.11 architecture – ad-hoc mode

802.11 Architecture and Protocol Stack (3)

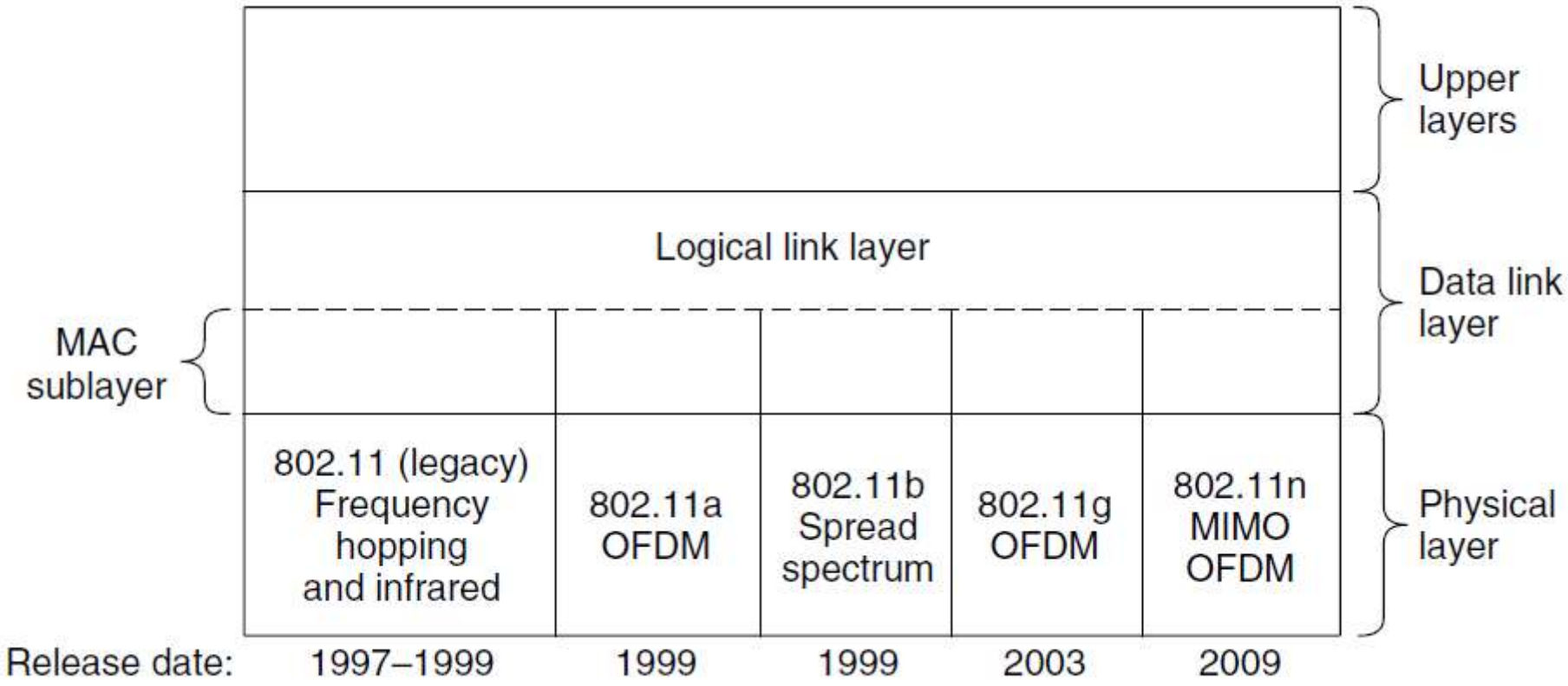

Part of the 802.11 protocol stack.

The 802.11 MAC Sublayer Protocol (1)

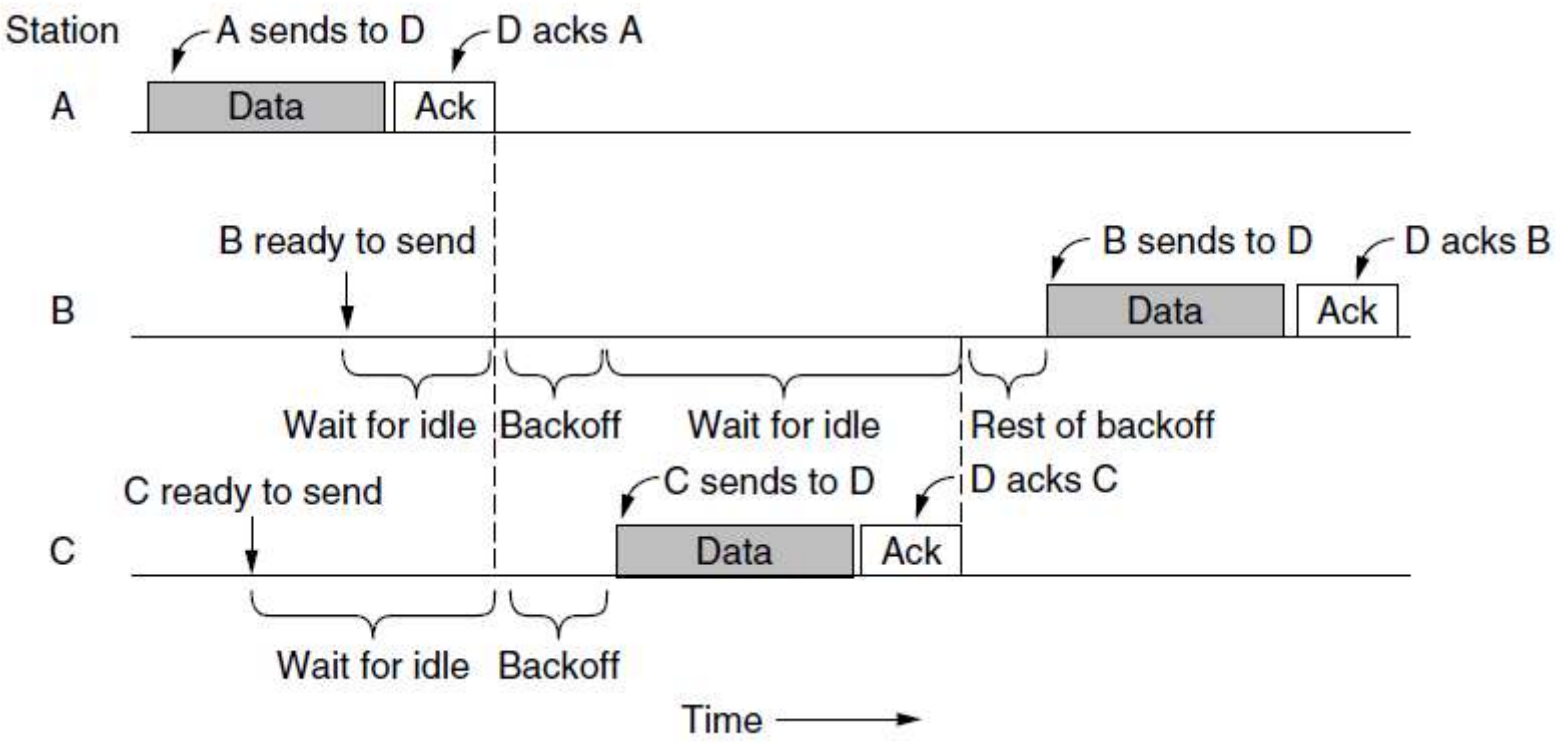

Sending a frame with CSMA/CA.

The 802.11 MAC Sublayer Protocol (2)

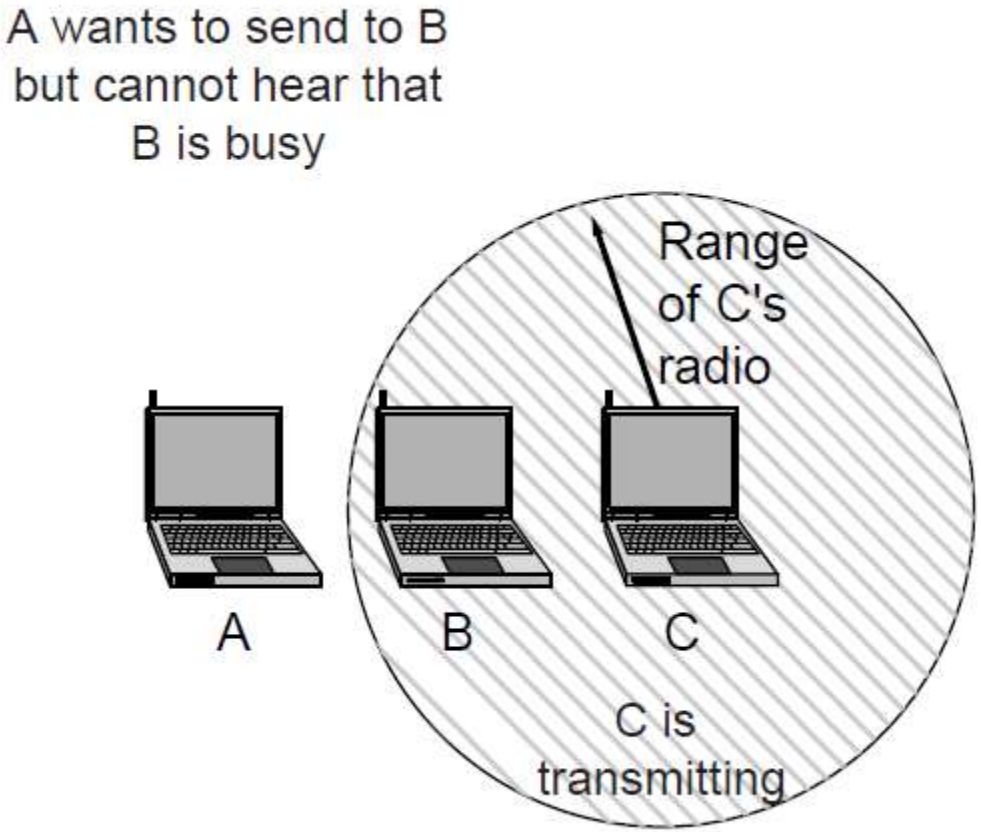

The hidden terminal problem.

The 802.11 MAC Sublayer Protocol (3)

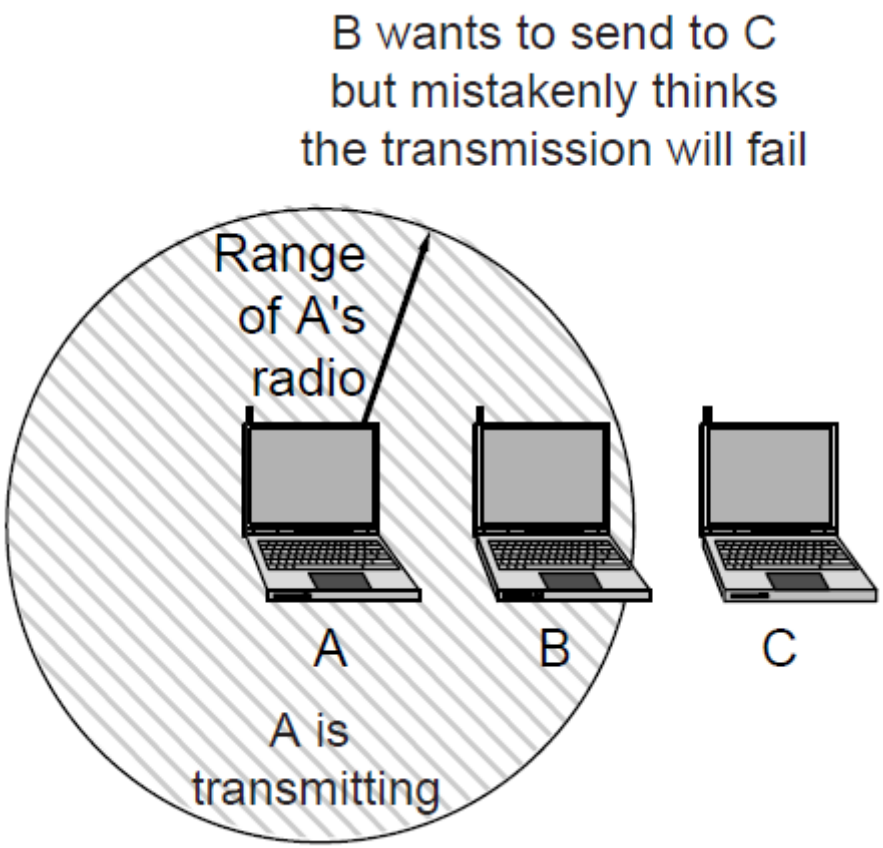

The exposed terminal problem.

The 802.11 MAC Sublayer Protocol (4)

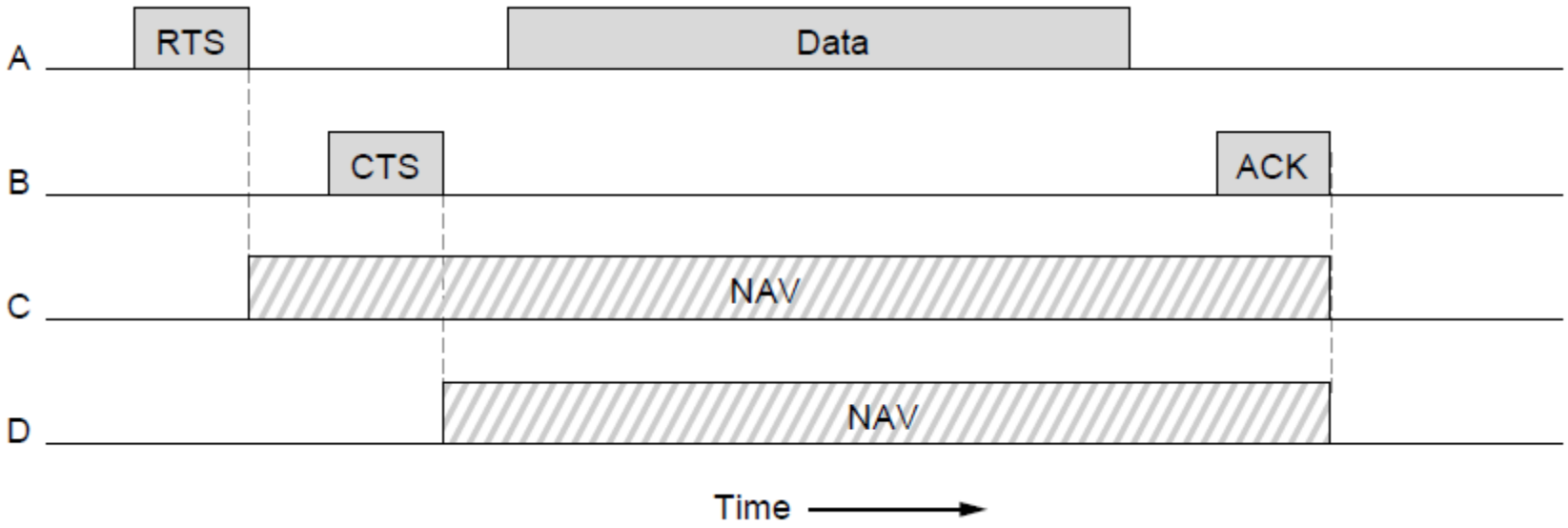

The use of virtual channel sensing using CSMA/CA.

The 802.11 MAC Sublayer Protocol (5)

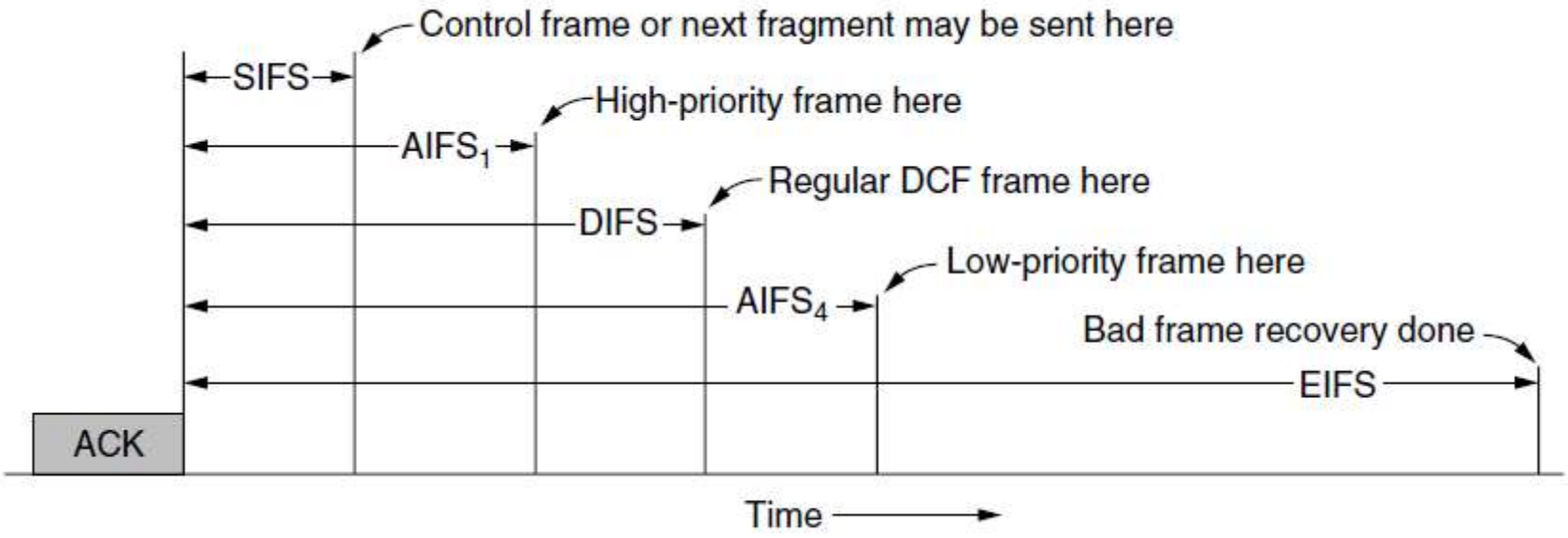

Interframe spacing in 802.11

802.11 Frame Structure

Bytes	2	2	6	6	6	2	0–2312	4
	Frame control	Duration	Address 1 (recipient)	Address 2 (transmitter)	Address 3	Sequence	Data	Check sequence

	Version = 00	Type = 10	Subtype = 0000	To DS	From DS	More frag.	Retry	Pwr. mgt.	More data	Protected	Order
Bits	2	2	4	1	1	1	1	1	1	1	1

Format of the 802.11 data frame

Broadband Wireless

- Comparison of 802.16 with 802.11, 3G
- 802.16 architecture and protocol stack
- 802.16 physical layer
- 802.16 frame structure

Comparison of 802.16 with 802.11 and 3G

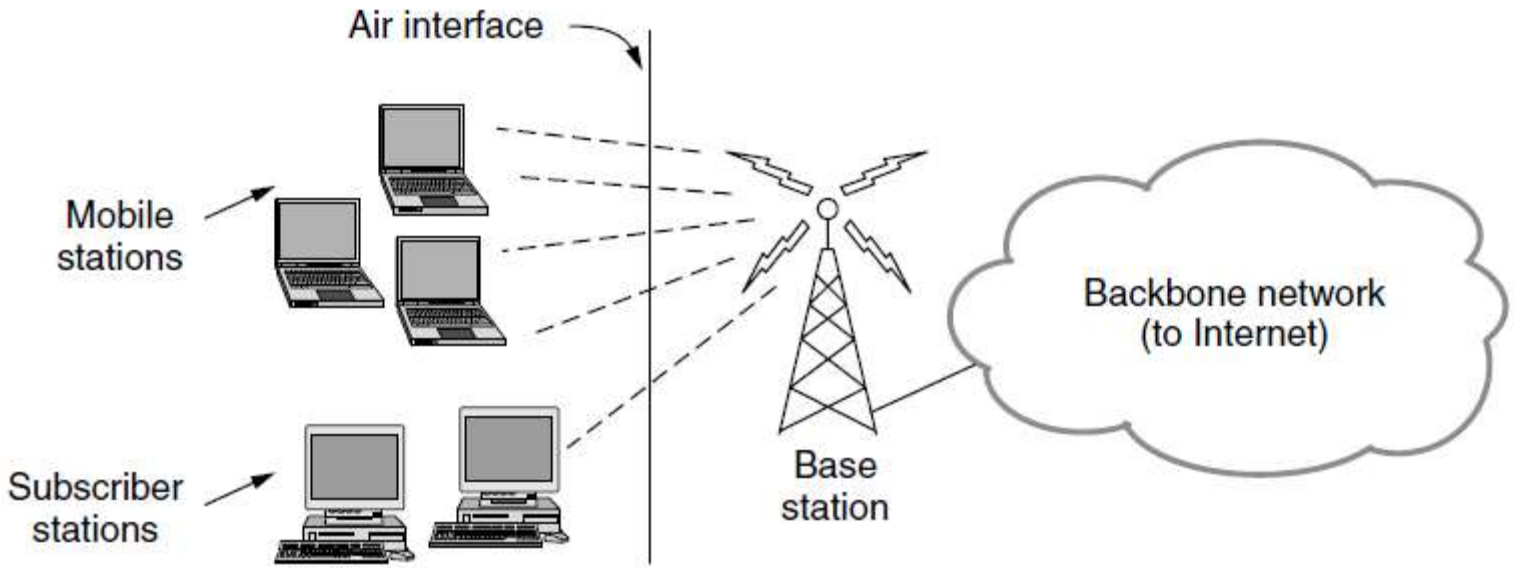

The 802.16 architecture

802.16 Architecture and Protocol Stack

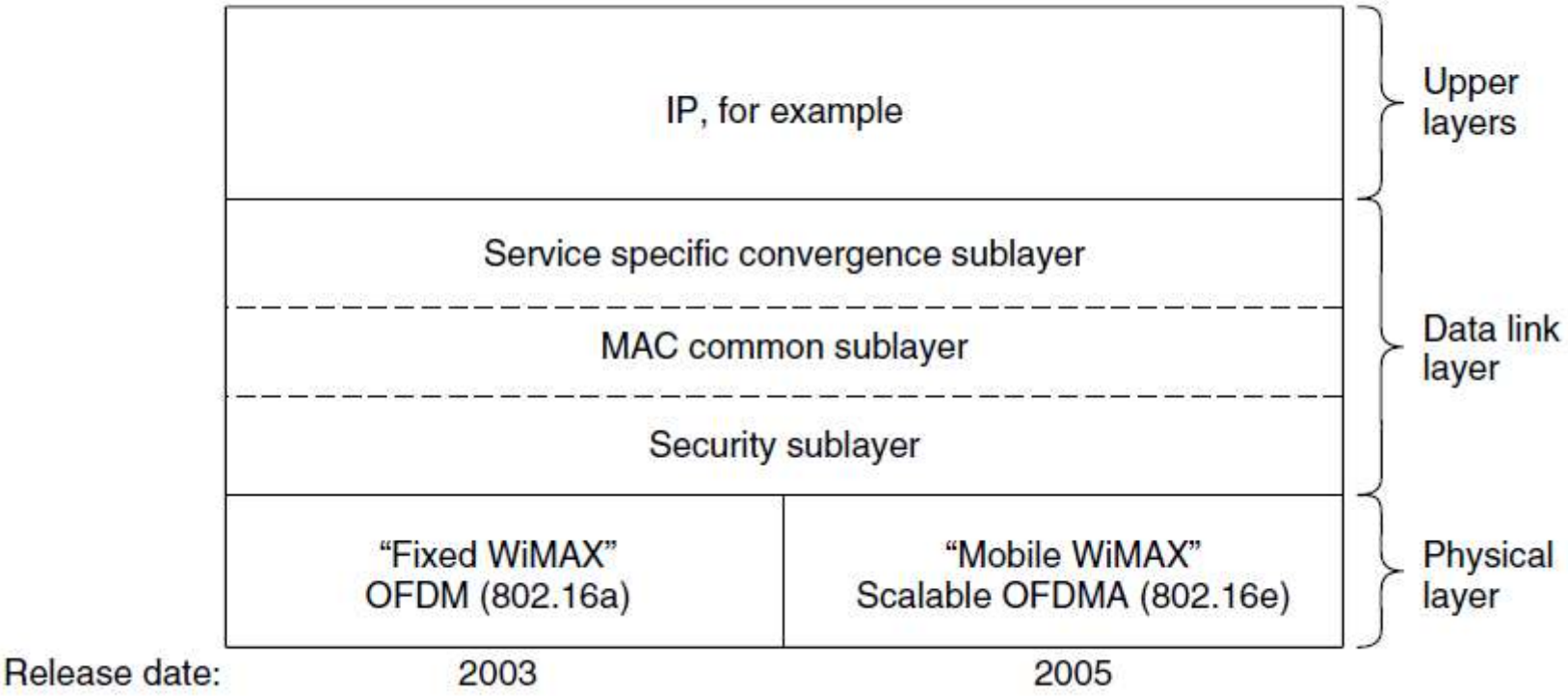

The 802.16 protocol stack

802.16 Physical Layer

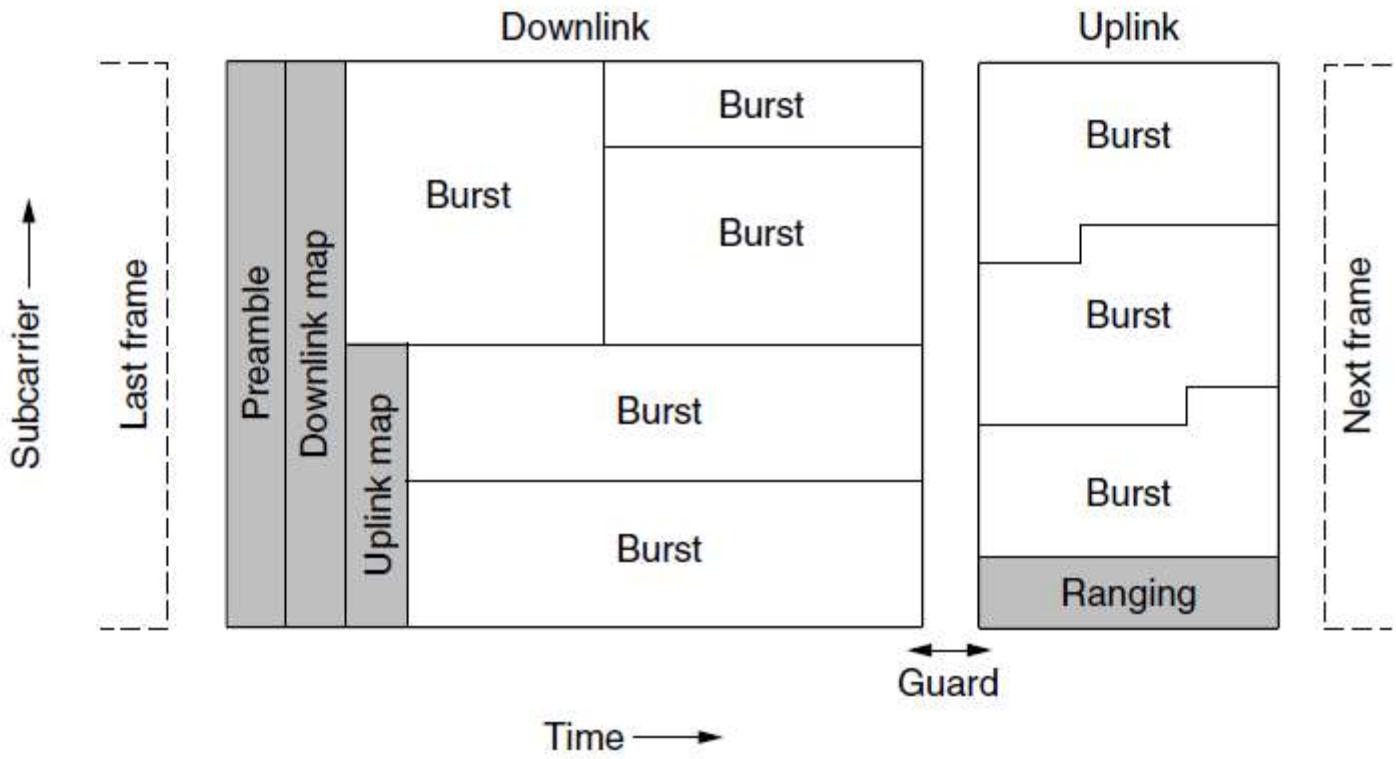

Frames structure for OFDMA with time division duplexing.

802.16 MAC Sublayer Protocol

Classes of service

1. Constant bit rate service.
2. Real-time variable bit rate service.
3. Non-real-time variable bit rate service.
4. Best-effort service.

802.16 Frame Structure

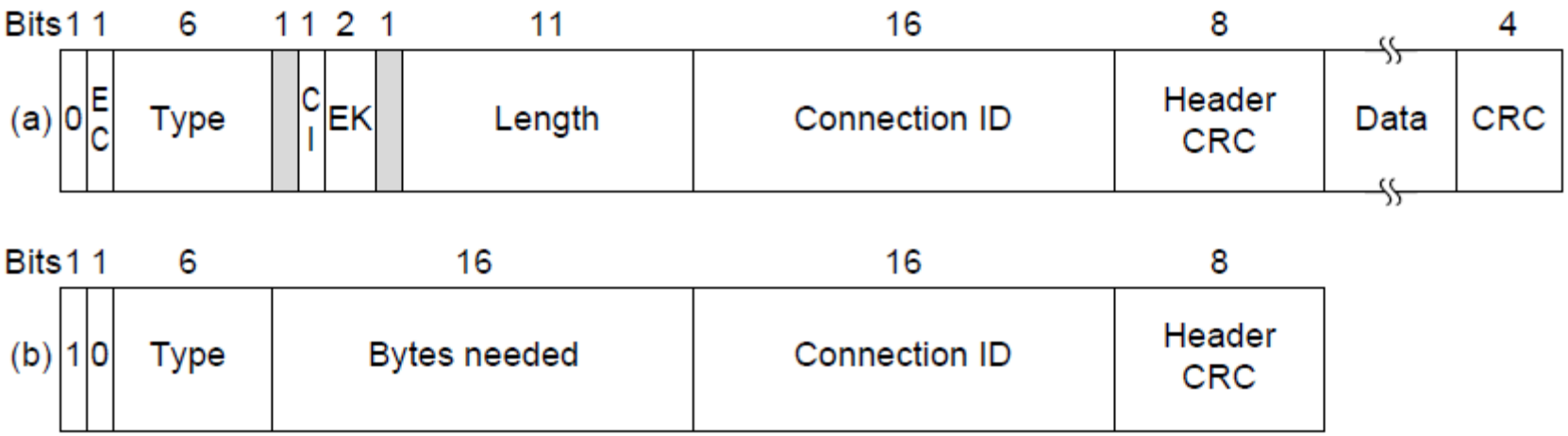

(a) A generic frame. (b) A bandwidth request frame.

Bluetooth

- Architecture
- Applications
- Protocol stack
- Radio layer
- Link layers
- Frame structure

Bluetooth Architecture

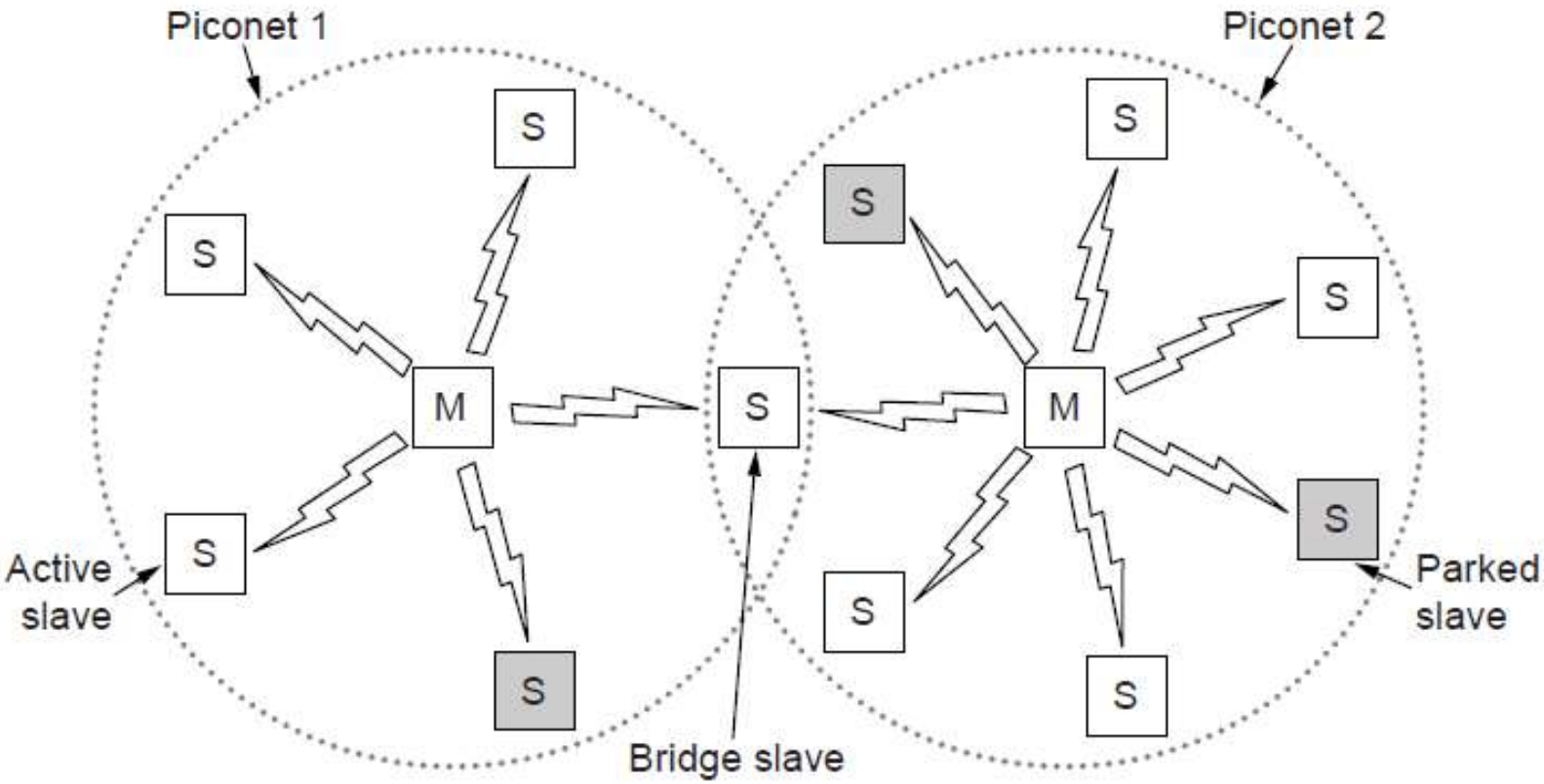

Two piconets can be connected to form a scatternet

Bluetooth Protocol Stack

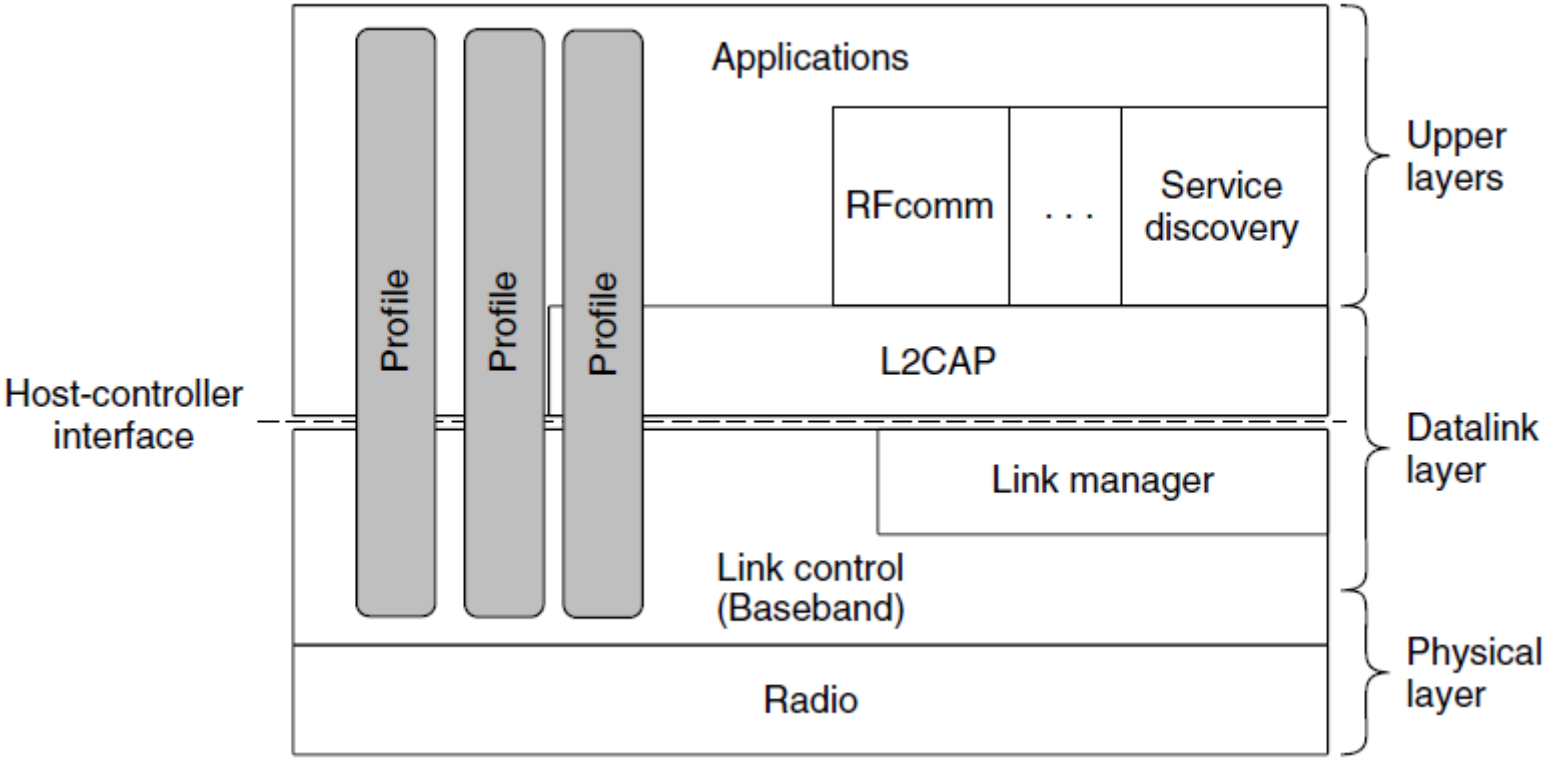

The Bluetooth protocol architecture.

Bluetooth Frame Structure

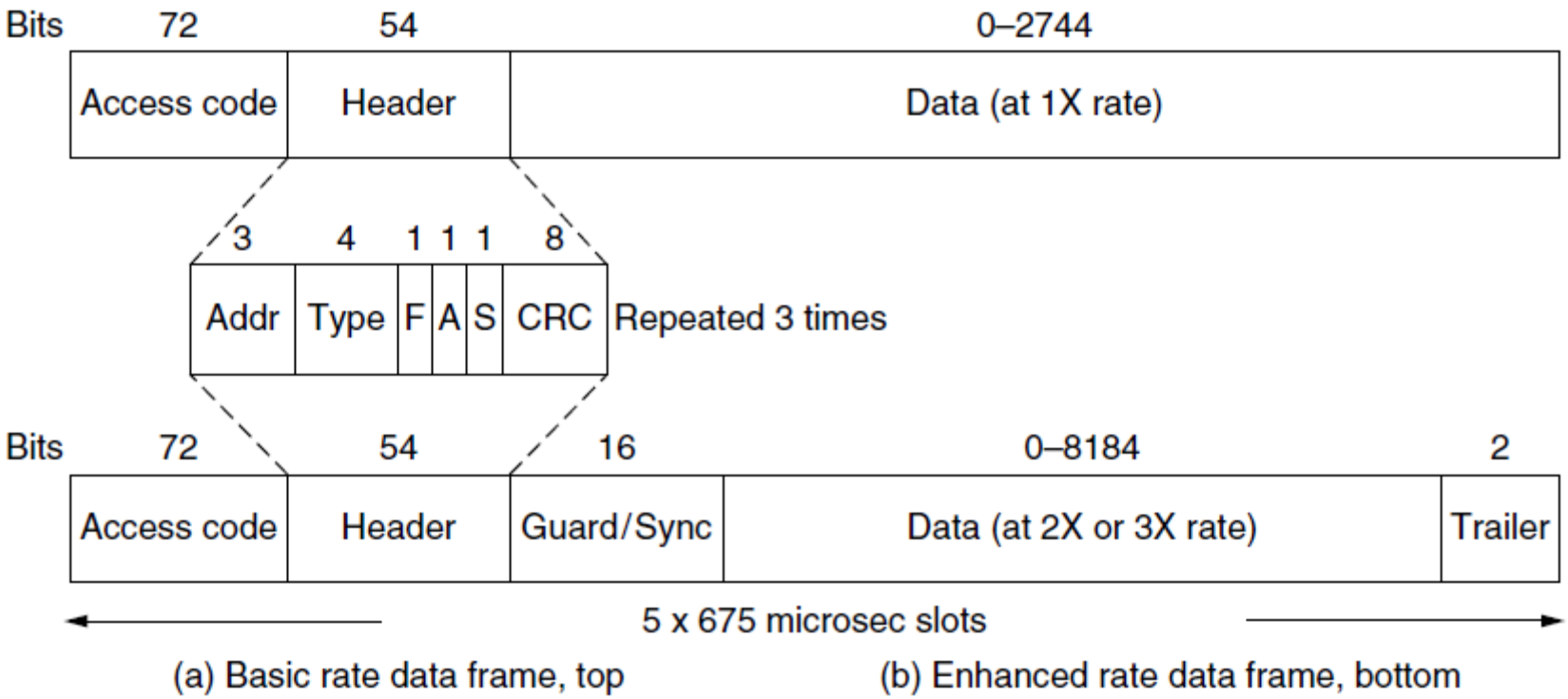

Typical Bluetooth data frame at (a) basic, and (b) enhanced, data rates.

RFID

- EPC Gen 2 architecture
- EPC Gen 2 physical layer
- EPC Gen 2 tag identification layer
- Tag identification message formats

EPC Gen 2 Architecture

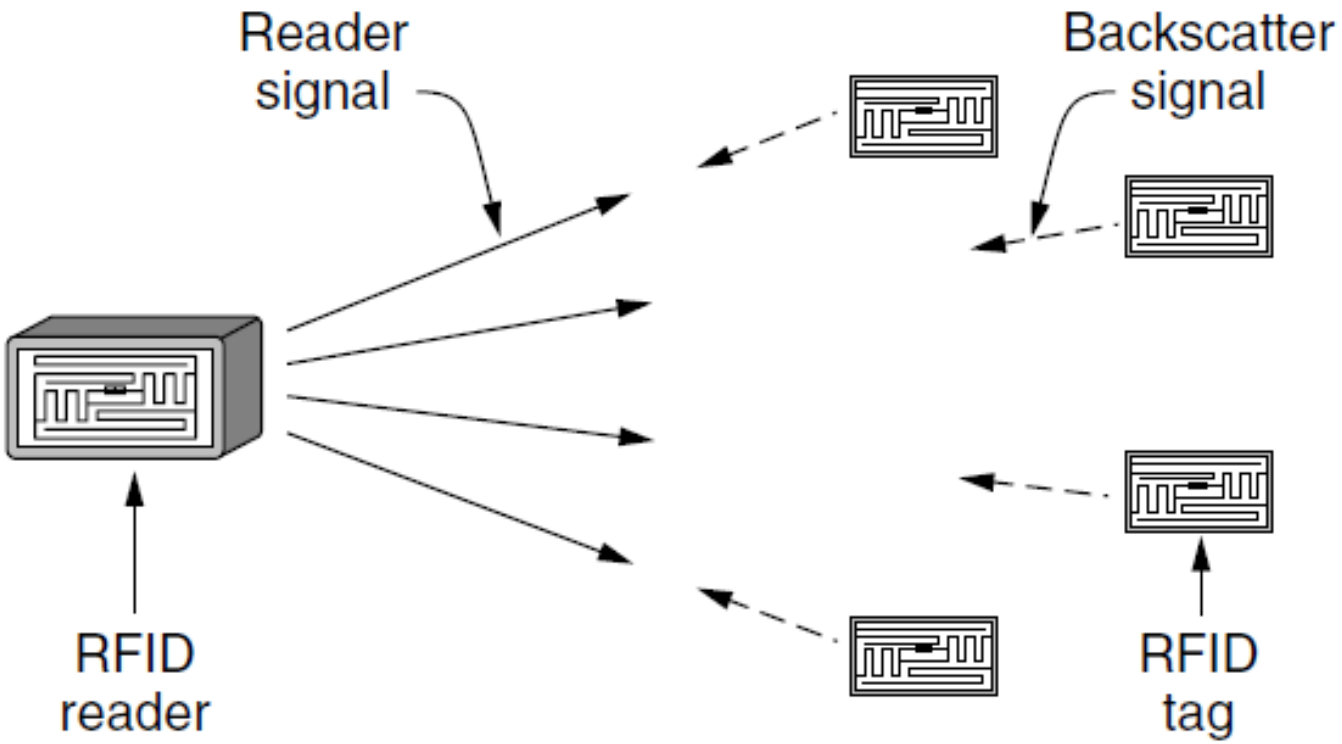

RFID architecture.

EPC Gen 2 Physical Layer

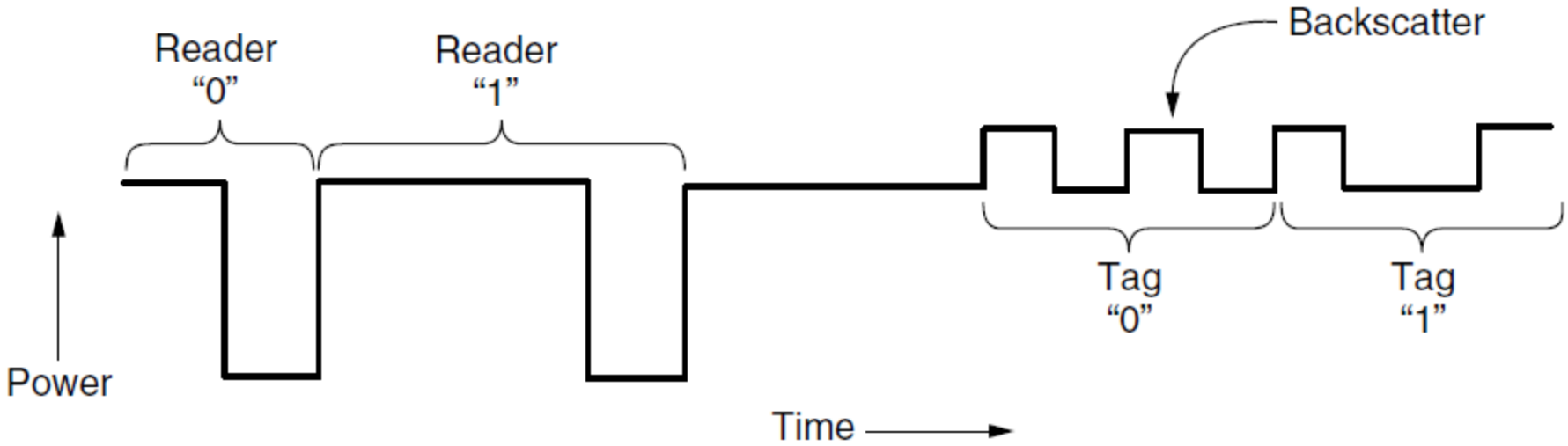

Reader and tag backscatter signals.

EPC Gen 2 Tag Identification Layer

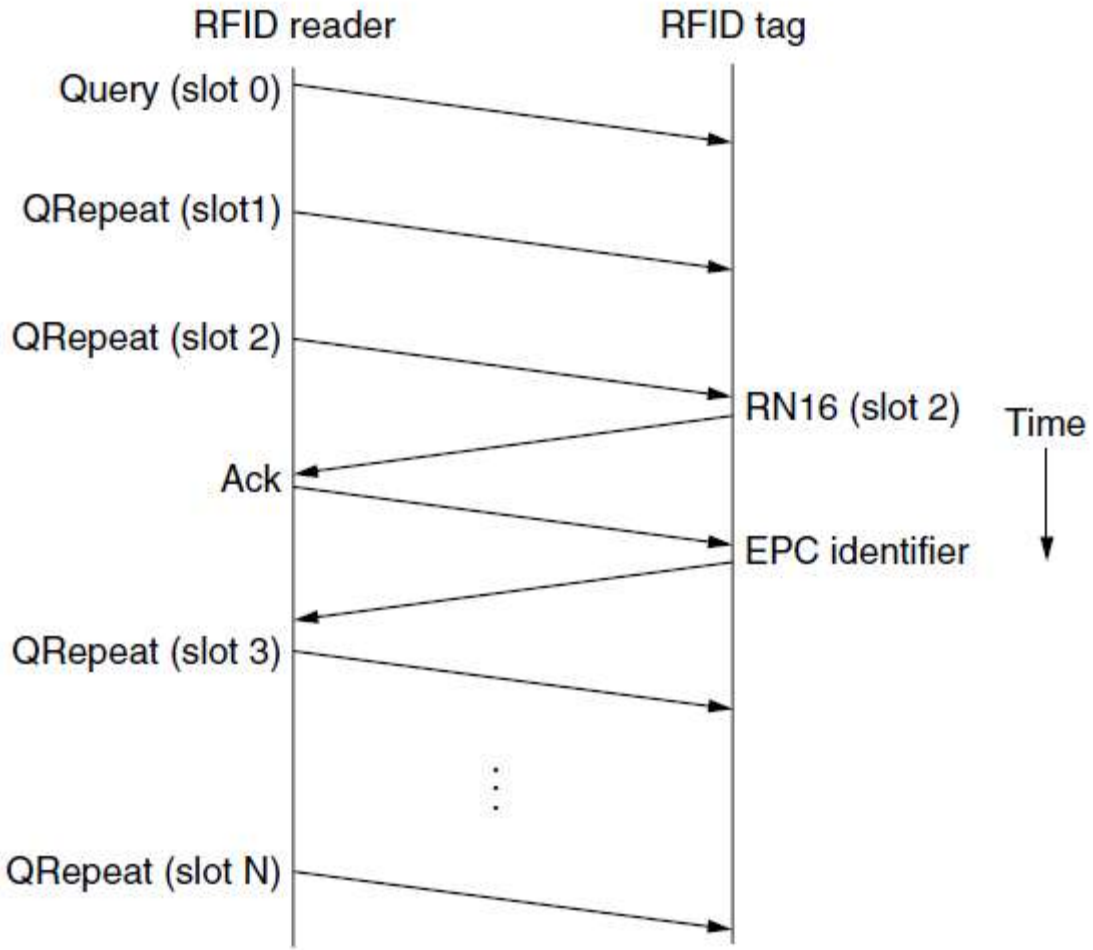

Example message exchange to identify a tag.

Computer Networks, Fifth Edition by Andrew Tanenbaum and David Wetherall, © Pearson Education-Prentice Hall, 2011

Tag Identification Message Formats

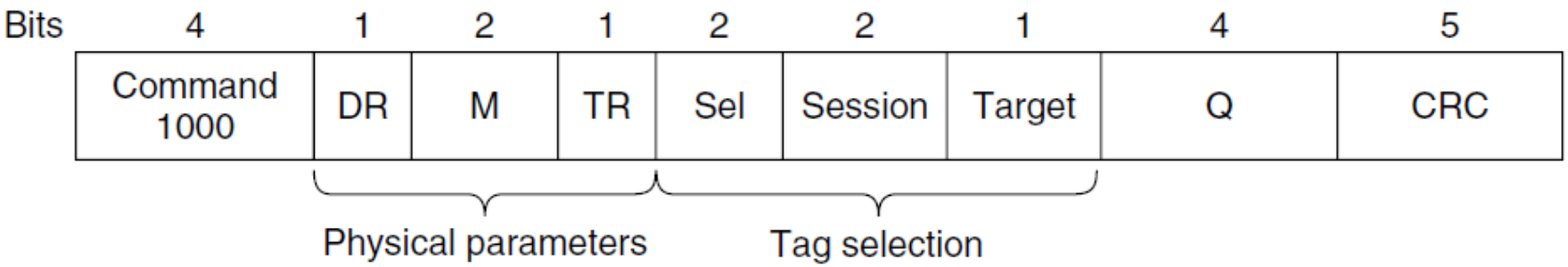

Format of the Query message.

Data Link Layer Switching

- Uses of bridges
- Learning bridges
- Spanning tree bridges
- Repeaters, hubs, bridges, switches, routers, and gateways
- Virtual LANs

Learning Bridges (1)

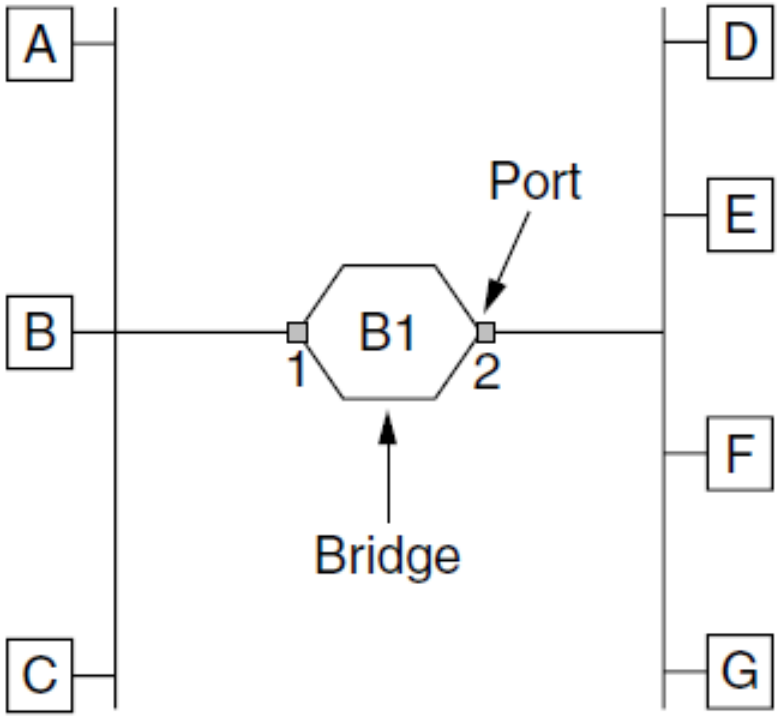

Bridge connecting two multidrop LANs

Learning Bridges (2)

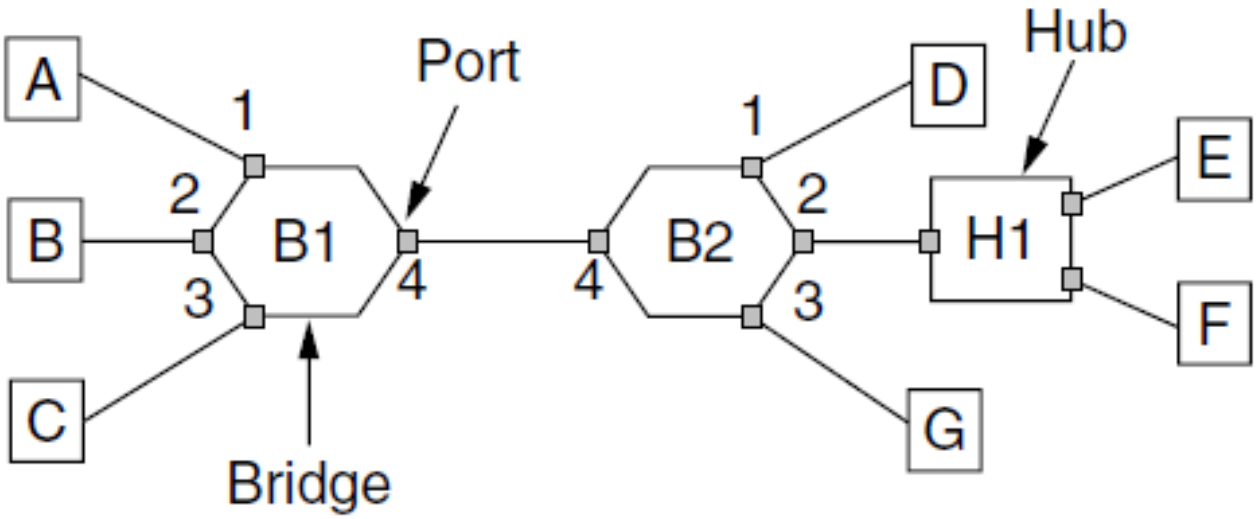

Bridges (and a hub) connecting seven point-to-point stations.

Learning Bridges (3)

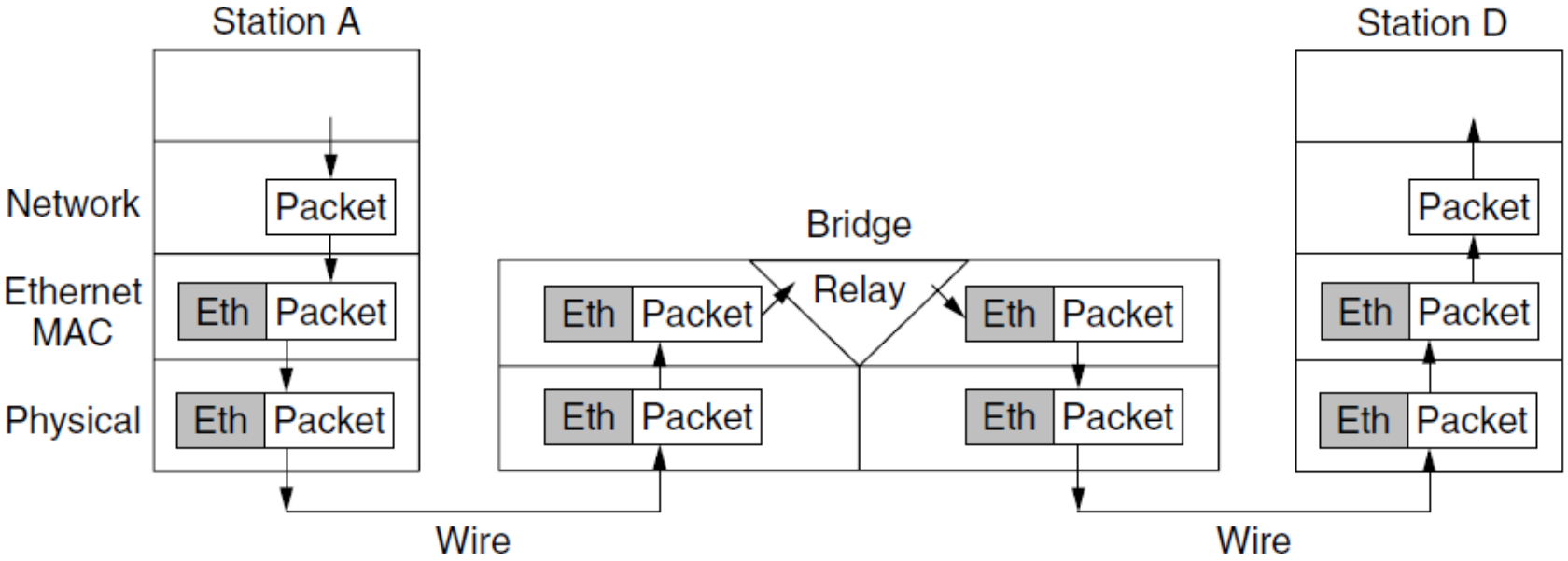

Protocol processing at a bridge.

Spanning Tree Bridges (1)

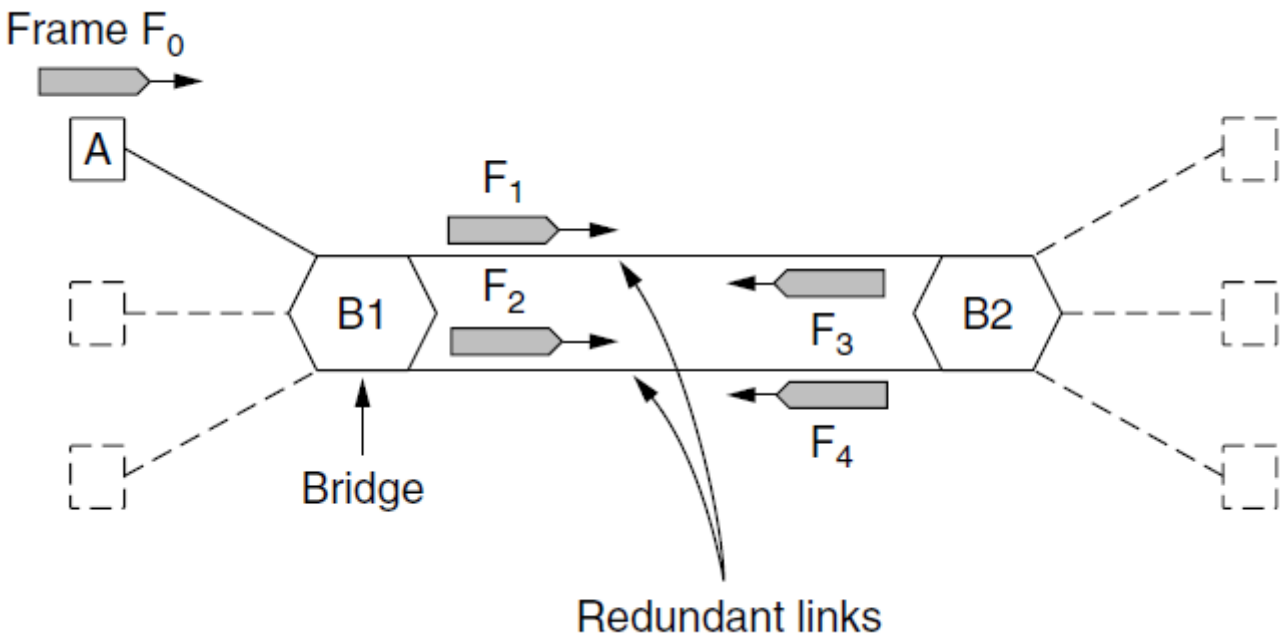

Bridges with two parallel links

Spanning Tree Bridges (2)

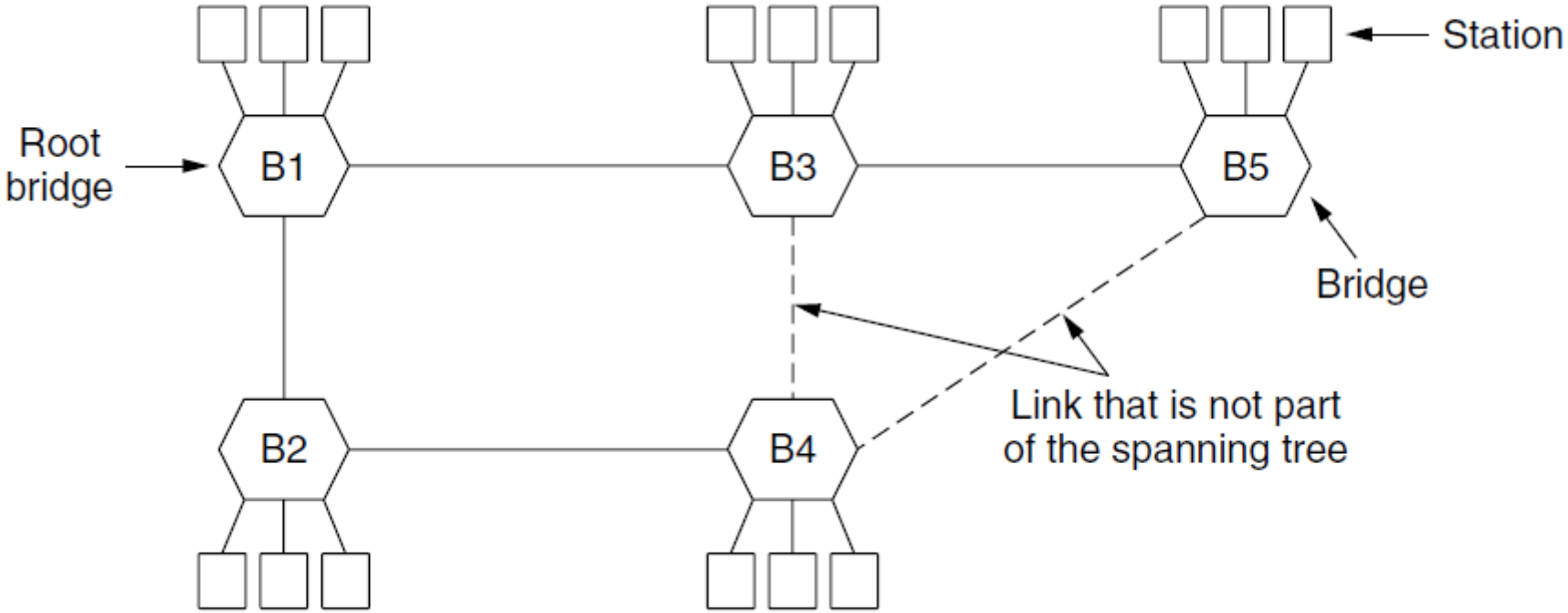

A spanning tree connecting five bridges. The dotted lines are links that are not part of the spanning tree.

Poem by Radia Perlman (1985) Algorithm for Spanning Tree (1)

I think that I shall never see

A graph more lovely than a tree.

A tree whose crucial property

Is loop-free connectivity.

A tree which must be sure to span.

So packets can reach every LAN.

. . .

Poem by Radia Perlman (1985) Algorithm for Spanning Tree (2)

. . .

First the Root must be selected

By ID it is elected.

Least cost paths from Root are traced

In the tree these paths are placed.

A mesh is made by folks like me

Then bridges find a spanning tree.

Repeaters, Hubs, Bridges, Switches, Routers, and Gateways

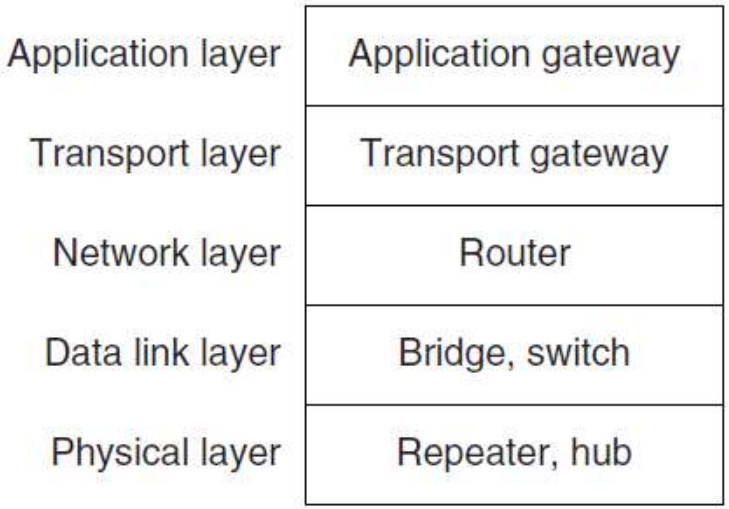

(a)

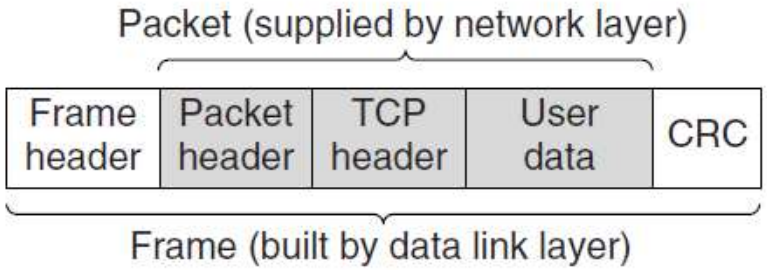

(b)

(a) Which device is in which layer.
(b) Frames, packets, and headers.

Virtual LANs (1)

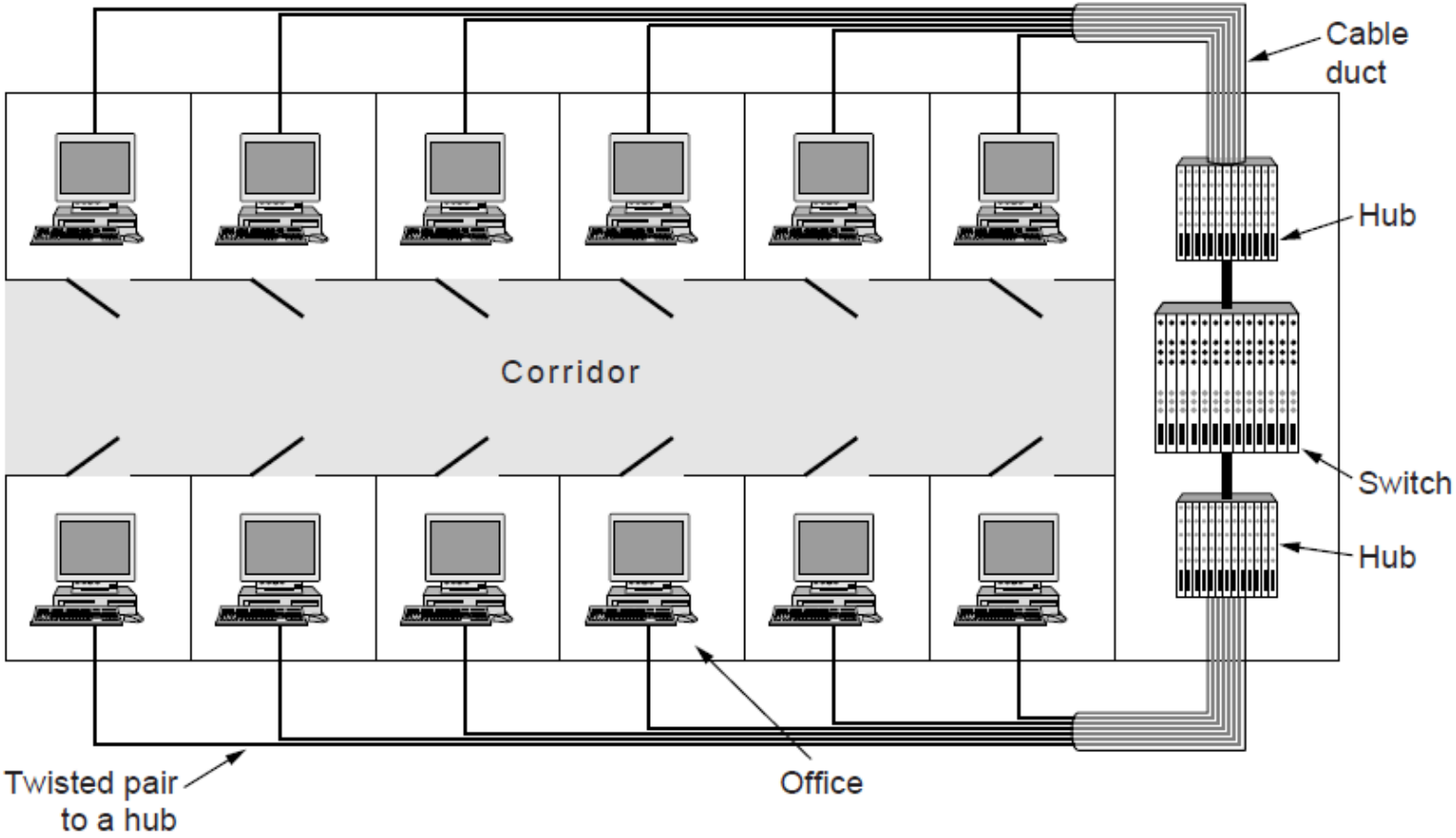

A building with centralized wiring using hubs and a switch.

Virtual LANs (2)

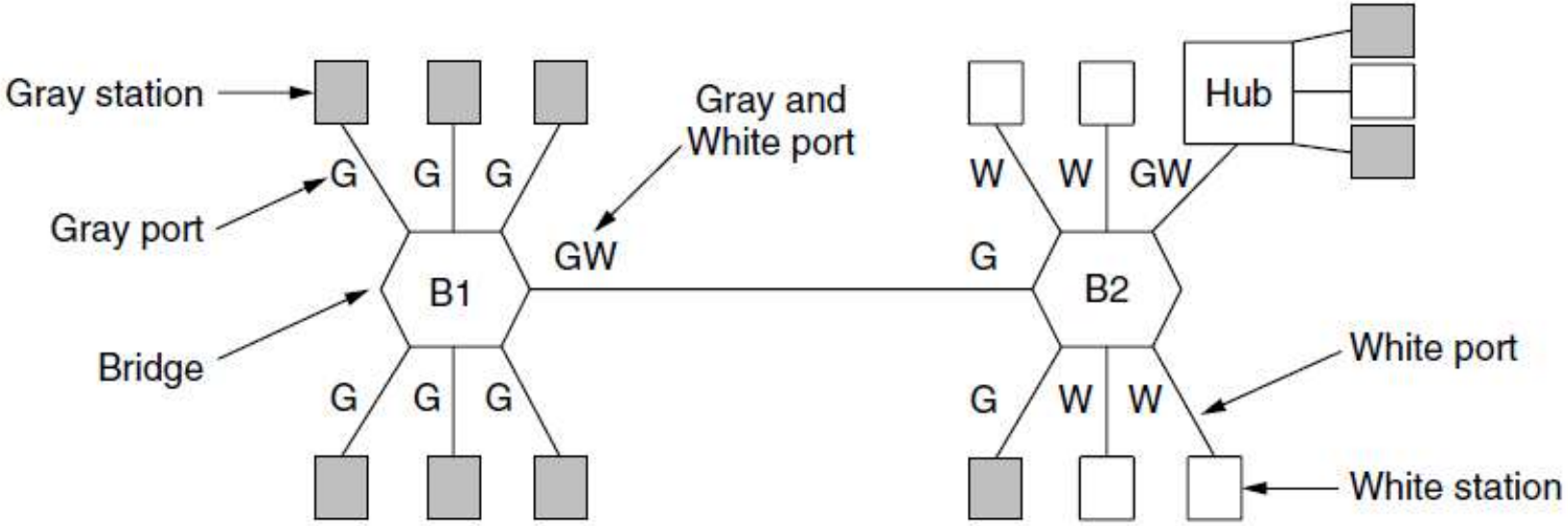

Two VLANs, gray and white, on a bridged LAN.

The IEEE 802.1Q Standard (1)

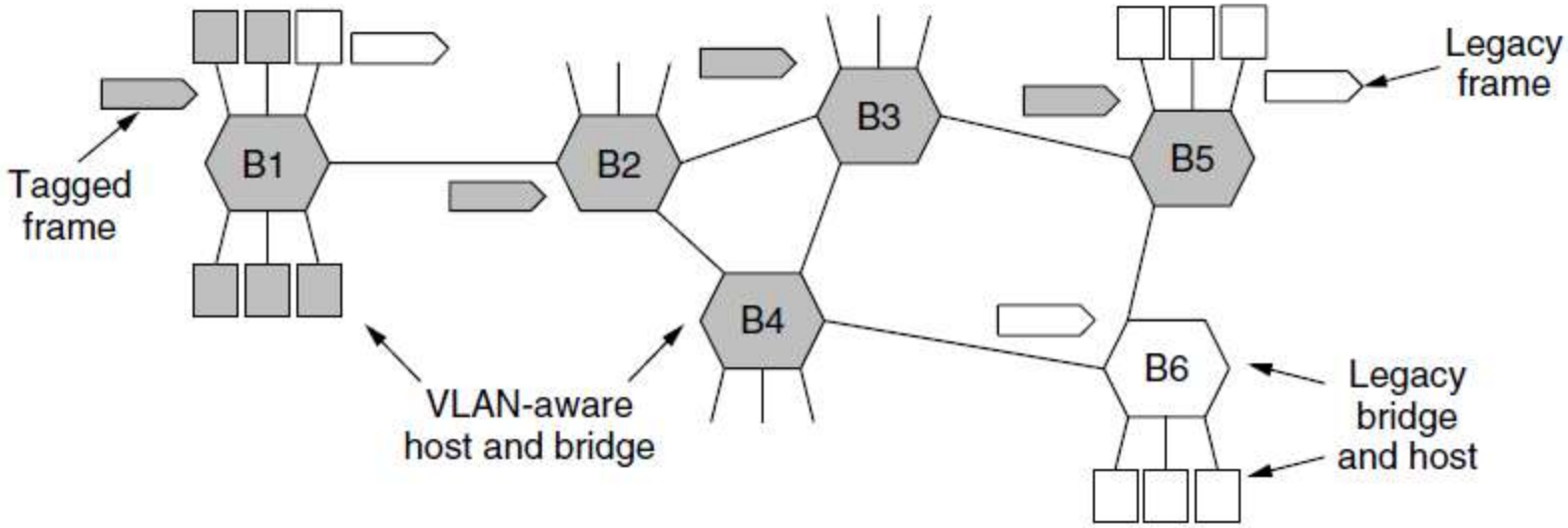

Bridged LAN that is only partly VLAN-aware. The shaded symbols are VLAN aware. The empty ones are not.

The IEEE 802.1Q Standard (2)

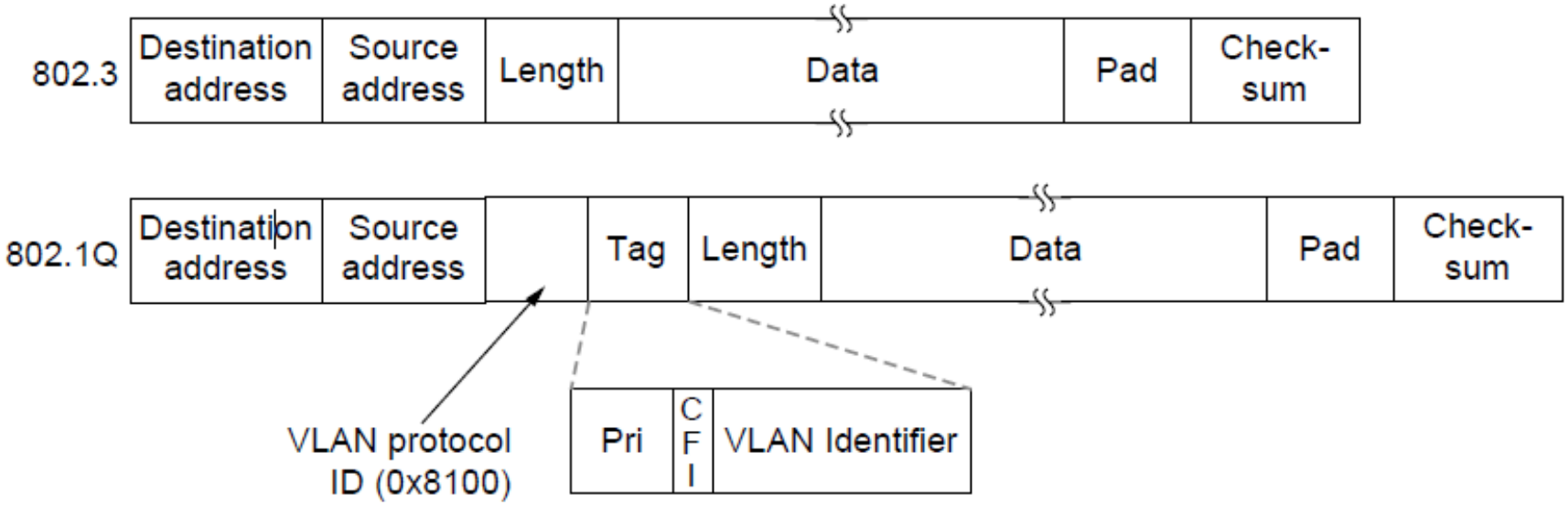

The 802.3 (legacy) and 802.1Q Ethernet frame formats.

End

Chapter 4