Topic

- What is NAT (Network Address Translation)? How does it work?
  - NAT is widely used at the edges of the network, e.g., homes

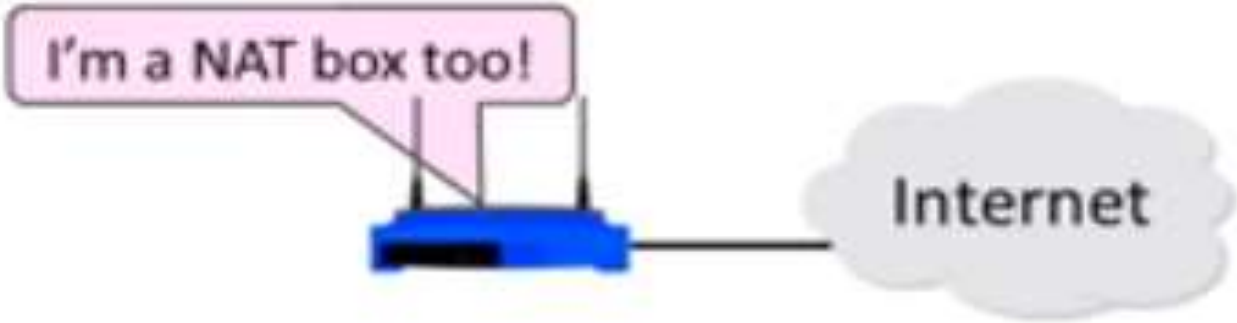

Layering Review

- Remember how layering is meant to work?
  - "Routers don't look beyond the IP header." Well …

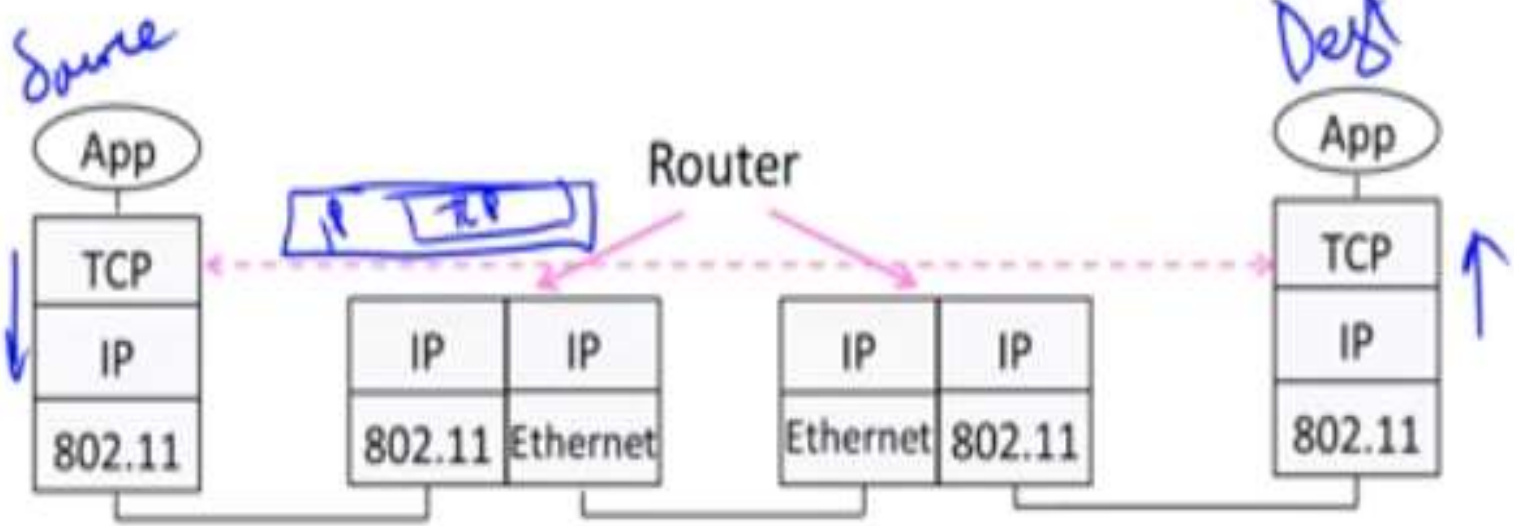

Middleboxes

- Sit "inside the network" but perform "more than IP" processing on packets to add new functionality
  - NAT box, Firewall / Intrusion Detection System

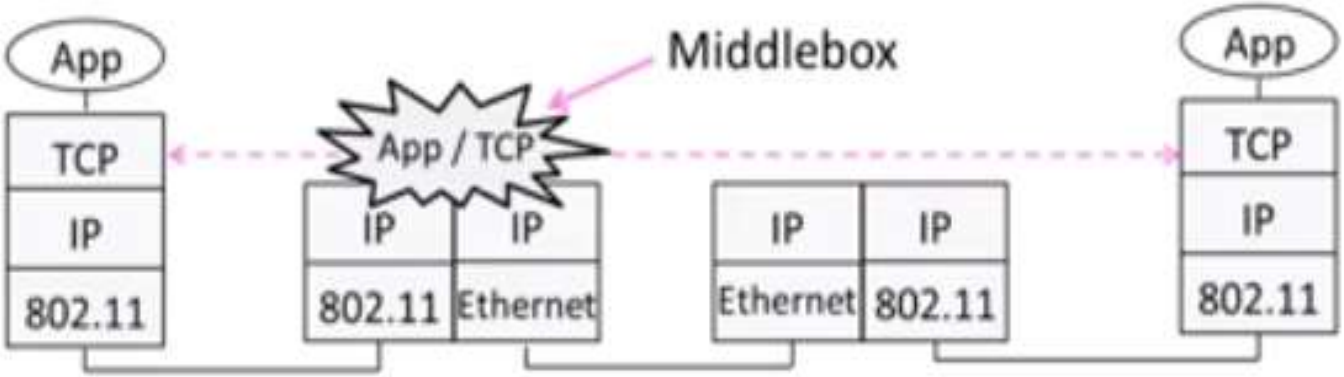

Middleboxes (2)

- Advantages
  - A possible rapid deployment path when there is no other option
  - Control over many hosts (IT)
- Disadvantages
  - Breaking layering interferes with connectivity; strange side effects
  - Poor vantage point for many tasks

NAT (Network Address Translation) Box

- NAT box connects an internal network to an external network
  - Many internal hosts are connected using few external addresses
  - Middlebox that "translates addresses"
- Motivated by IP address scarcity
  - Controversial at first, now accepted

NAT (2)

10.0.0/8
192.168.0.0/16

- Common scenario:
  - Home computers use "private" IP addresses
  - NAT (in AP/firewall) connects home to ISP using a single external IP address

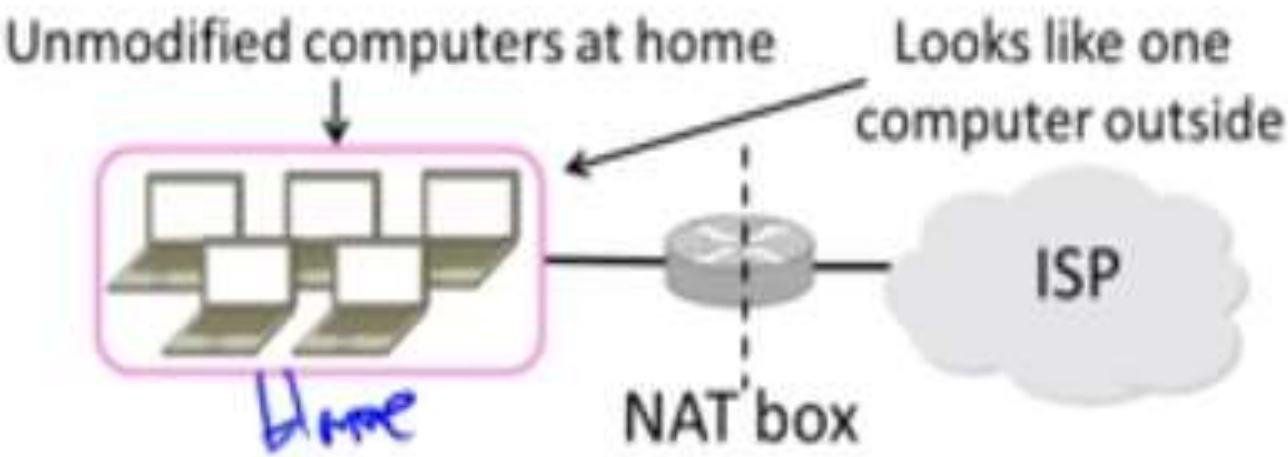

How NAT Works

- Keeps an internal/external table
  - Typically uses IP address + TCP port
  - This is address and port translation

What host thinks | What ISP thinks

Internal IP:port	External IP : port
192.168.1.12 : 5523	44.25.80.3 : 1500
192.168.1.13 : 1234	44.25.80.3 : 1501
192.168.2.20 : 1234	44.25.80.3 : 1502

Private

Public address

- Need ports to make mapping 1-1 since there are fewer external IPs

How NAT Works (2)

- Internal → External:
  - Look up and rewrite Source IP/port

Internal source

Internal IP:port	External IP : port
192.168.1.12 : 5523	44.25.80.3 : 1500

External destination IP=X, port=Y

How NAT Works (3)

- External → Internal
  - Look up and rewrite Destination IP/port

Internal destination

Internal IP:port	External IP : port
192.168.1.12 : 5523	44.25.80.3 : 1500

External source IP=X, port=Y

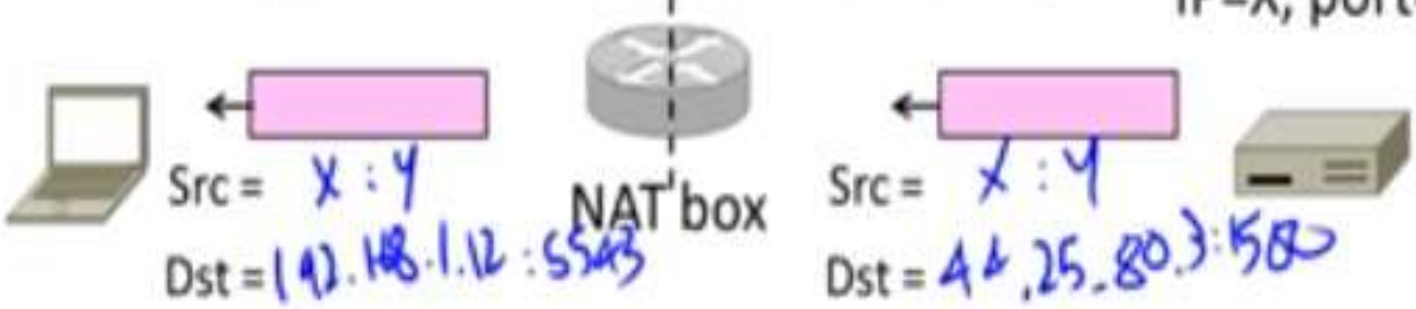

How NAT Works (4)

- Need to enter translations in the table for it to work
  - Create external name when host makes a TCP connection

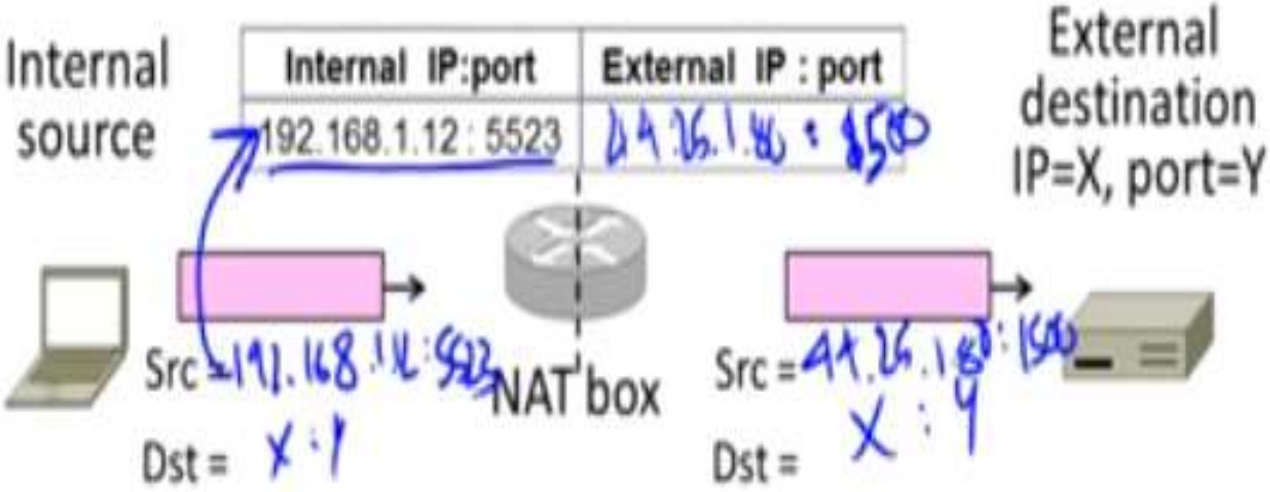

NAT Downsides

- Connectivity has been broken!
  - Can only send incoming packets after an outgoing connection is set up
  - Difficult to run servers or peer-to-peer apps (Skype) at home
- Doesn't work so well when there are no connections (UDP apps)
- Breaks apps that unwisely expose their IP addresses (FTP)

NAT Upsides

- Relieves much IP address pressure
  - Many home hosts behind NATs
- Easy to deploy
  - Rapidly, and by you alone
- Useful functionality
  - Firewall, helps with privacy

- Kinks will get worked out eventually
  - "NAT Traversal" for incoming traffic