Networks and Protocols CE00997-3

Week 5b

WAN’s, Frame Relay, DSL, Cable

Packet Switched - X.25 Protocol

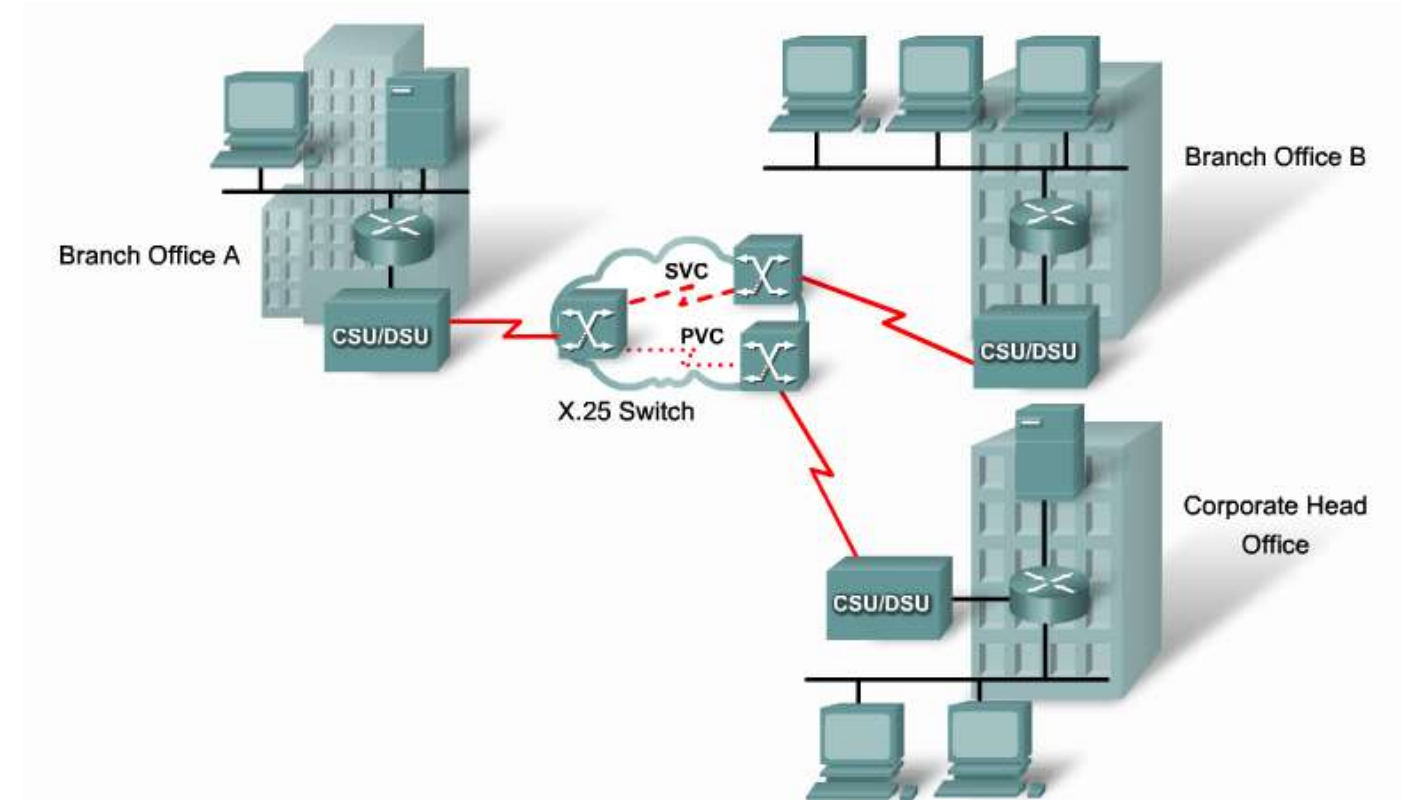

•X.25 provides low bit rate, packet switched service, offering variable capacity over circuits that can be either switched or permanent

ITU X.25 Protocol

- X.25 defines within OSI 7-layer model for packet-switching networks.
  - Layer 1 (physical – X.21)
  - Layer 2 (data link - LAPB)
  - Layer 3 (network – X.25)

ITU X.25 Protocol

Max packet size = 4096 Bytes

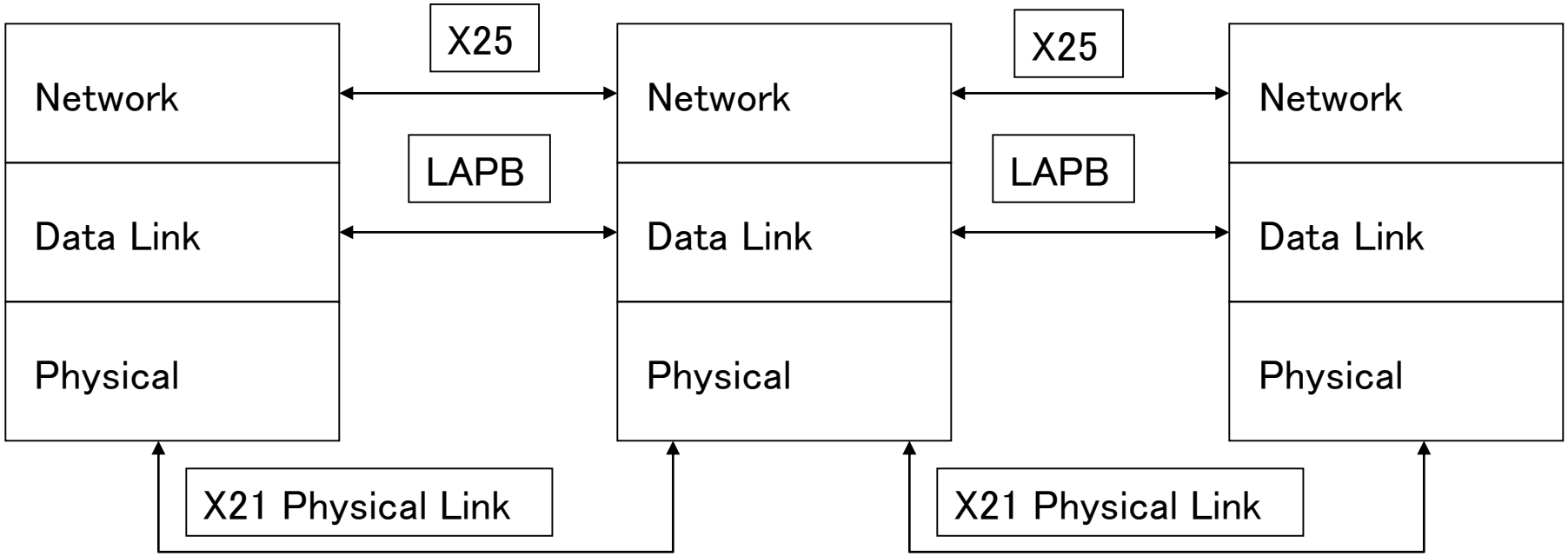

Packet Switched - Frame Relay

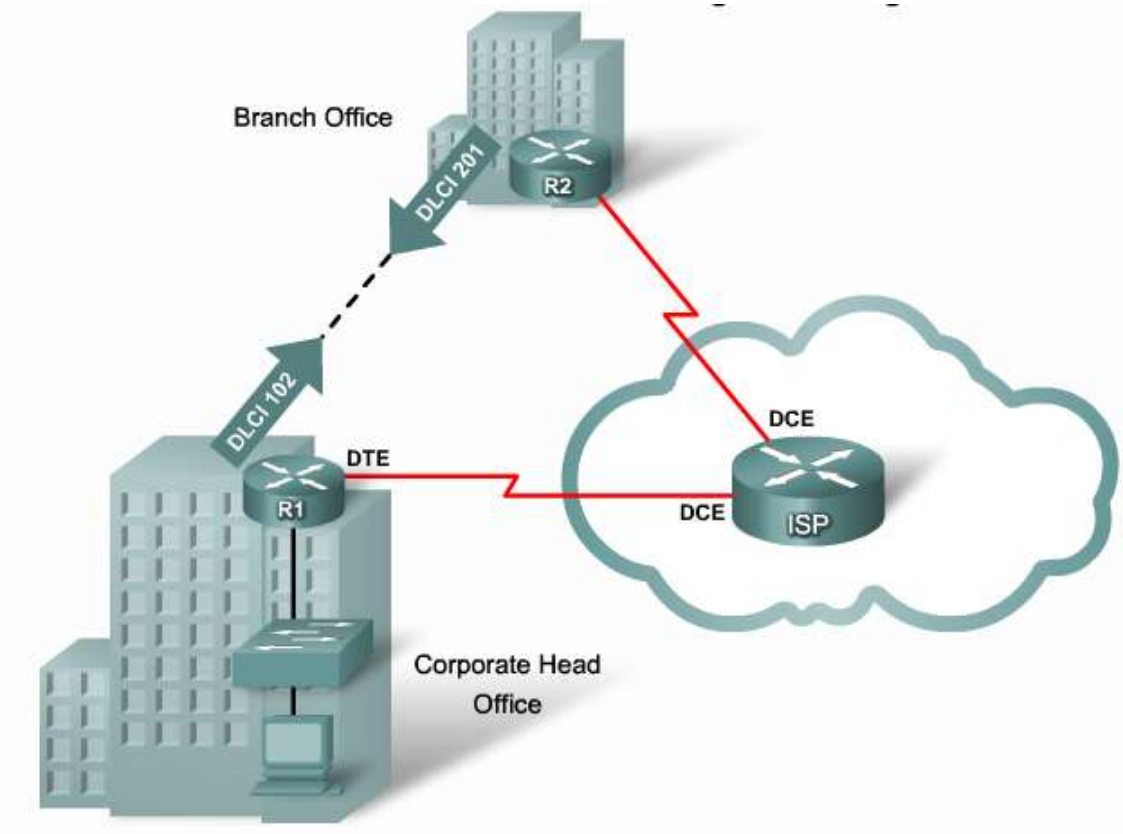

- Frame Relay VCs are uniquely identified by a *DLCI* (data Link Connection Identifier), which ensures bidirectional communication from one DTE device to another.
- Most Frame Relay connections are PVCs rather than SVCs.

Frame Relay

- Operates at OSI Layers 1 and 2.
- Initially designed to work with ISDN.
- A streamlined version of X.25.

Uses 2 types of connection:

- Switched Virtual Circuits (SVCs).
- Permanent Virtual Circuits (PVCs).

Frame Relay

- Frame Relay is a packet-multiplexed interface in a packet switching environment (Developed by Cisco).
- In the US, frame relay uses T1 (up to 1.5Mbps) and T3 (up to 45Mbps) connections.
- In Europe, frame relay supports E1 (up to 2.044Mbps) and E3 (up to 34.36Mbps.)
- The DTE (router) and the DCE (switch) can multiplex various connections over a common medium by way of virtual circuits.
- Designed for reliable digital / fibre environments, so it has little need of the error checking overheads that come with X.25.

Frame Relay

- Cost efficient service for intermittent traffic between sites
- Data put into variable sized units called FRAMES
- Error connection performed by end points
- Designed to replace the analogue X.25 system
- Most common use is to connect LAN's to major backbones
- Frames operate at Layer 2
- CIR – committed information rate, any packets after this are marked DE and can be dropped if link congested

Frame Relay structure

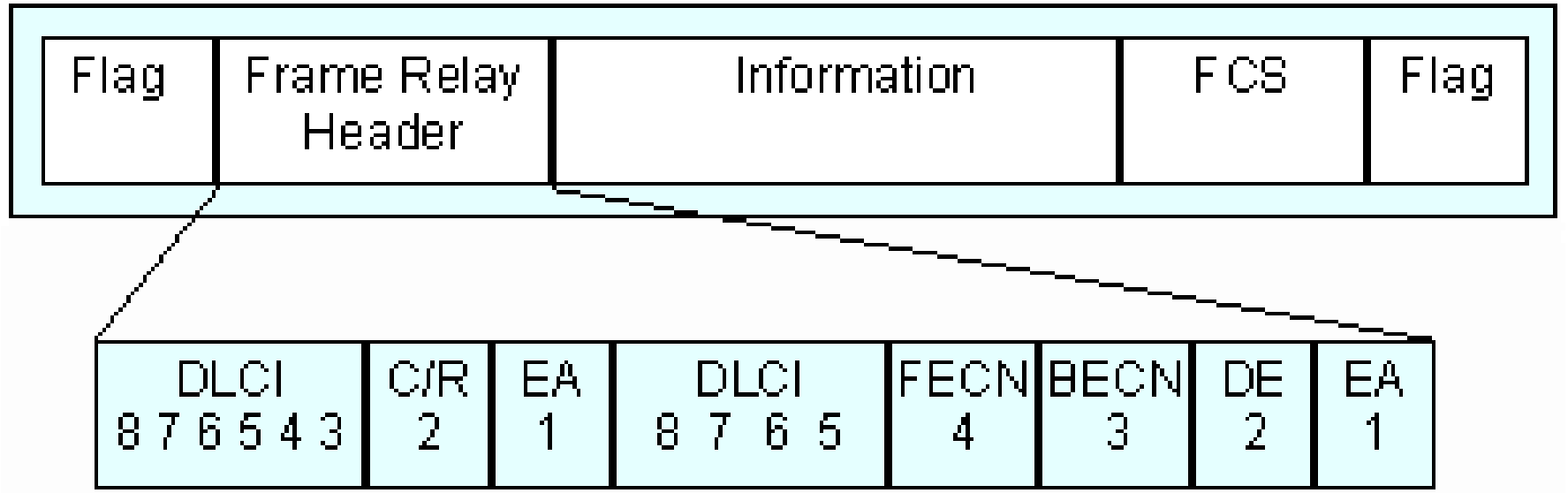

Packet Switching - Issues

The variety of packet and frame sizes make traffic handling unpredictable in a packet switched network

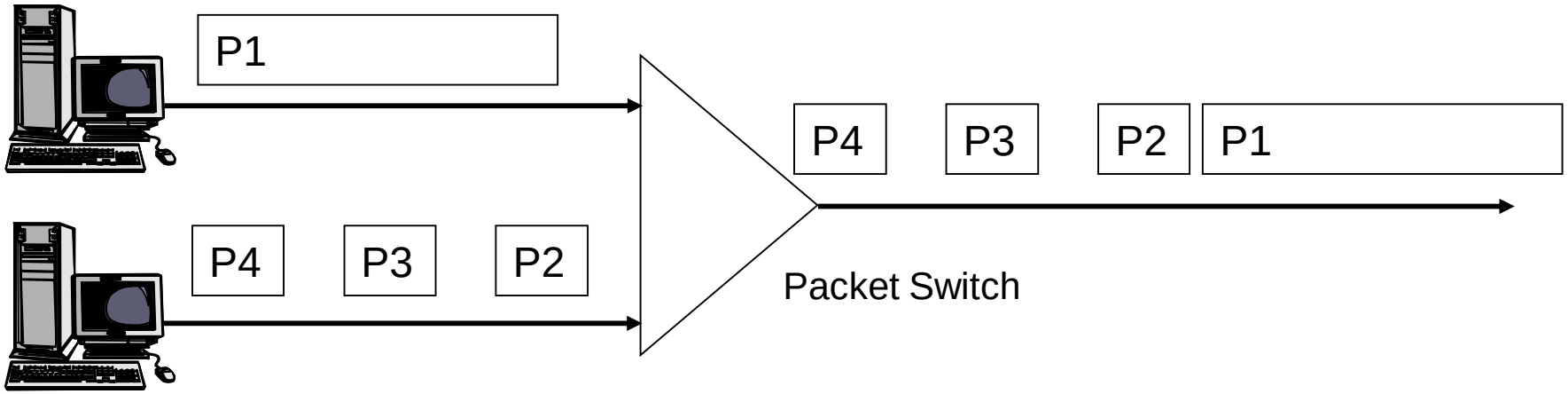

- The size of packet P1 is serviced first, delaying packets P2-P4

Cell Switched - Asynchronous Transport Mode (ATM)

All data frames are broken up into fixed length cells, which allows them to be transmitted with predictability and uniformity

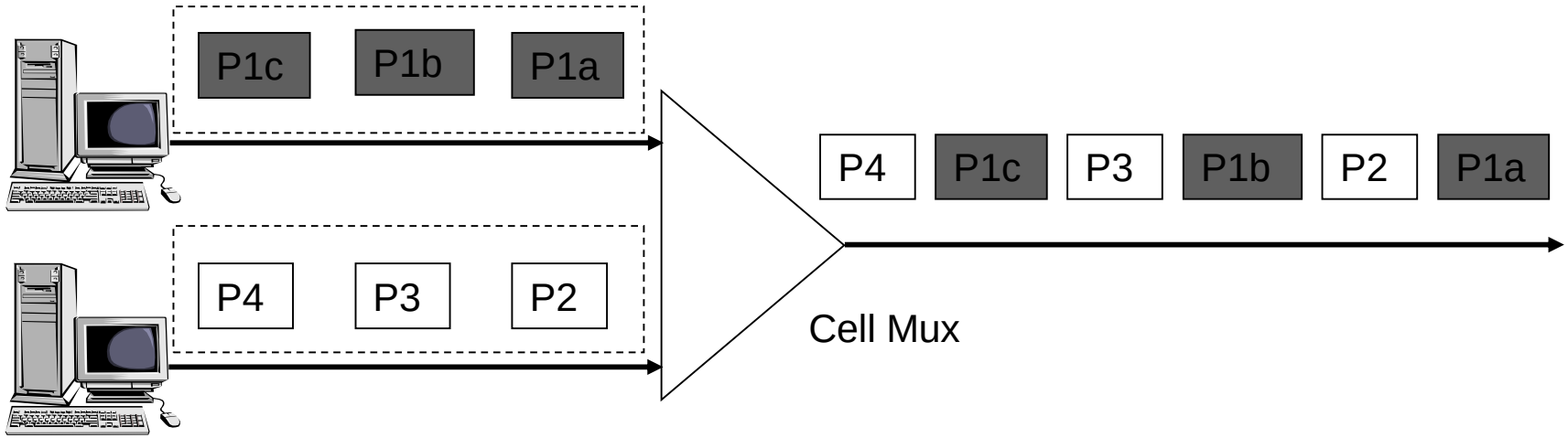

- A cell is defined as a small, fixed-sized block of information

Cell Switched - Asynchronous Transport Mode (ATM)

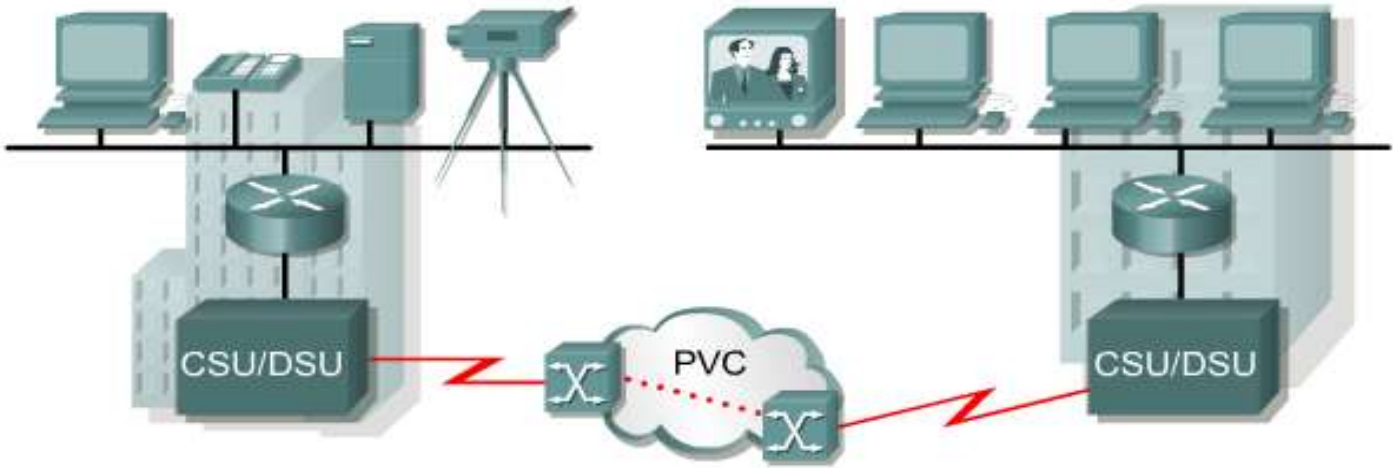

•A shared network technology that offers very low *latency* and *jitter* at much higher bandwidths than frame relay.

•Capable of transferring voice, video, and data through private and public networks.

•Built on a cell-based architecture rather than on a frame-based architecture.

Internet Connection – Digital Subscriber Link (DSL)

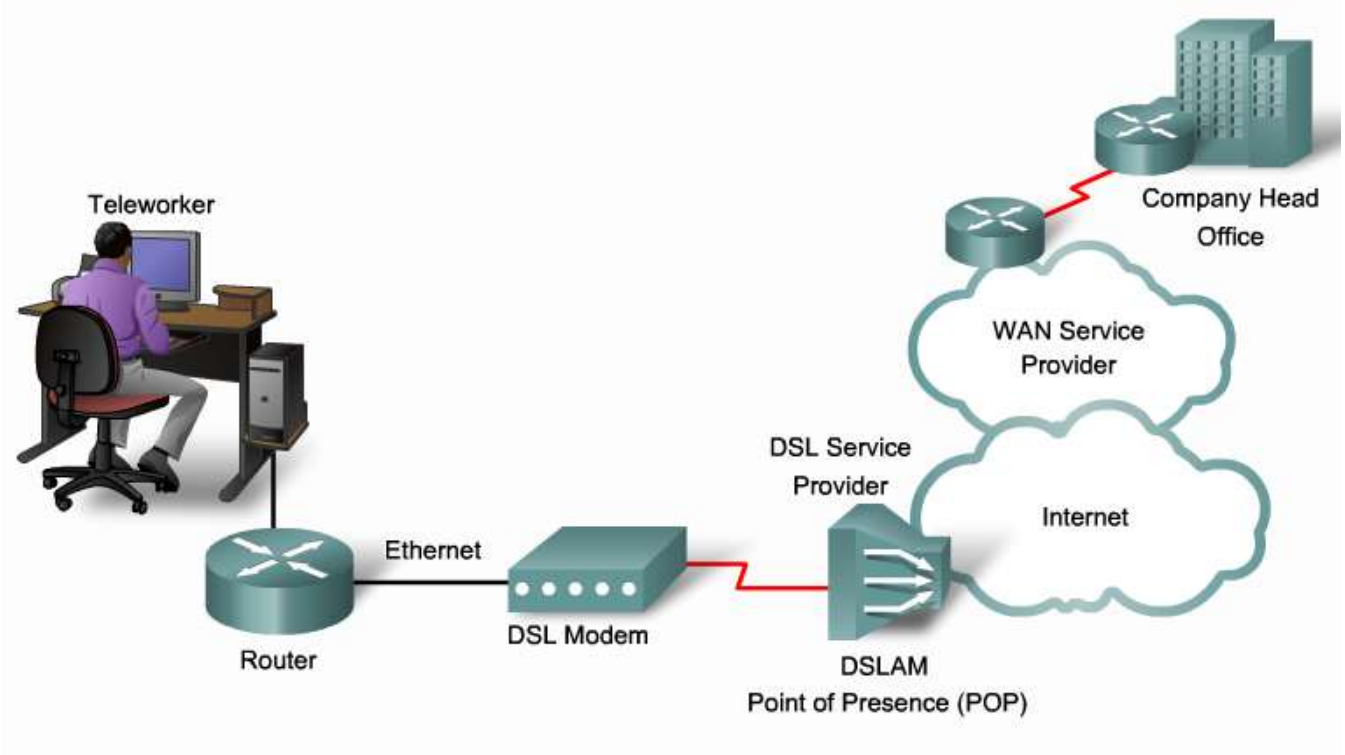

•DSL technology is an always-on connection technology that uses existing twisted-pair telephone lines to transport high-bandwidth data, and provides IP services to subscribers

ADSL Technology

Service	Download	Upload
ADSL	64 kbps - 8.192 Mbps	16 kbps - 640 kbps
SDSL	1.544 Mbps - 2.048 Mbps	1.544 Mbps - 2.048 Mbps
HDSL	1.544 Mbps - 2.048 Mbps	1.544 Mbps - 2.048 Mbps
IDSL	144 kbps	144 kbps
CDSL	1 Mbps	16 kbps - 160 kbps

What is DSL?

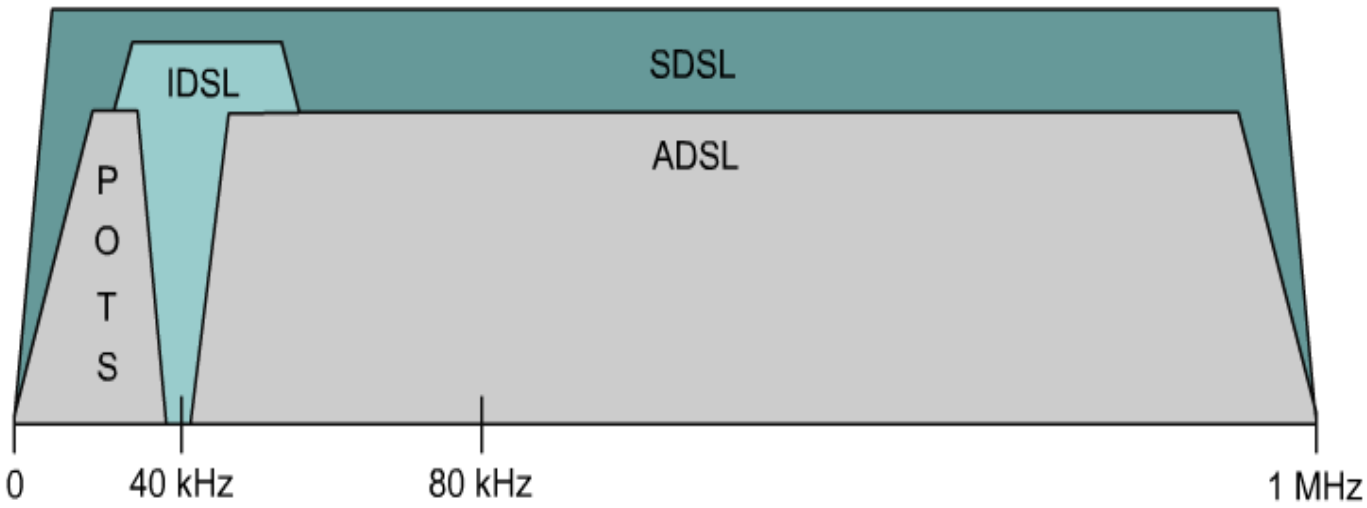

- DSL uses the high frequency range of up to about 1 MHz.
- For example, asymmetric digital subscriber line (ADSL) uses the frequency range of about 42 kHz to 1MHz.
- ADSL does not overlap the Plain Old Telephone Service (POTS) voice frequency range. (300 – 4000 Hz)
- POTS and ADSL service can coexist over the same wire.

ADSL channels and encoding

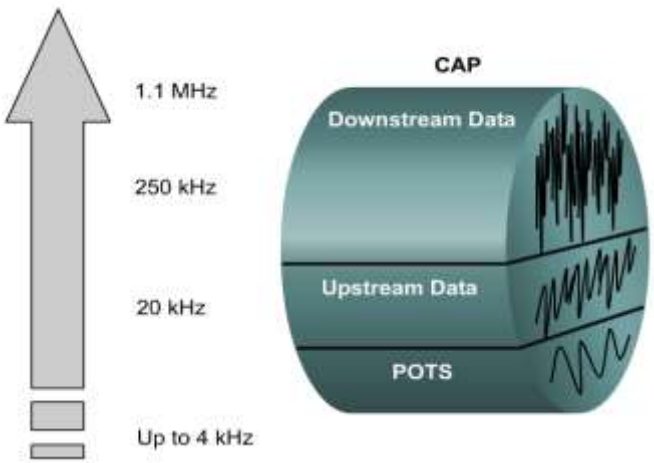

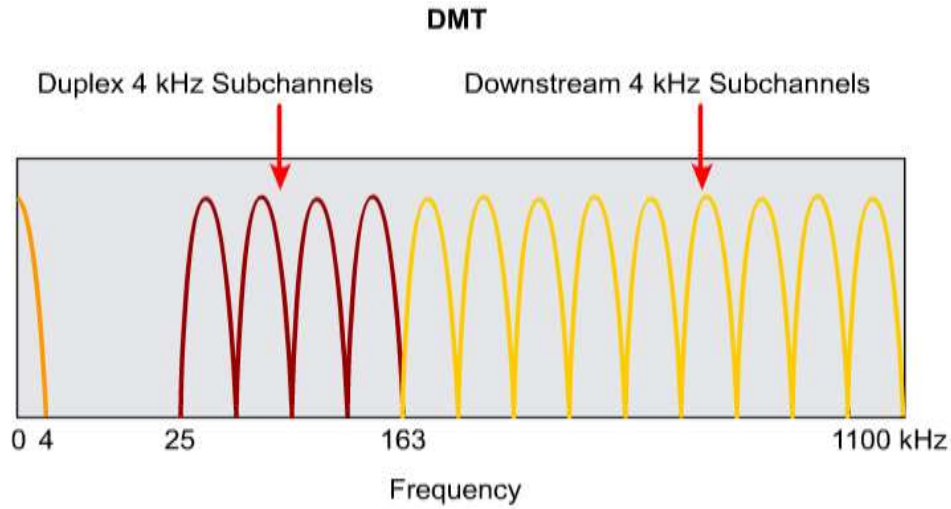

- DMT (Discrete Multitone Modulation)
- DMT divides signals into separate channels.
- DMT divides the data into 250 separate channels, each 4 kHz wide.
- Each channel is monitored.
- If the quality is too impaired, the signal is shifted to another channel. This system constantly shifts signals between different channels, searching for the best channels for transmission and reception.

Internet Connection – Cable Modem

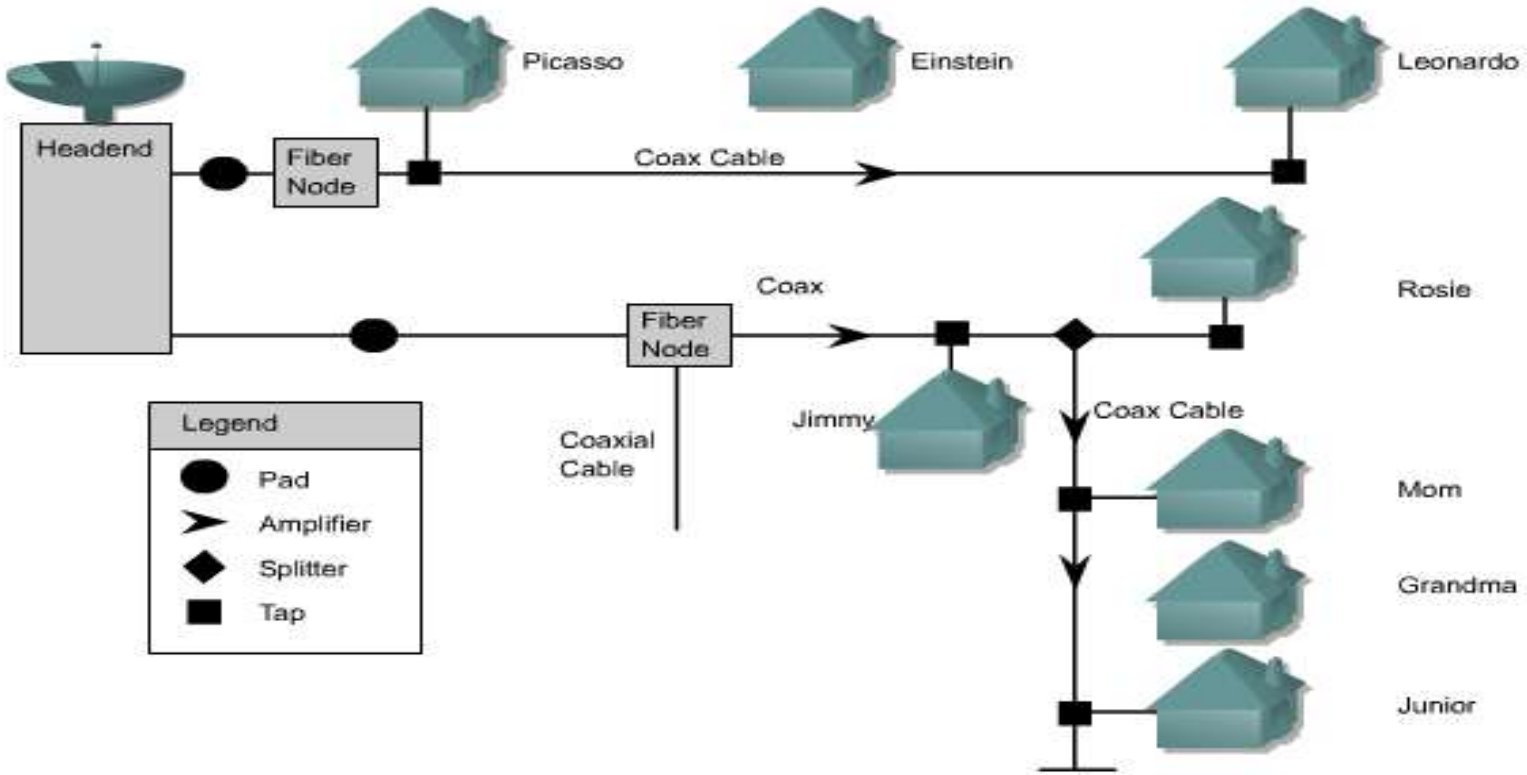

•Coaxial cable is widely used in urban areas to distribute television signals.

•Network access is available from some cable television networks - allows for greater bandwidth than the conventional telephone local loop.

Cable Modem

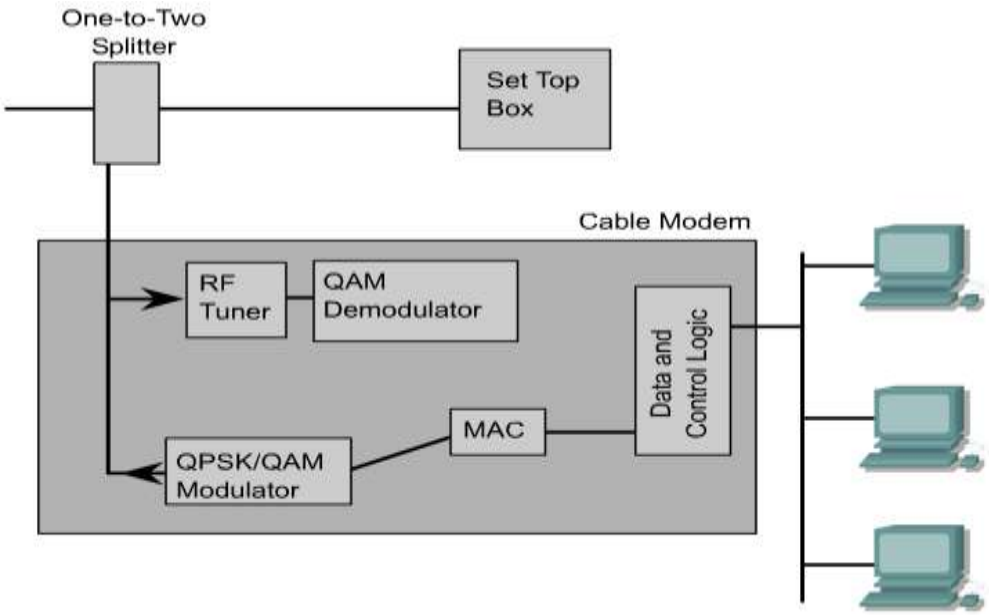

- Cable modems provide an always-on connection and a simple installation.
- A cable modem is capable of delivering up to 30 to 40 Mbps of data on one 6 MHz cable channel.
- With a cable modem, a subscriber can continue to receive cable television service while simultaneously receiving data to a personal computer.

Internet Connection – Broadband Wireless

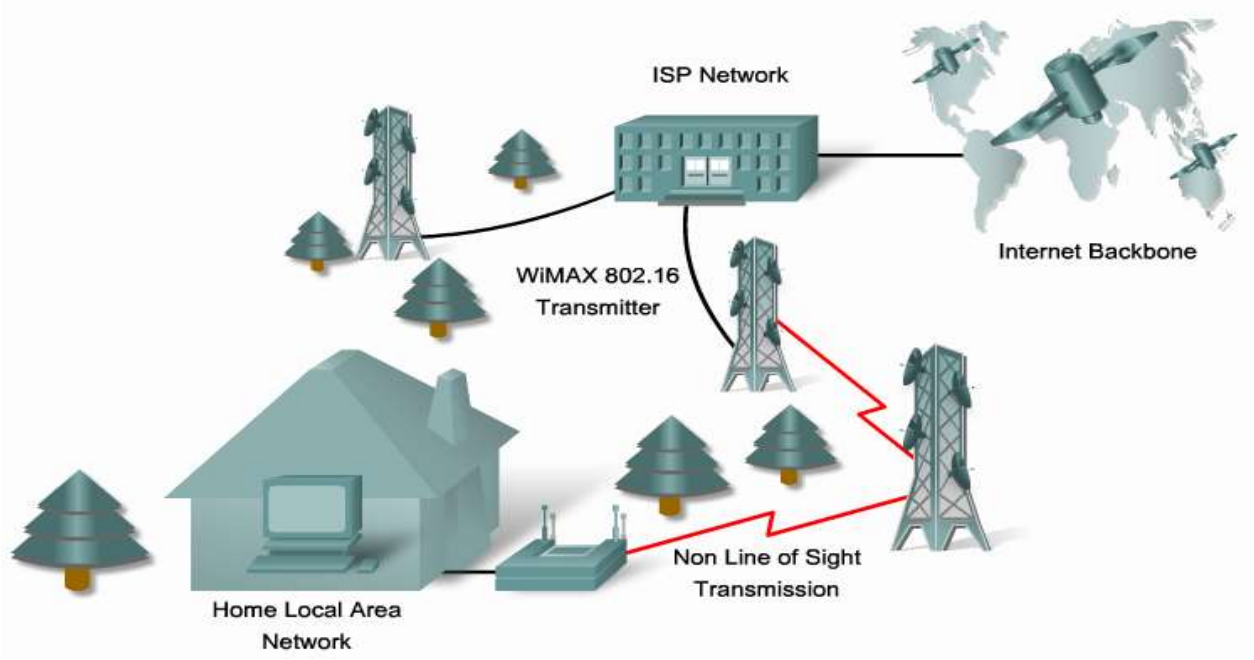

- Municipal WiFi
- WiMax (IEEE 802.16)
- Satellite

Virtual Private Networks (VPN)

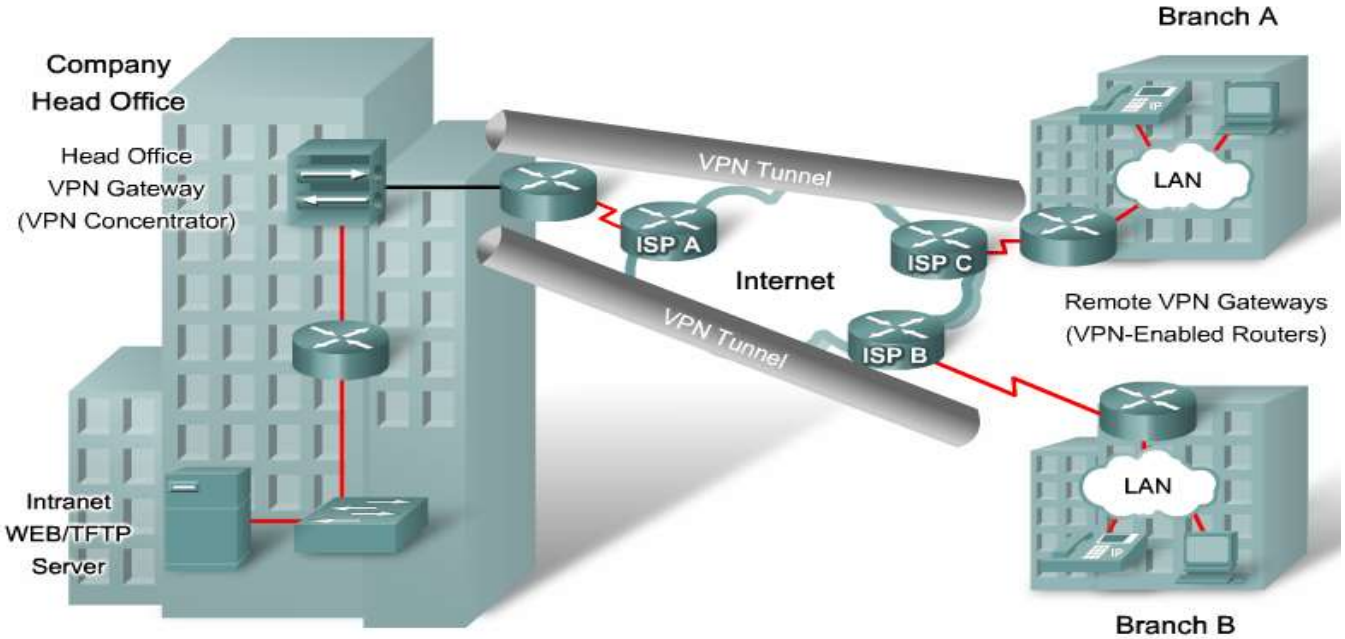

•To address security concerns when network resources are accessed remotely over the Internet, broadband services provide capabilities for using Virtual Private Network (VPN) connections to a VPN server.

•A VPN is an *encrypted* connection between private networks over a public network such as the Internet. Instead of using a dedicated Layer 2 connection such as a leased line, a VPN uses virtual connections called VPN tunnels, which are routed through the Internet to connect LAN resources.