Overview

◎Last Lectures

- » **C programming**
- » **Source:**

◎This Lecture

- » **Packet switching in Wide Area Networks**
- » **Source: chapter 10**

◎Next Lecture

- » **Routing in WAN**
- » **Source: chapter 10**

Introduction to WAN's

◎Similar to a highway system

» Consider a town or city as a LAN

» Connections between cities make up a WAN

◎Spans a large geographical area

» often a country or a continent

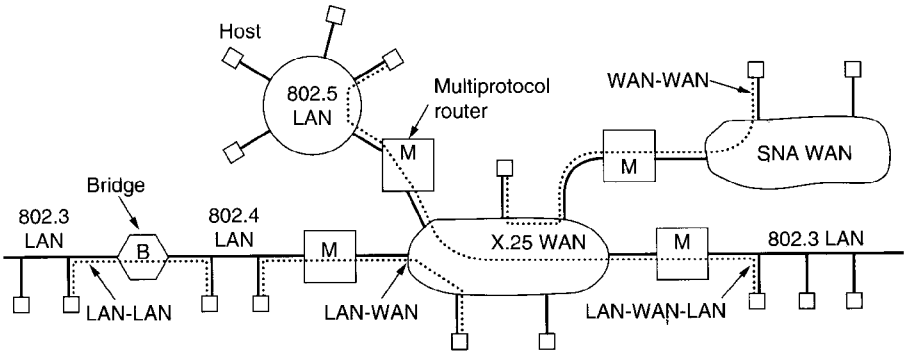

Fig. 5-33. Network interconnection.

◎Subnet: connecting LANs into a WAN

» A subnet consists of large cities and backbone highways in a traffic system

» The hosts are connected by a communication *subnet*, whose job is to carry messages or packets from host to host

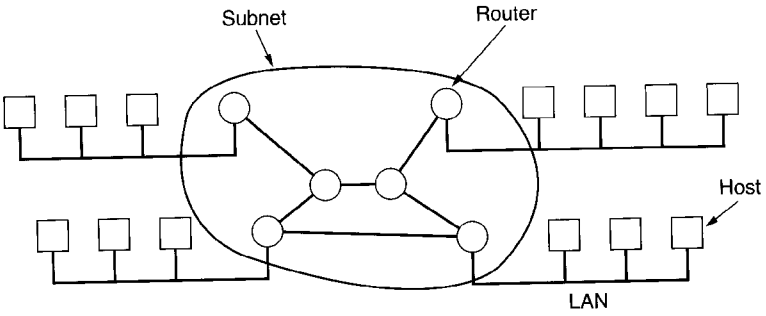

Fig. 1-5. Relation between hosts and the subnet.

Switching in Subnets

- **Subnets can be implemented based on telephone networks**
  - » **Circuit switching is used**
- **Circuit switching designed for voice**
  - » **Resources dedicated to a particular call**
  - » **Much of the time a connection is idle for data communications**
  - » **Data rate is fixed, so both ends must operate at the same rate**
- **Packet switching**
  - » **Data transmitted in small packets**
    - – **Typically 1000 octets**
    - – **Longer messages split into series of packets**
    - – **Each packet contains a portion of user data plus some control info**
  - » **Control info**
    - – **Routing (addressing) info**
  - » **Packets are received, stored briefly (buffered) and past on to the next node**
    - – **Store and forward**
- **Message Switching**
  - » **Similar to packet switching except using messages which are stored into the disk Disadvantage: a long message may occupy the route for a long time**

Packet switching

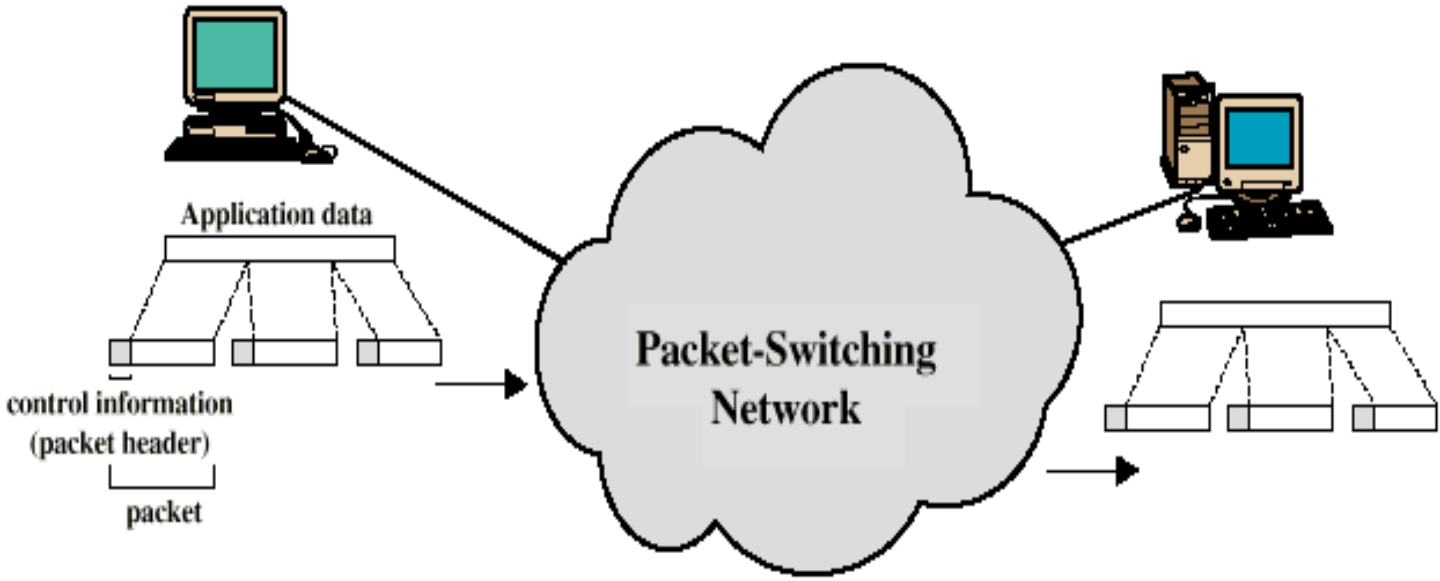

◎ Packet switching is more suitable for WAN

- » Line efficiency
  - – Single node to node link can be shared by many connections over time
  - – Packets queued and transmitted as fast as possible
- » Data rate conversion
  - – Each station connects to the local node at its own speed
  - – Nodes buffer data if required to equalize rates
- » Packets are accepted even when network is busy
  - – Delivery may slow down
- » Priorities can be used

Packet switching

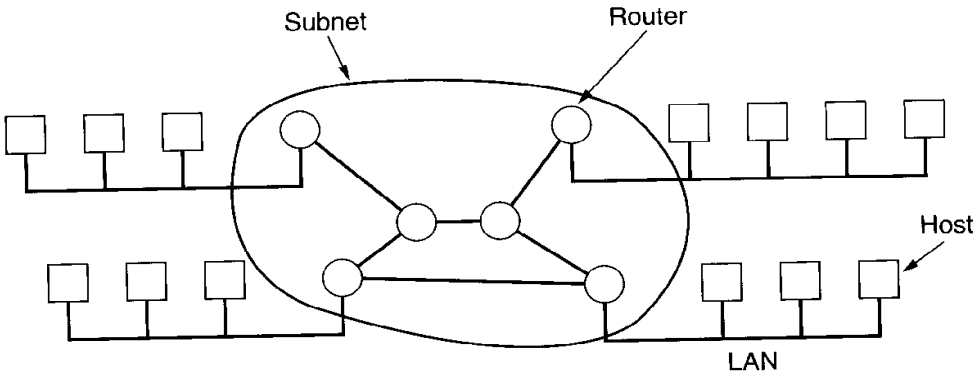

Fig. 1-5. Relation between hosts and the subnet.

- **Based on packet switching, a subnet consists of two distinct components**
  - » **transmission lines and routers**
- **Router**
  - » **Routers are specialised computers used to connect multiple LANs and other routers. Their functions are packet switching/routing. But it needs to handle differences of LAN protocols.**
- **Packets handled in two ways in WAN**
  - » **Datagram**
  - » **Virtual circuit**

Packet switching

◎Datagram

- » Each packet treated independently
- » Packets can take any practical route
- » Packets may arrive out of order
- » Packets may go missing
- » Up to receiver to re-order packets and recover from missing packets
- » Similar to letter delivery

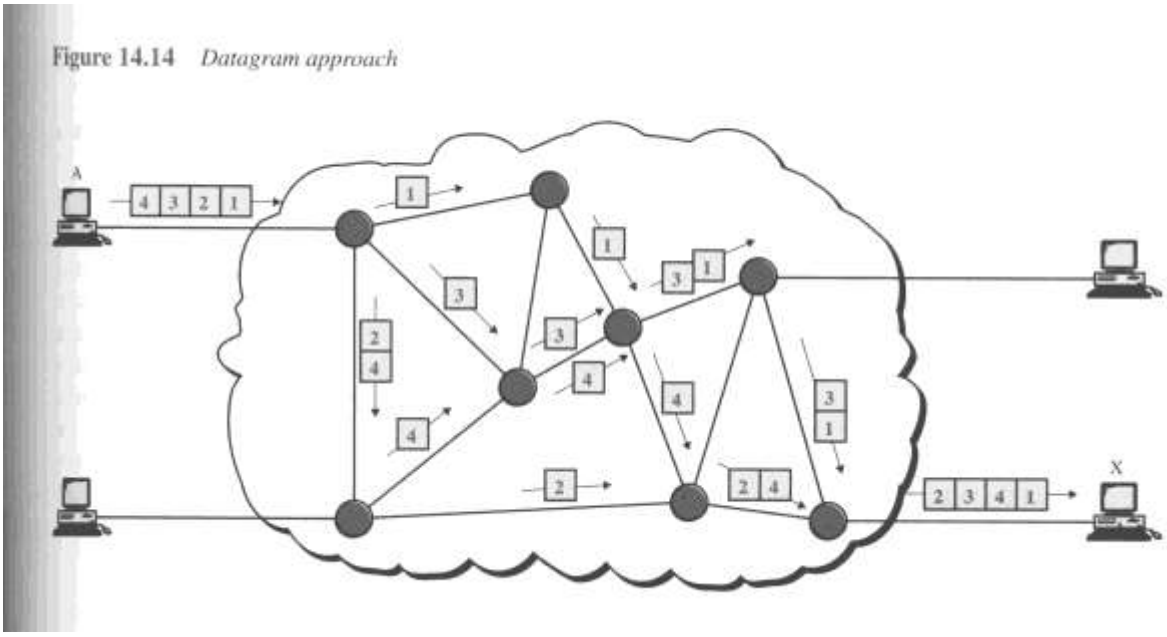

Figure 14.14 *Datagram approach*

Packet switching

◎Virtual circuit

- » Preplanned route established before any packets sent
- » Call request and call accept packets establish connection (handshake)
- » Each packet contains a virtual circuit identifier instead of destination address
- » No routing decisions required for each packet
- » Clear request to drop circuit/connection
- » Similar to voice delivery in circuit switching, but it is not a dedicated path

Figure 14.16 *Switched virtual circuit (SVC)*

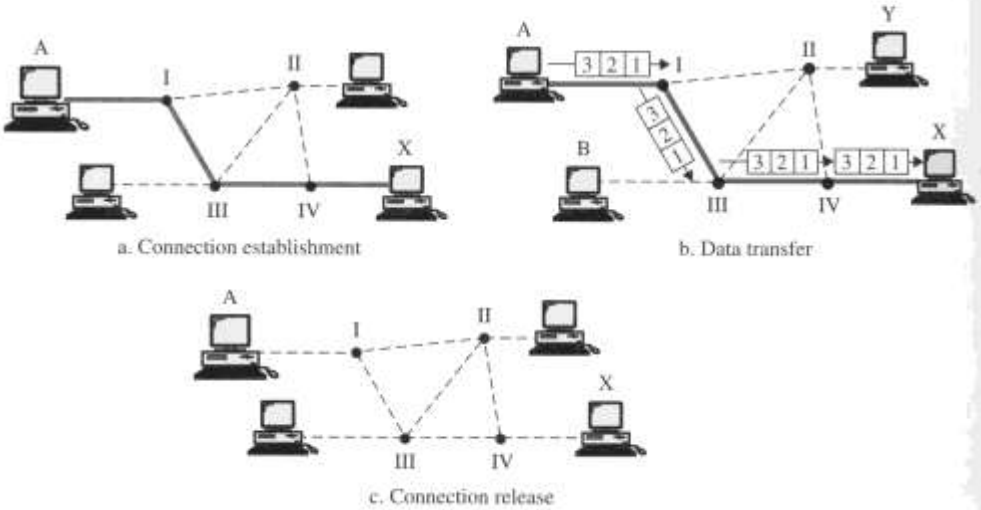

Virtual circuits vs Datagram

◎Virtual circuits

- » Network can provide sequencing and error control
- » Packets are forwarded more quickly
  - – No routing decisions to make
- » Less reliable
  - – Loss of a node looses all circuits through that node

◎Datagram

- » No call setup phase
  - – Better if few packets
- » More flexible
  - – Routing can be used to avoid congested parts of the network

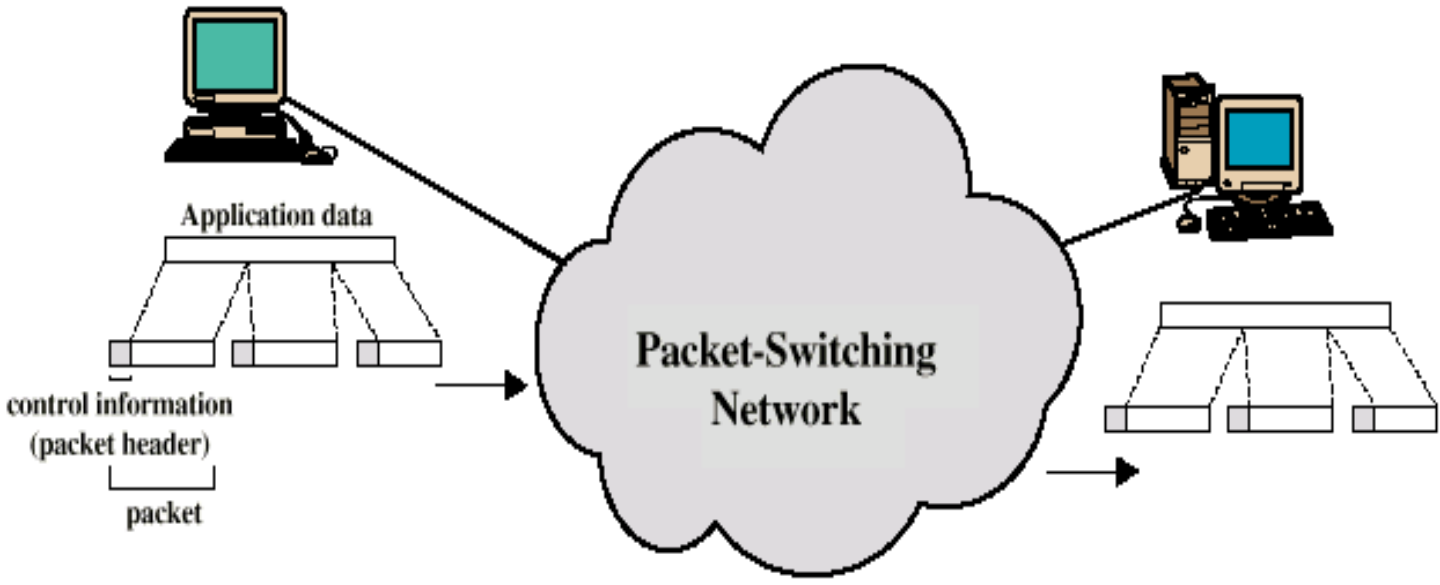

Packet size

◎Packet size affects transmission time

» **Transmission time: the time it takes for a message to arrive at the destination**

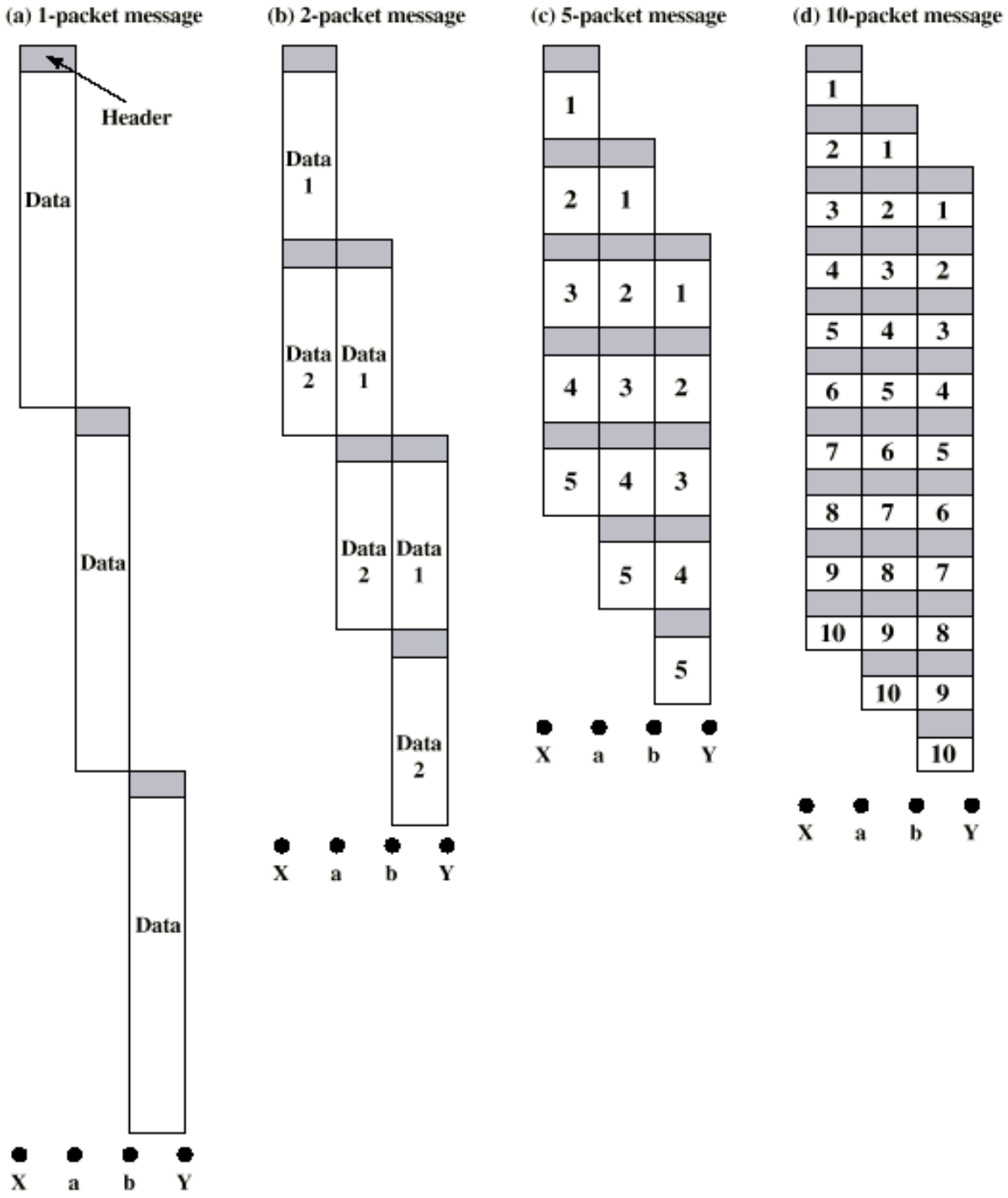

Circuit and packet switching

◎Three types of delays are concerned

- » **Propagation delay: the time it takes a signal to propagate from one node to the next**
- » **Transmission time: the time it takes for a transmitter to send out a block of data**
- » **Node delay: the time it takes for a node to perform the necessary processing as it switches data**

◎The difference between them is node delay (processing delay)

- » **Refer Table 10.1 for more differences**

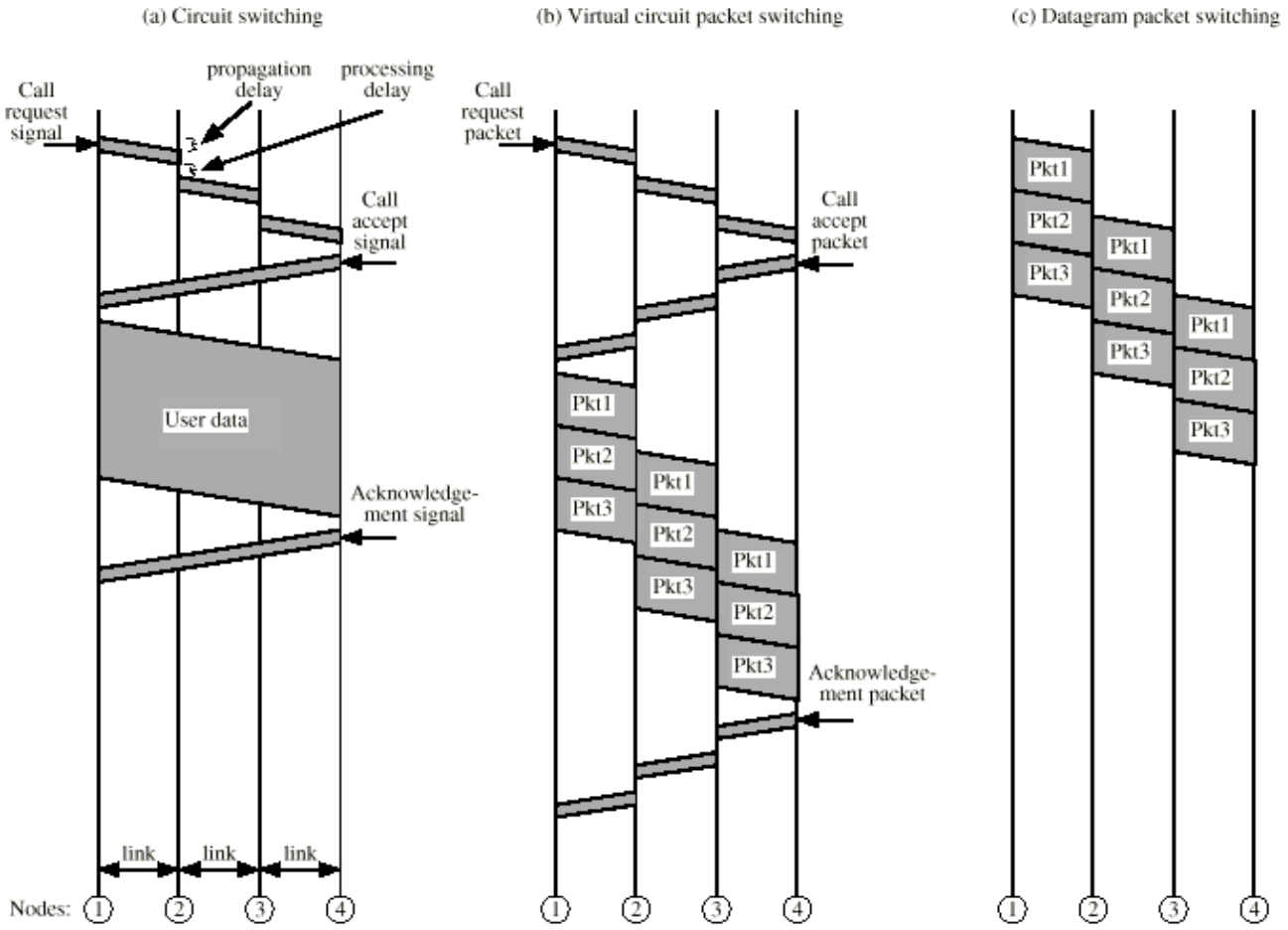

Services of packet switching

- A packet switching network may provide users the following two services
- Connection oriented
  - » Station requests logical connection (virtual circuit)
  - » All packets identified as belonging to that connection & sequentially numbered
  - » Network delivers packets in sequence
  - » External virtual circuit service, e.g. X.25
  - » Different from internal virtual circuit operation
- Connectionless
  - » Packets handled independently
  - » External datagram service
  - » Different from internal datagram operation

Services of packet switching

◎Two types of services

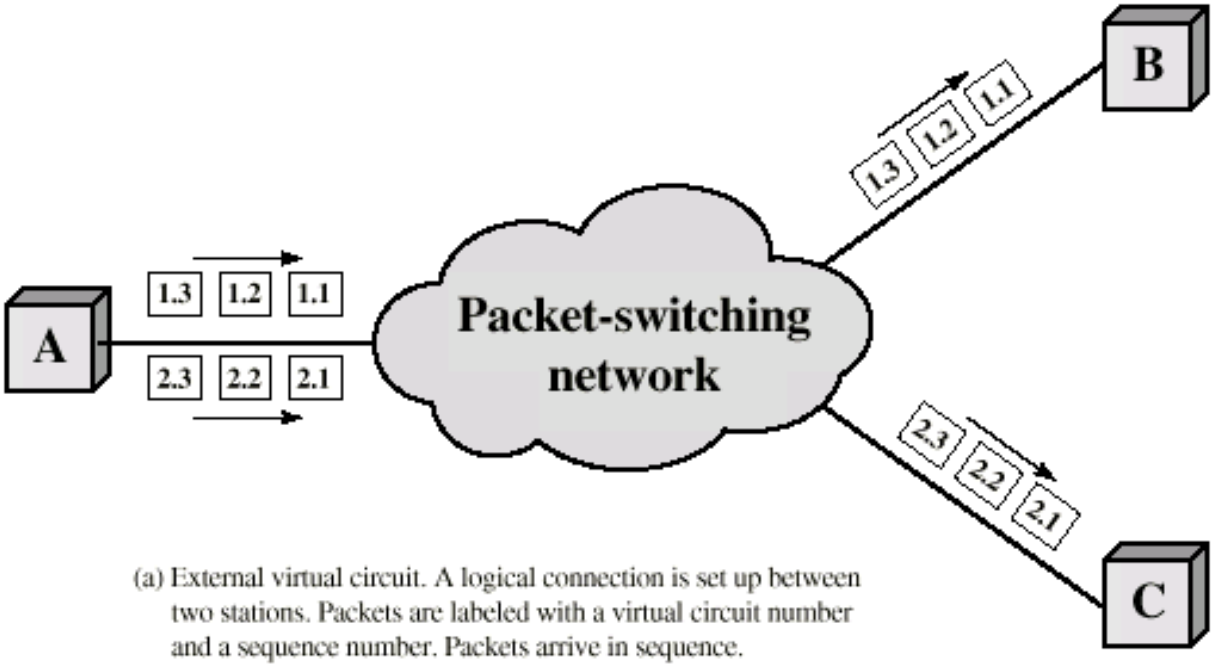

(a) External virtual circuit. A logical connection is set up between two stations. Packets are labeled with a virtual circuit number and a sequence number. Packets arrive in sequence.

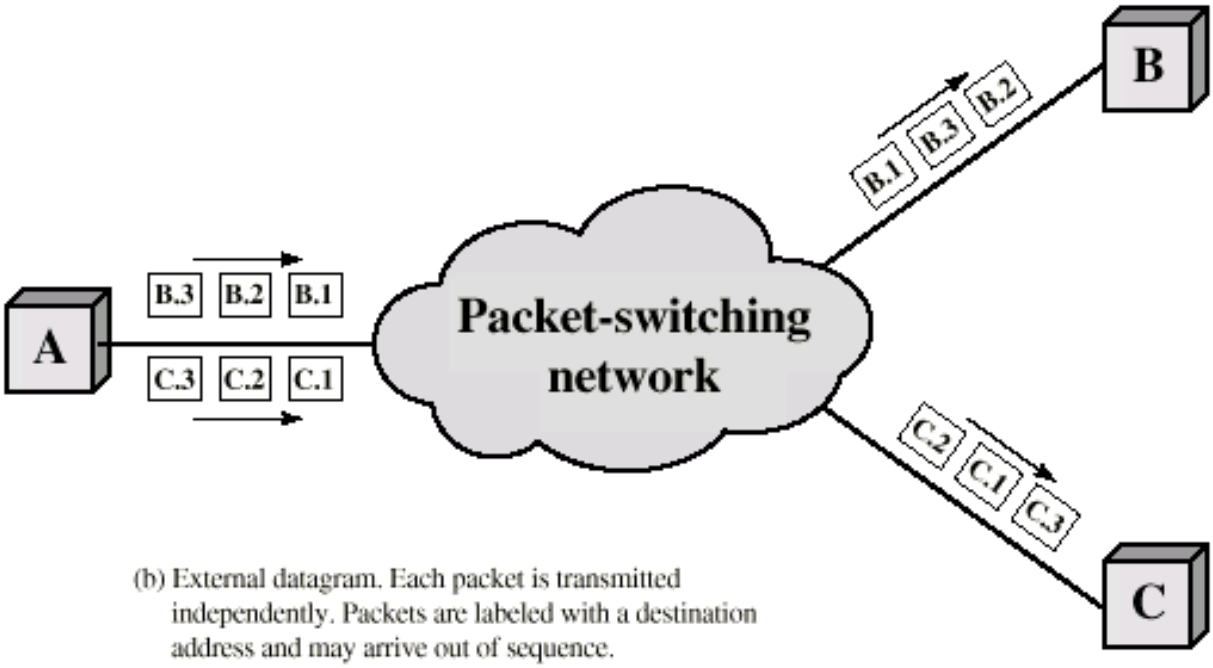

(b) External datagram. Each packet is transmitted independently. Packets are labeled with a destination address and may arrive out of sequence.

Internal operation

◎ A packet switching network may be internally operated as

» **Virtual circuit or datagram**

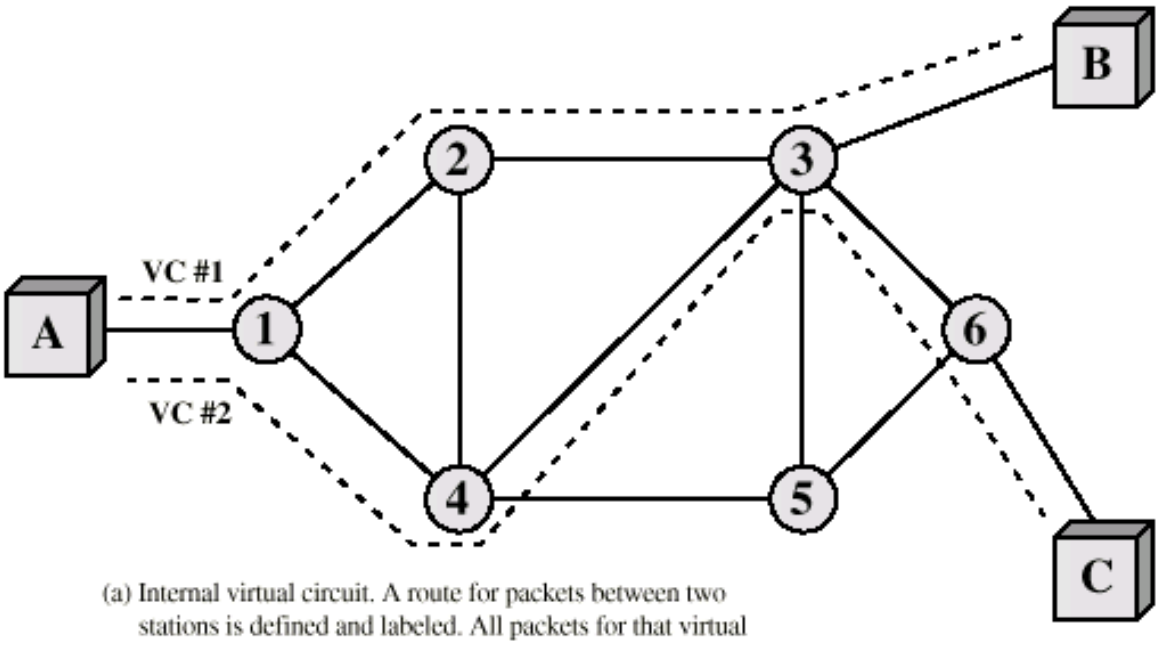

(a) Internal virtual circuit. A route for packets between two stations is defined and labeled. All packets for that virtual circuit follow the same route and arrive in the same sequence.

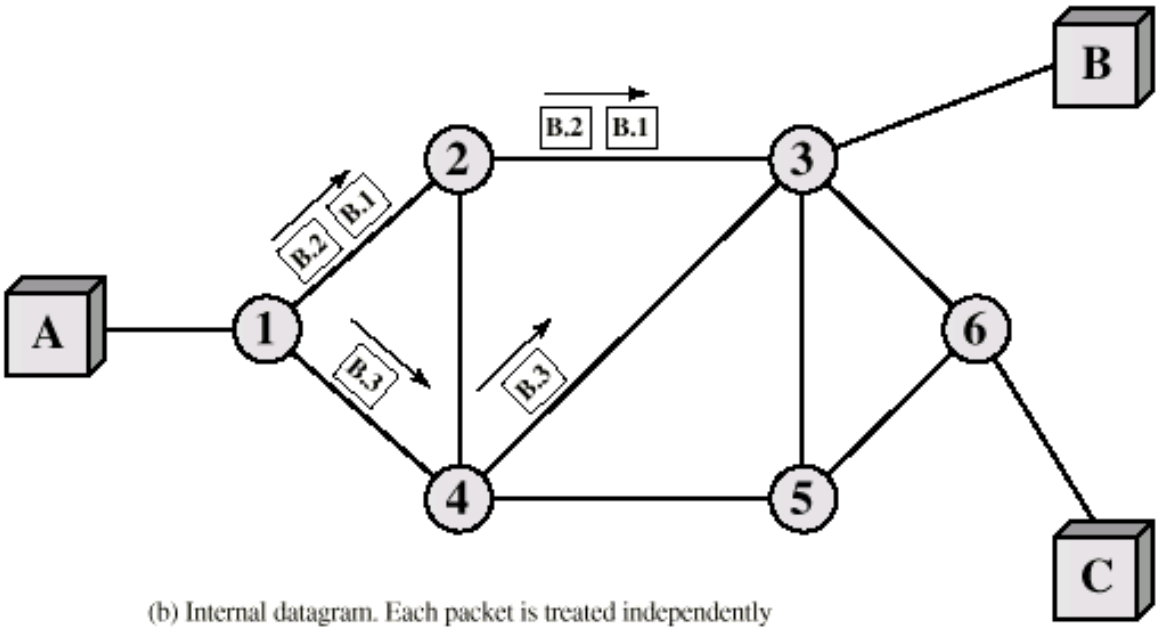

(b) Internal datagram. Each packet is treated independently by the network. Packets are labeled with a destination address and may arrive at the destination node out of sequence.

Combinations

- **External virtual circuit, internal virtual circuit**
  - » **Dedicated route through network**
- **External virtual circuit, internal datagram**
  - » **Network handles each packet separately**
  - » **Different packets for the same external virtual circuit may take different internal routes**
  - » **Network buffers at destination node for re-ordering**
- **External datagram, internal datagram**
  - » **Packets treated independently by both network and user**
- **External datagram, internal virtual circuit**
  - » **External user does not see any connections**
  - » **External user sends one packet at a time**
  - » **Network sets up logical connections**

LAN's vs. WAN's

◎Management

- » LANs have a manager
- » WANs rarely have a single manager

◎Protocol conversion

- » Simple protocol conversion in LAN’s bridges
- » Understanding of different LAN protocols in WAN’s routers, and use LAN frames as vehicles to carry WAN packets
  - – WAN's evolved by interconnecting networks
  - – Involves many different protocols and equipments

◎Routing

- » Simple routing in LAN’s bridges according to LAN addresses, such as Ethernet addresses
- » Complex routing in WAN’s routers according to WAN addresses, such as IP addresses
  - – Require more complex strategies
  - – Often many paths between nodes
  - – Paths can experience failures
  - – Congestion

◎Interconnection

- » Bridge: data link layer interconnection
- » Router: network layer interconnection

Summary

- ◎ **Concepts**
  - » **WAN**
  - » **Subnet**
  - » **Circuit switching**
  - » **Packet switching**
    - – **Datagram**
    - – **virtual circuit**
  - » **Message switching**
- ◎ **Compare circuit switching and packet switching**
- ◎ **Compare virtual circuit and datagram**
- ◎ **How packet size affects transmission time?**
- ◎ **Difference between service and internal operation**
- ◎ **Comparison between LAN and WAN**