Computer Communication & Networks

Physical Layer

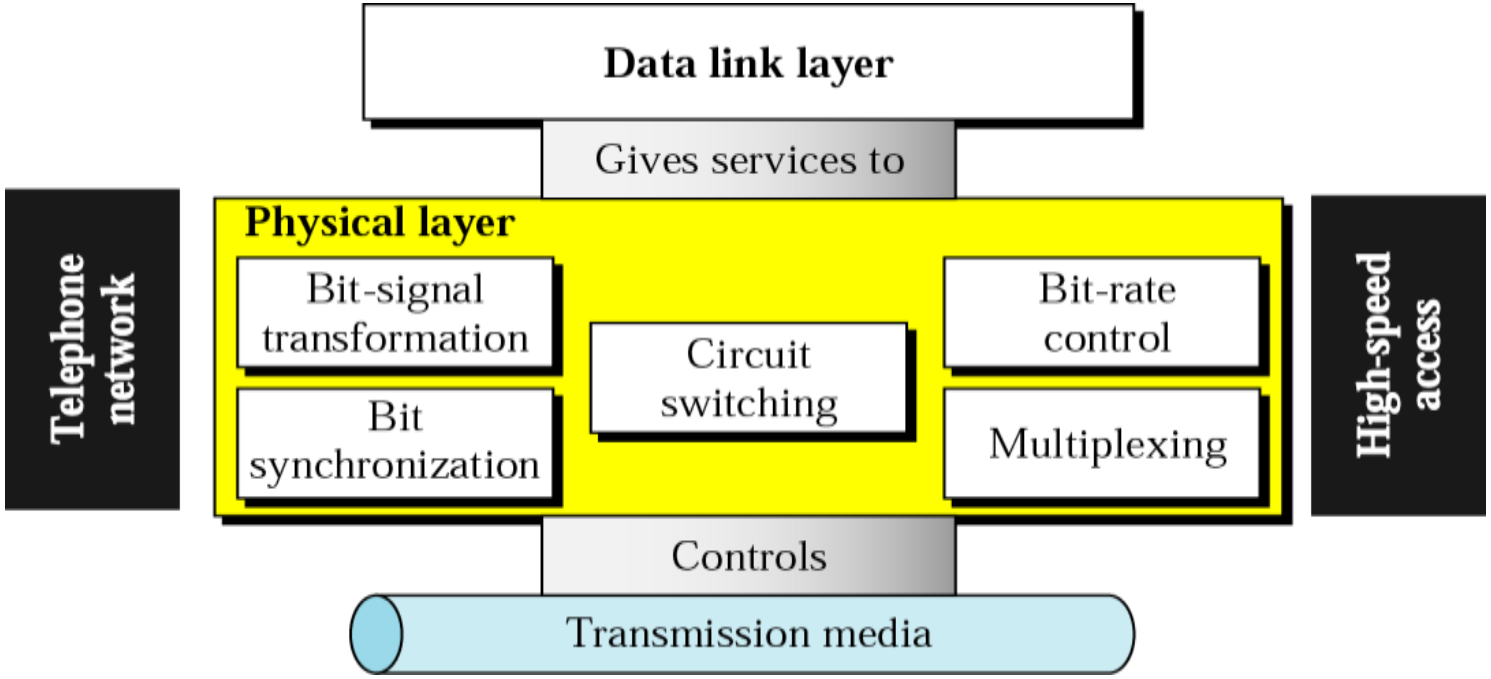

Physical Layer Topics to Cover

Signals

Digital Transmission

Analog Transmission

Multiplexing

Transmission Media

Analog & Digital

- Data can be analog or digital. The term analog data refers to information that is continuous; digital data refers to information that has discrete states. Analog data take on continuous values. Digital data take on discrete values.

Note

To be transmitted, data must be transformed to electromagnetic signals.

Note

Data can be analog or digital.
Analog data are continuous and take continuous values.
Digital data have discrete states and take discrete values.

Note

Signals can be analog or digital. Analog signals can have an infinite number of values in a range; digital signals can have only a limited number of values.

Analog Vs Digital

a. Analog signal

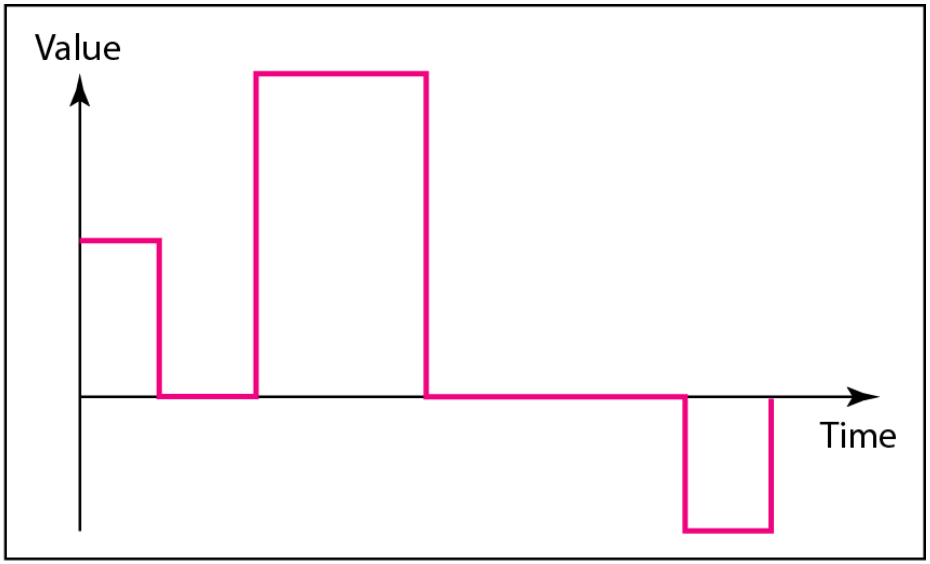

b. Digital signal

Analog Signals

Sine Wave

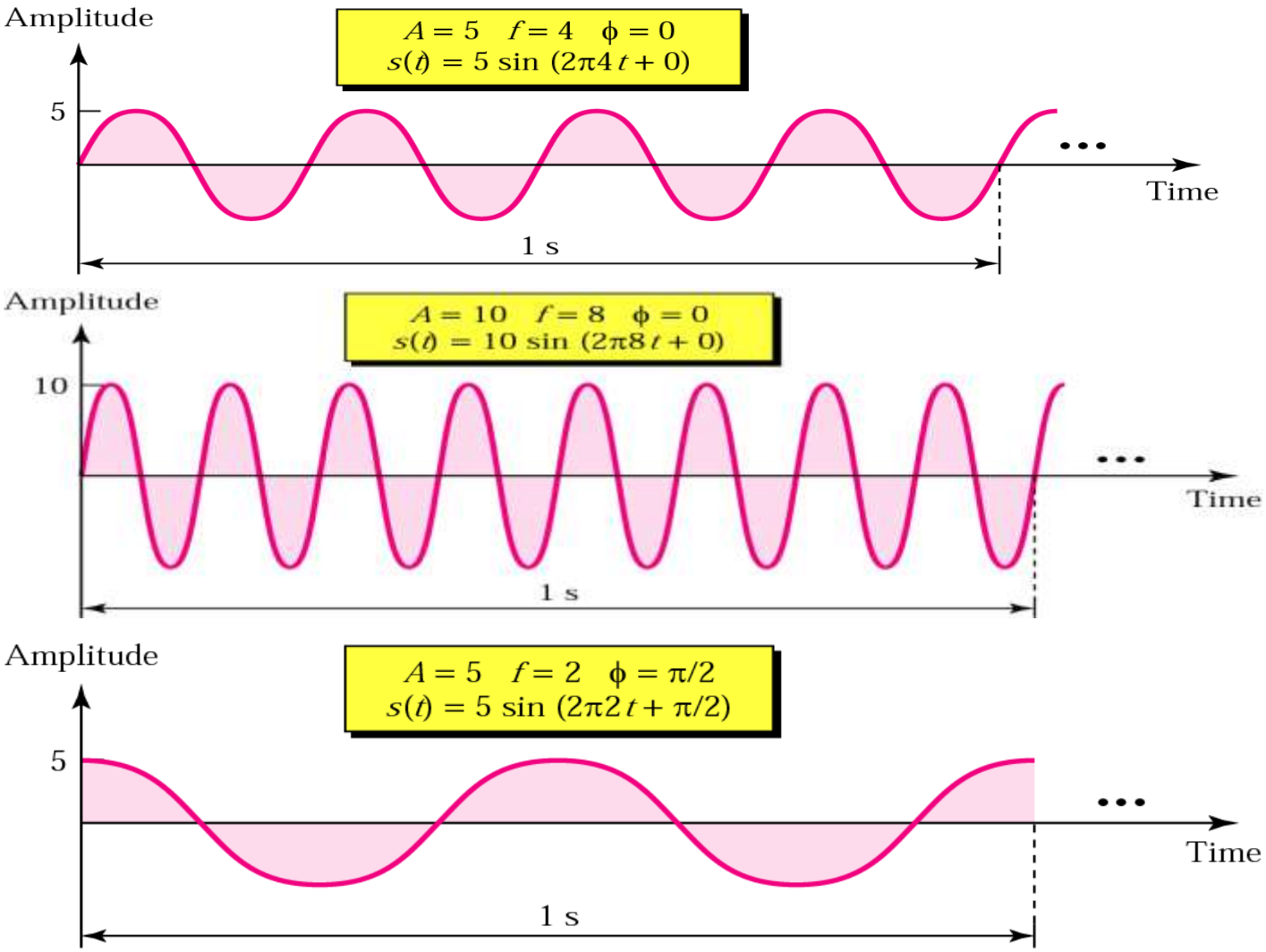
Amplitude
$A = 5 \quad f = 4 \quad \phi = 0$
$s(t) = 5 \sin(2\pi 4 t + 0)$
5
Time
1 s
Amplitude
$A = 10 \quad f = 8 \quad \phi = 0$
$s(t) = 10 \sin(2\pi 8 t + 0)$
10
Time
1 s
Amplitude
$A = 5 \quad f = 2 \quad \phi = \pi/2$
$s(t) = 5 \sin(2\pi 2 t + \pi/2)$
5
Time
1 s

Note

The bandwidth of a composite signal is the difference between the highest and the lowest frequencies contained in that signal.

Bandwidth

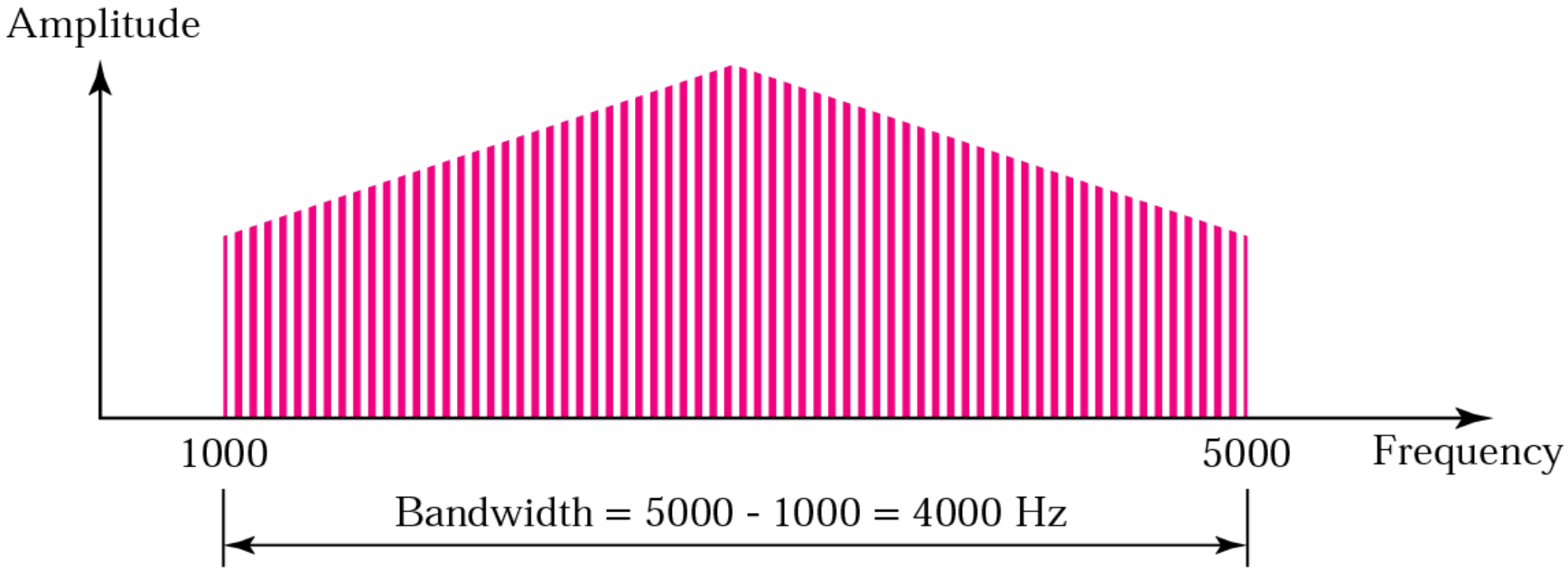

Digital Signals

Digital Signals

- In addition to being represented by an analog signal, information can also be represented by a digital signal. For example, a 1 can be encoded as a positive voltage and a 0 as zero voltage. A digital signal can have more than two levels. In this case, we can send more than 1 bit for each level.

Digital Signal

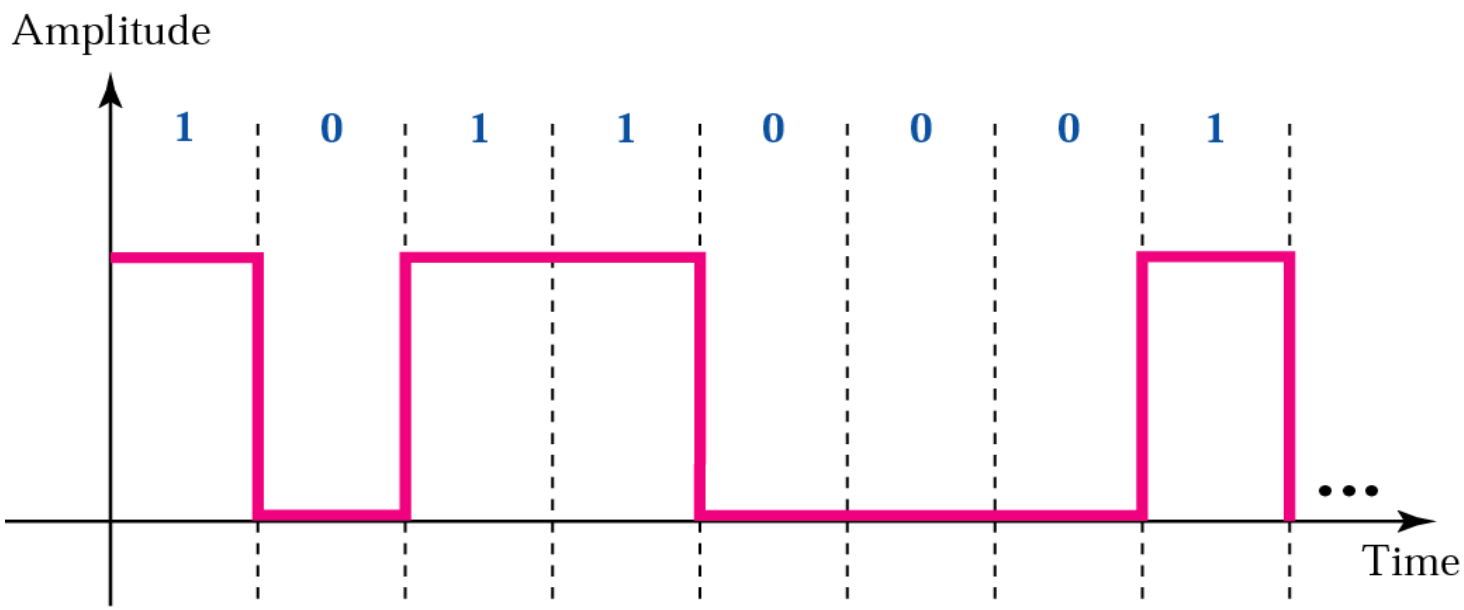

Bit Rate & Bit Interval (contd.)

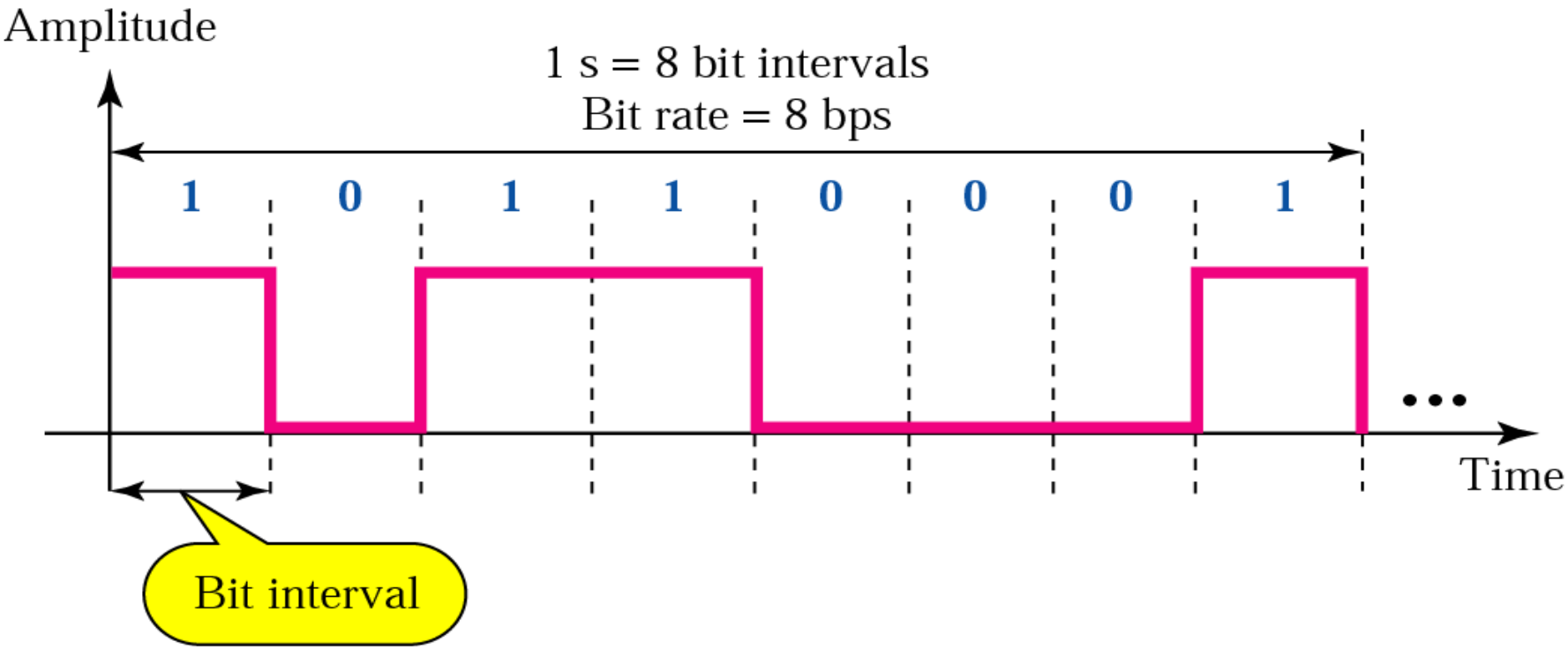

Bit Interval and Bit Rate

Example

A digital signal has a bit rate of 2000 bps. What is the duration of each bit (bit interval)

Solution

The bit interval is the inverse of the bit rate.

Bit interval = 1/ 2000 s = 0.000500 s
= 0.000500 x 10^6 μs = 500 μs

Note

The bit rate and the bandwidth are proportional to each other.

Base Band Transmission

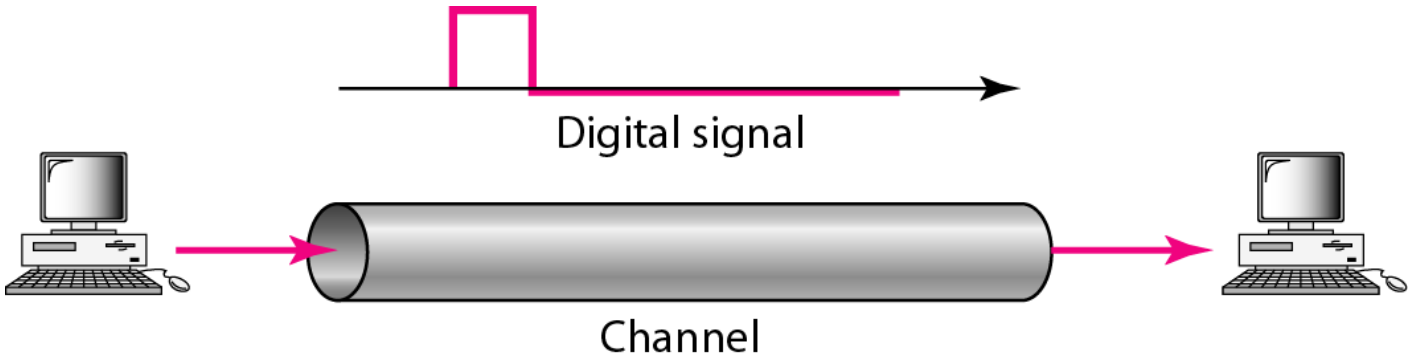

Analog Vs Digital

Analog versus digital signals

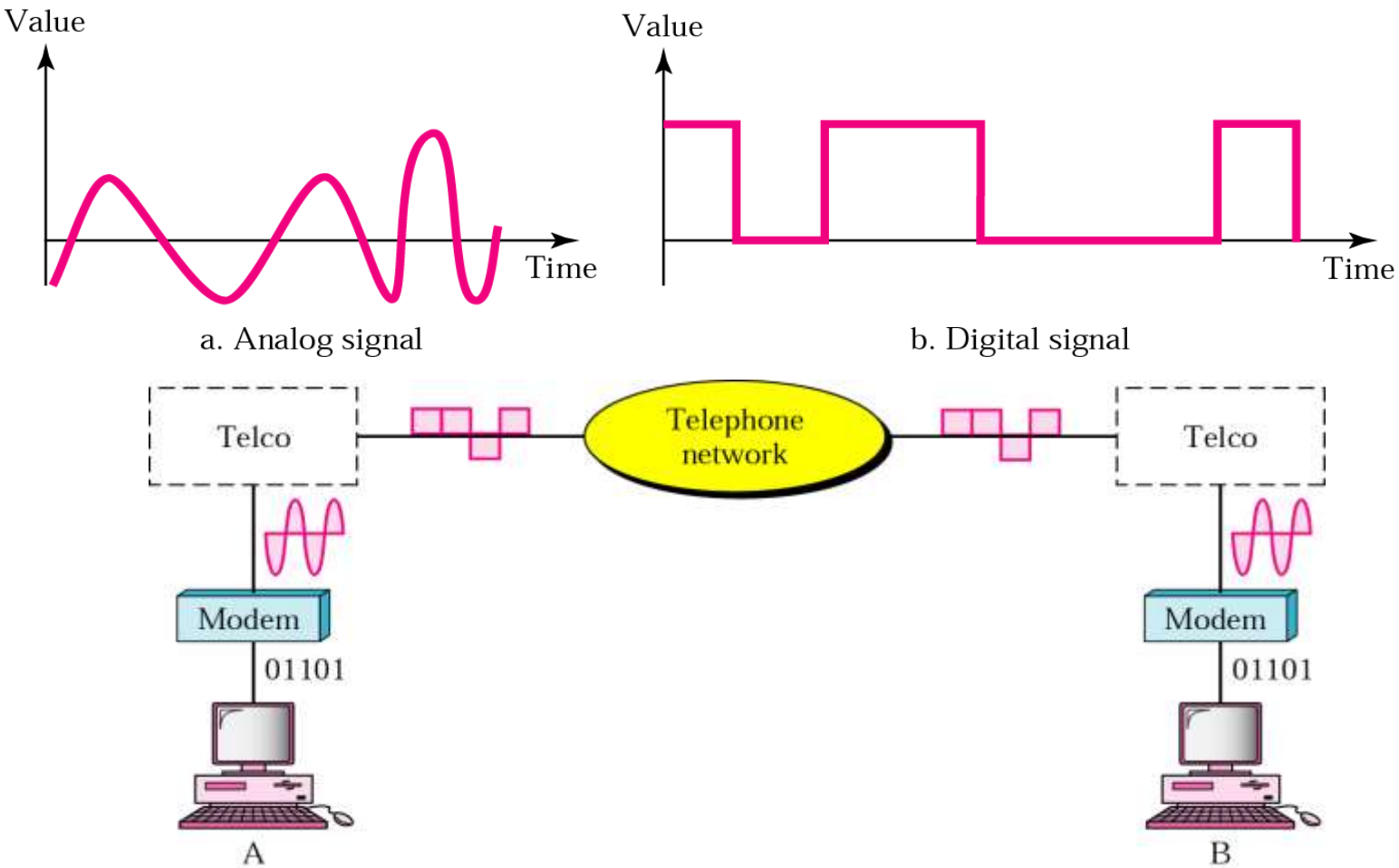

Low Pass & Band Pass

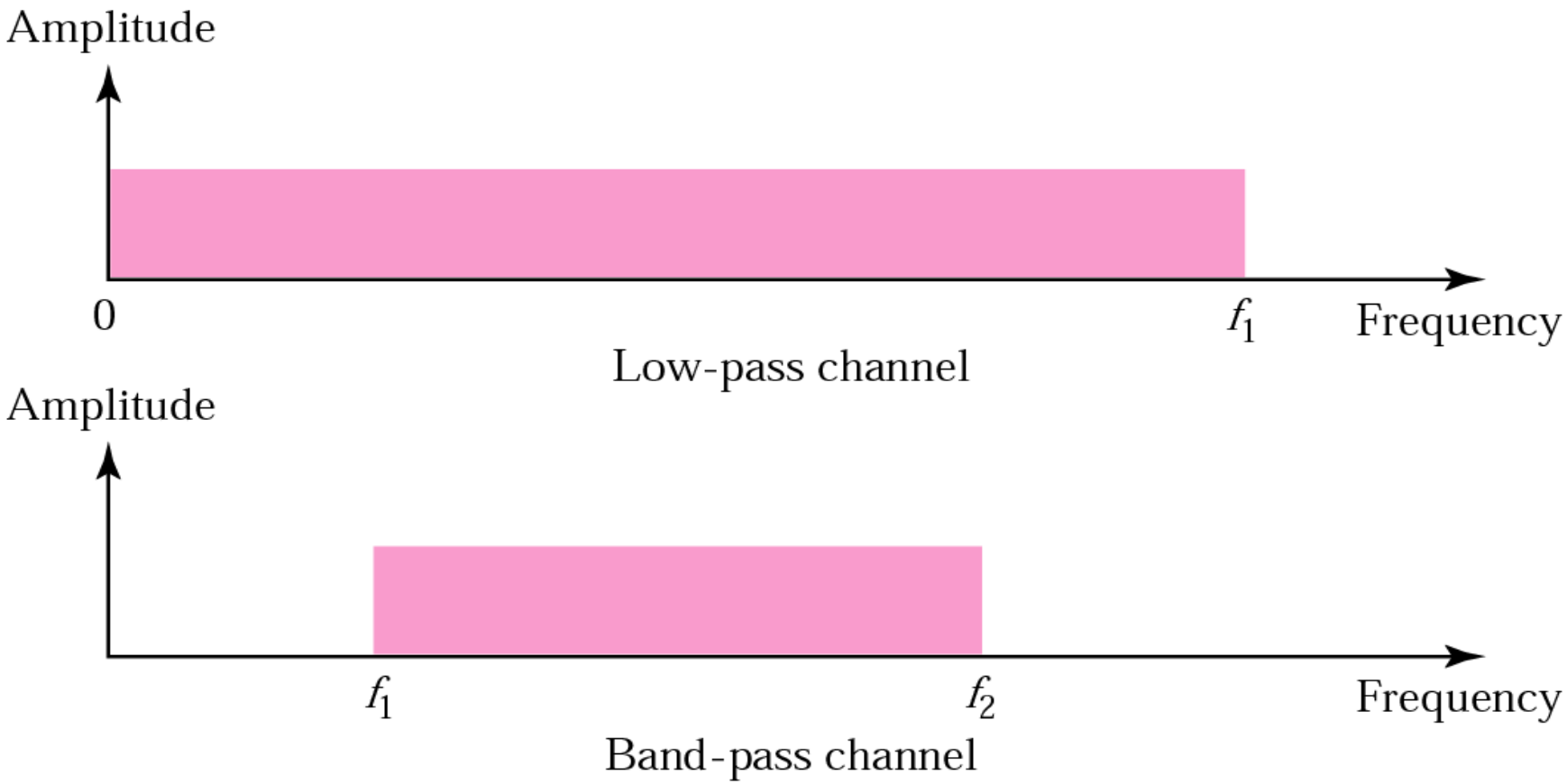

Example 3.26

Suppose a signal travels through a transmission medium and its power is reduced to one-half. This means that P_2 is $(1/2)P_1$. In this case, the attenuation (loss of power) can be calculated as

$$10 \log_{10} \frac{P_2}{P_1} = 10 \log_{10} \frac{0.5 P_1}{P_1} = 10 \log_{10} 0.5 = 10(-0.3) = -3 \text{ dB}$$

A loss of 3 dB (–3 dB) is equivalent to losing one-half the power.

Example 3.29

Sometimes the decibel is used to measure signal power in milliwatts. In this case, it is referred to as dB_m and is calculated as $dB_m = 10 \log10 P_m$, where P_m is the power in milliwatts. Calculate the power of a signal with $dB_m = -30$.

Solution

We can calculate the power in the signal as

$$\mathrm{dB_m} = 10 \log_{10} P_m = -30$$

$$\log_{10} P_m = -3 \qquad P_m = 10^{-3}\ \mathrm{mW}$$

Data Rate Limits

Data Rate Limits

- A very important consideration in data communications is how fast we can send data, in bits per second, over a channel. Data rate depends on three factors:

  1. The bandwidth available
  2. The level of the signals we use
  3. The quality of the channel (the level of noise)

Noiseless Channel: Nyquist Bit Rate

- Defines theoretical maximum bit rate for Noiseless Channel:

- Bit Rate=2 X Bandwidth X $\log_2 L$

Example

Consider a noiseless channel with a bandwidth of 3000 Hz transmitting a signal with two signal levels. The maximum bit rate can be calculated as

$$\text{Bit Rate} = 2 \times 3000 \times \log_2 2 = 6000 \text{ bps}$$

Example 8

Consider the same noiseless channel, transmitting a signal with four signal levels (for each level, we send two bits). The maximum bit rate can be calculated as:

$$\text{Bit Rate} = 2 \times 3000 \times \log_2 4 = 12{,}000 \text{ bps}$$

Note

Increasing the levels of a signal may reduce the reliability of the system.

Noisy Channel: Shannon Capacity

- Defines theoretical maximum bit rate for Noisy Channel:

- Capacity=Bandwidth X $\log_2(1+SNR)$

Example

Consider an extremely noisy channel in which the value of the signal-to-noise ratio is almost zero. In other words, the noise is so strong that the signal is faint. For this channel the capacity is calculated as

$$C = B \log_2 (1 + SNR) = B \log_2 (1 + 0)$$

$$= B \log_2 (1) = B \times 0 = 0$$

Example

We can calculate the theoretical highest bit rate of a regular telephone line. A telephone line normally has a bandwidth of 4KHz. The signal-to-noise ratio is usually 3162. For this channel the capacity is calculated as

$$C = B \log_2 (1 + SNR) = 3000 \log_2 (1 + 3162)$$
$$= 3000 \log_2 (3163)$$

$$C = 3000 \times 11.62 = 34{,}860 \text{ bps}$$

Example

We have a channel with a 1 MHz bandwidth. The SNR for this channel is 63; what is the appropriate bit rate and signal level?

Solution

First, we use the Shannon formula to find our upper limit.

$$C = B \log_2 (1 + SNR) = 10^6 \log_2 (1 + 63) = 10^6 \log_2 (64) = 6 \text{ Mbps}$$

Then we use the Nyquist formula to find the number of signal levels.

$$6 \text{ Mbps} = 2 \times 1 \text{ MHz} \times \log_2 L \rightarrow L = 8$$

Note

The Shannon capacity gives us the upper limit; the Nyquist formula tells us how many signal levels we need.

Transmission Impairments

Transmission Imapairments

- Signals travel through transmission media, which are not perfect. The imperfection causes signal impairment. This means that the signal at the beginning of the medium is not the same as the signal at the end of the medium. What is sent is not what is received. Three causes of impairment are ***attenuation*, *distortion*,** and ***noise*.**

Transmission Impairments

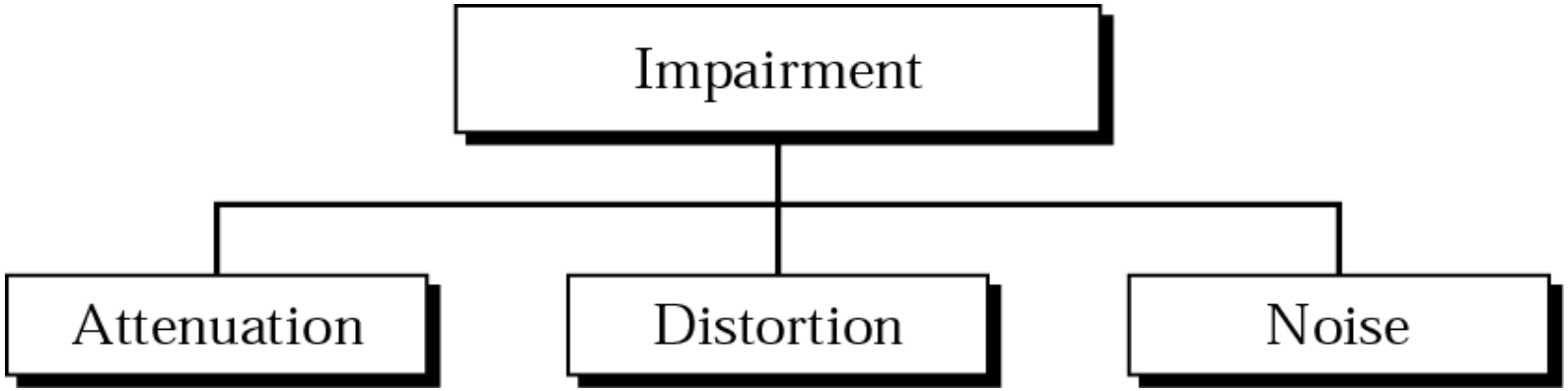

Signal Distortion

attenuation

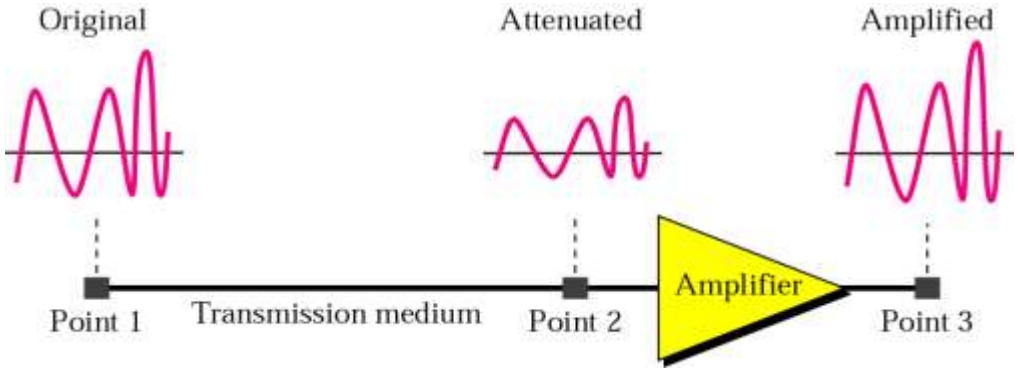

distortion

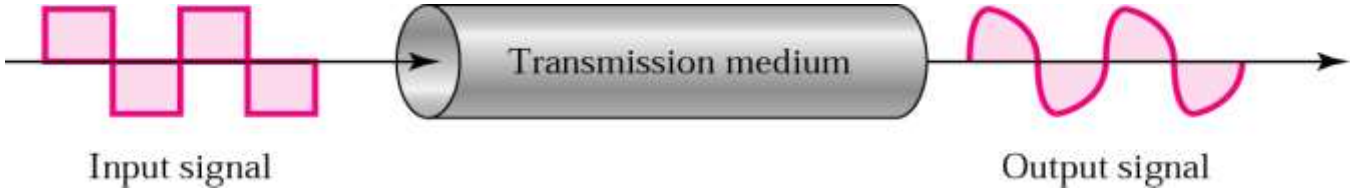

noise

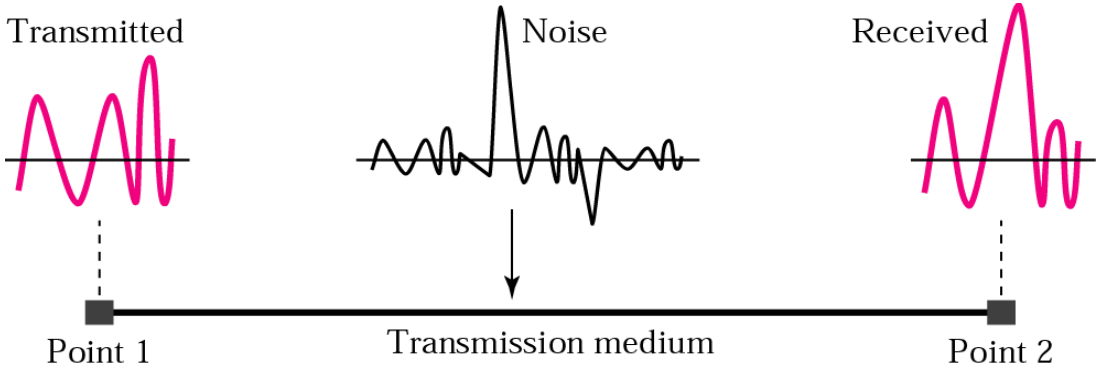

Performance

- One important issue in networking is the performance of the network—how good is it?

Performance

- Bandwidth
- Throughput
- Latency (Delay)
- Bandwidth-Delay Product

Throughput

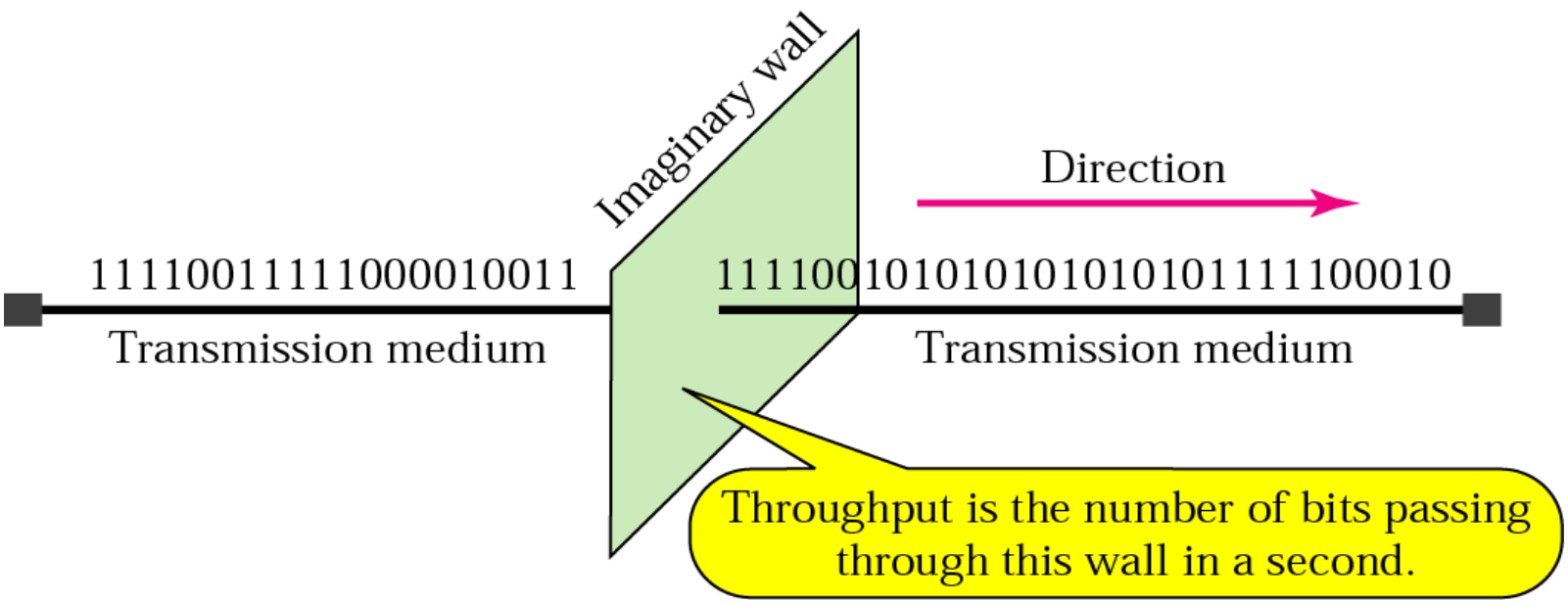
Imaginary wall
Direction
1111001111100001001 1
1111001010101010101011111100010
Transmission medium
Transmission medium
Throughput is the number of bits passing through this wall in a second.

Propagation Time

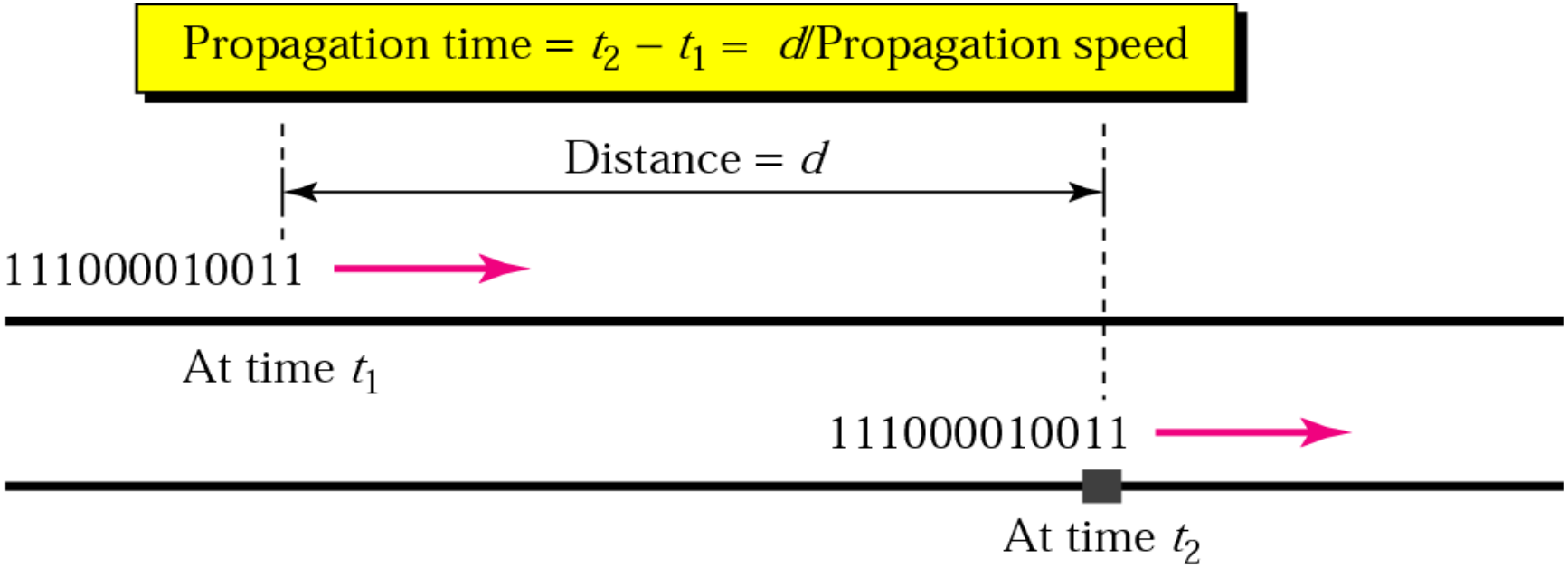

Note

The bandwidth-delay product defines the number of bits that can fill the link.

Bandwidth Delay Product

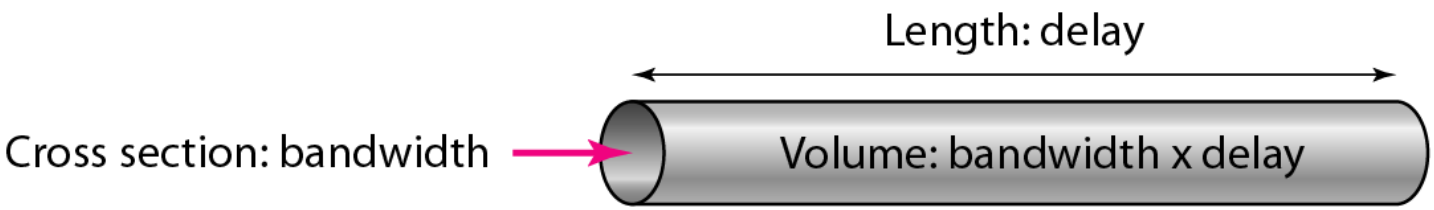

Readings

- Chapter 3 (B.A Forouzan)
  - Section 3.3, 3.4, 3.5, 3.6