Chapter 2

The OSI Model and the TCP/IP Protocol Suite

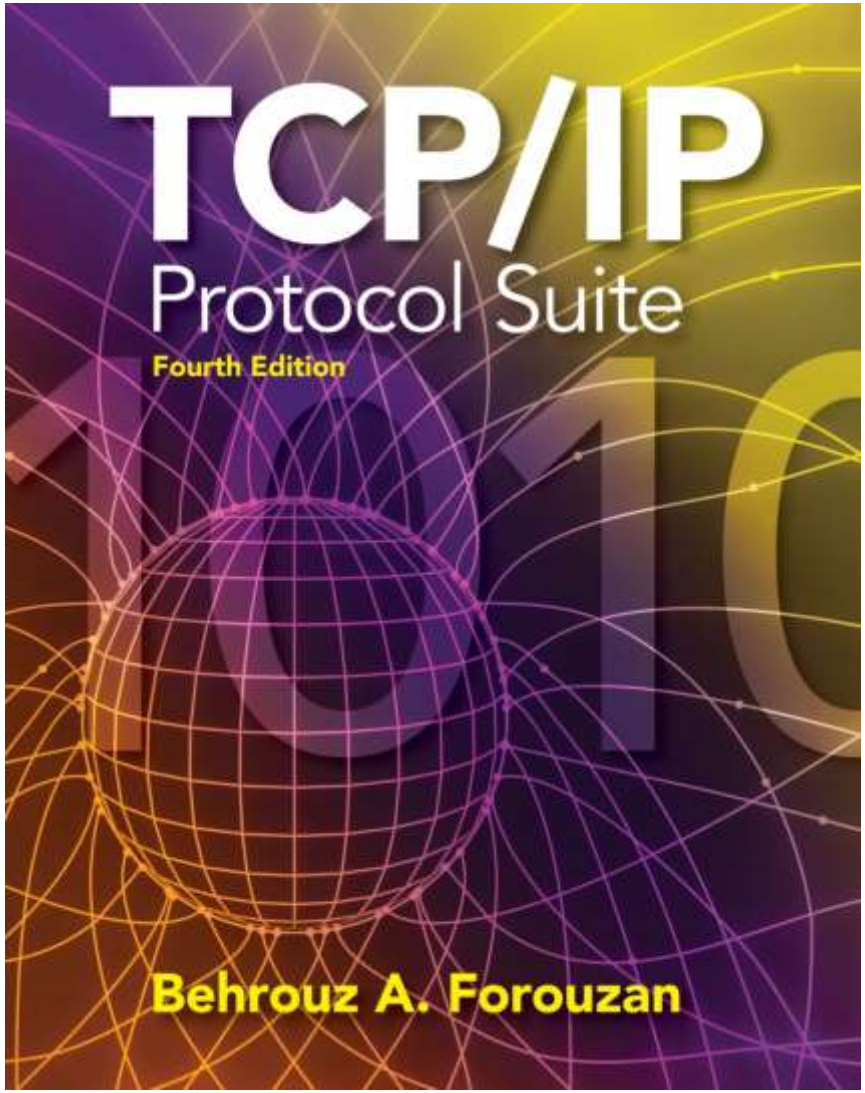

Copyright © The McGraw-Hill Companies, Inc. Permission required for reproduction or display.

OBJECTIVES:

- To discuss the idea of multiple layering in data communication and networking and the interrelationship between layers.
- To discuss the OSI model and its layer architecture and to show the interface between the layers.
- To briefly discuss the functions of each layer in the OSI model.
- To introduce the TCP/IP protocol suite and compare its layers with the ones in the OSI model.
- To show the functionality of each layer in the TCP/IP protocol with some examples.
- To discuss the addressing mechanism used in some layers of the TCP/IP protocol suite for the delivery of a message from the source to the destination.

Chapter Outline

2.1 Protocol Layers

2.2 The OSI Model

2.3 TCP/IP Protocol Suite

2.4 Addressing

2-1 PROTOCOL LAYERS

In Chapter 1, we discussed that a protocol is required when two entities need to communicate. When communication is not simple, we may divide the complex task of communication into several layers. In this case, we may need several protocols, one for each layer.

Let us use a scenario in communication in which the role of protocol layering may be better understood. We use two examples. In the first example, communication is so simple that it can occur in only one layer.

Topics Discussed in the Section

- ✓ **Hierarchy**
- ✓ **Services**

Example 2.1

Assume Maria and Ann are neighbors with a lot of common ideas. However, Maria speaks only Spanish, and Ann speaks only English. Since both have learned the sign language in their childhood, they enjoy meeting in a cafe a couple of days per week and exchange their ideas using signs. Occasionally, they also use a bilingual dictionary. Communication is face to face and Happens in one layer as shown in Figure 2.1.

Figure 2.1 *Example 2.1*

Example 2.2

Now assume that Ann has to move to another town because of her job. Before she moves, the two meet for the last time in the same cafe. Although both are sad, Maria surprises Ann when she opens a packet that contains two small machines. The first machine can scan and transform a letter in English to a secret code or vice versa. The other machine can scan and translate a letter in Spanish to the same secret code or vice versa. Ann takes the first machine; Maria keeps the second one. The two friends can still communicate using the secret code, as shown in Figure 2.2.

Figure 2.2 *Example 2.2*

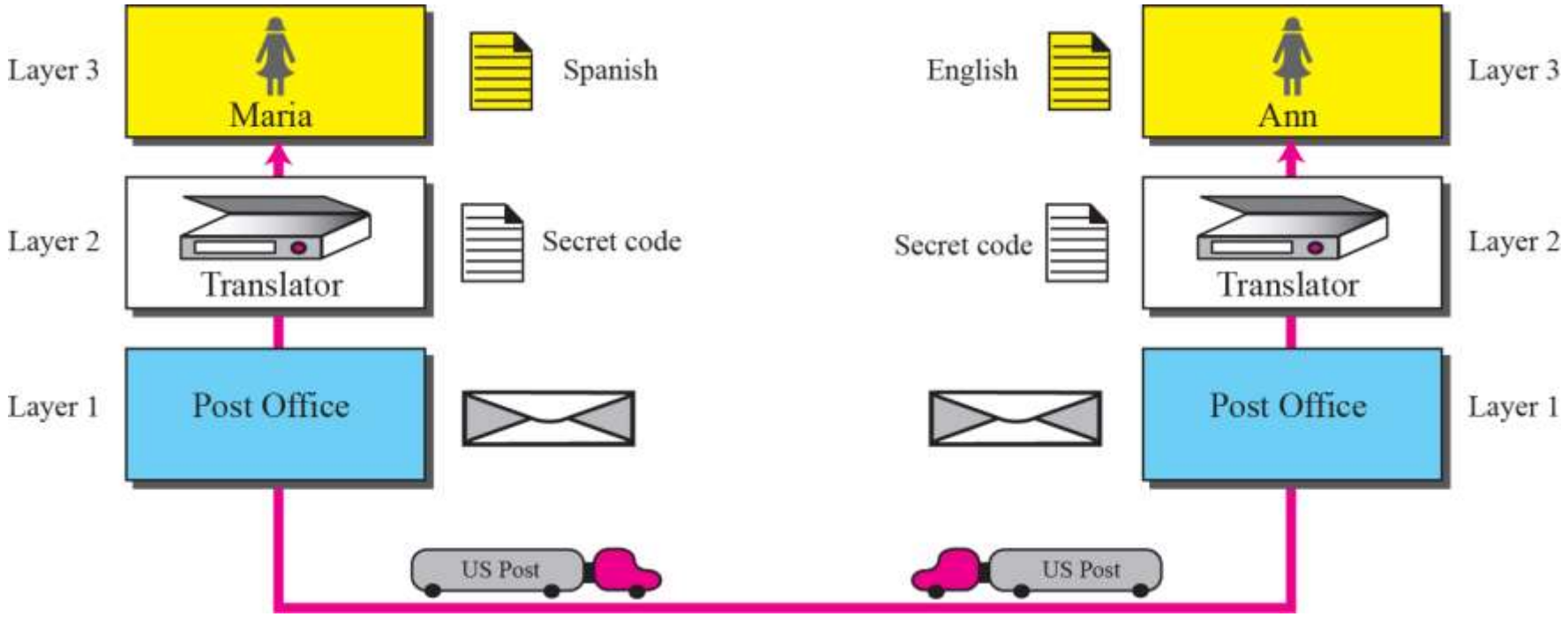

2-2 THE OSI MODEL

Established in 1947, the *International Standards Organization (ISO)* is a multinational body dedicated to worldwide agreement on international standards. Almost three-fourths of countries in the world are represented in the ISO. An ISO standard that covers all aspects of network communications is the *Open Systems Interconnection (OSI)* model. It was first introduced in the late 1970s.

Topics Discussed in the Section

- ✓ **Layered Architecture**
- ✓ **Layer-to-layer Communication**
- ✓ **Encapsulation**
- ✓ **Layers in the OSI Model**
- ✓ **Summary of OSI Layers**

Note

ISO is the organization;
OSI is the model.

Figure 2.3 *The OSI model*

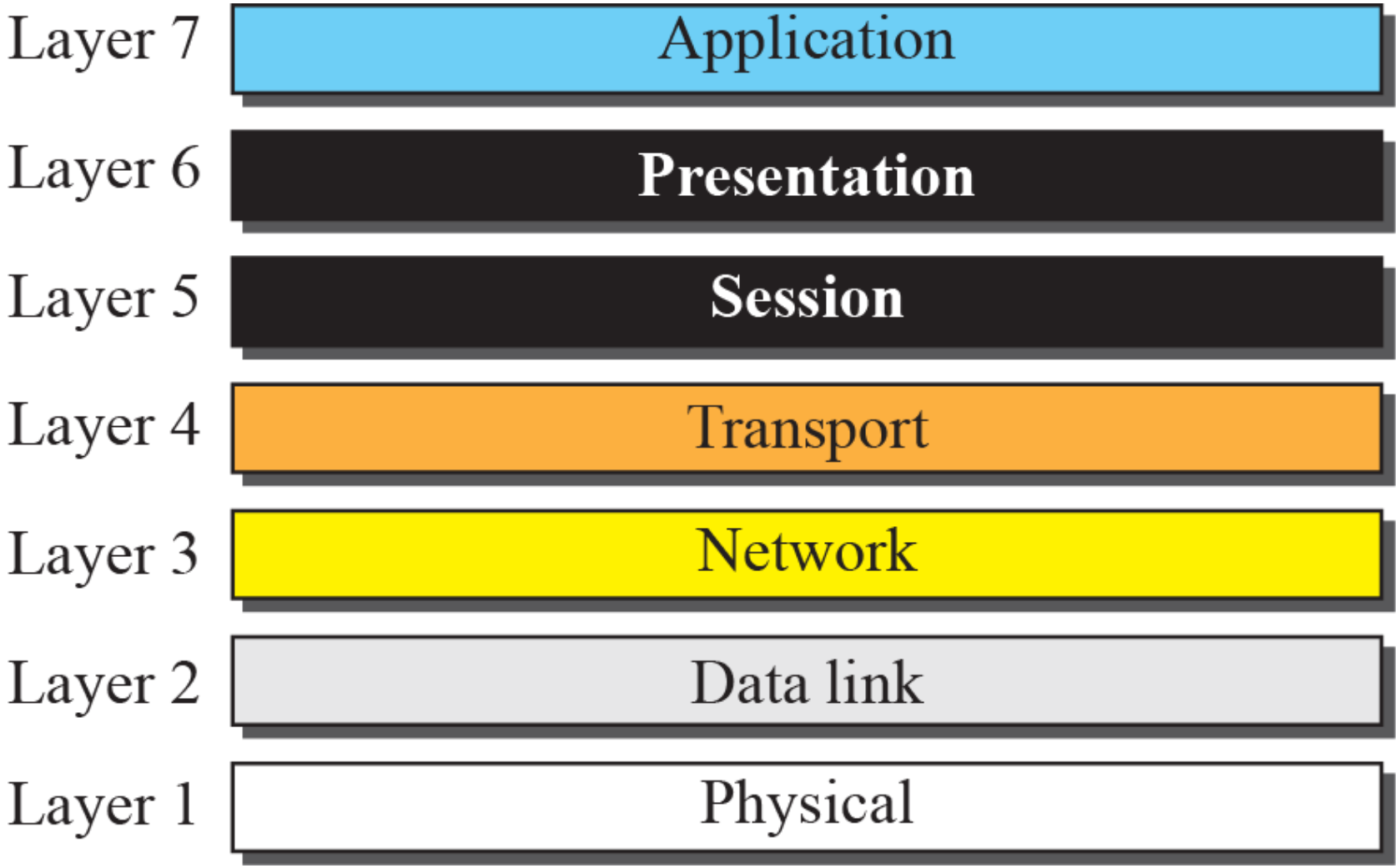

Figure 2.4 *OSI layers*

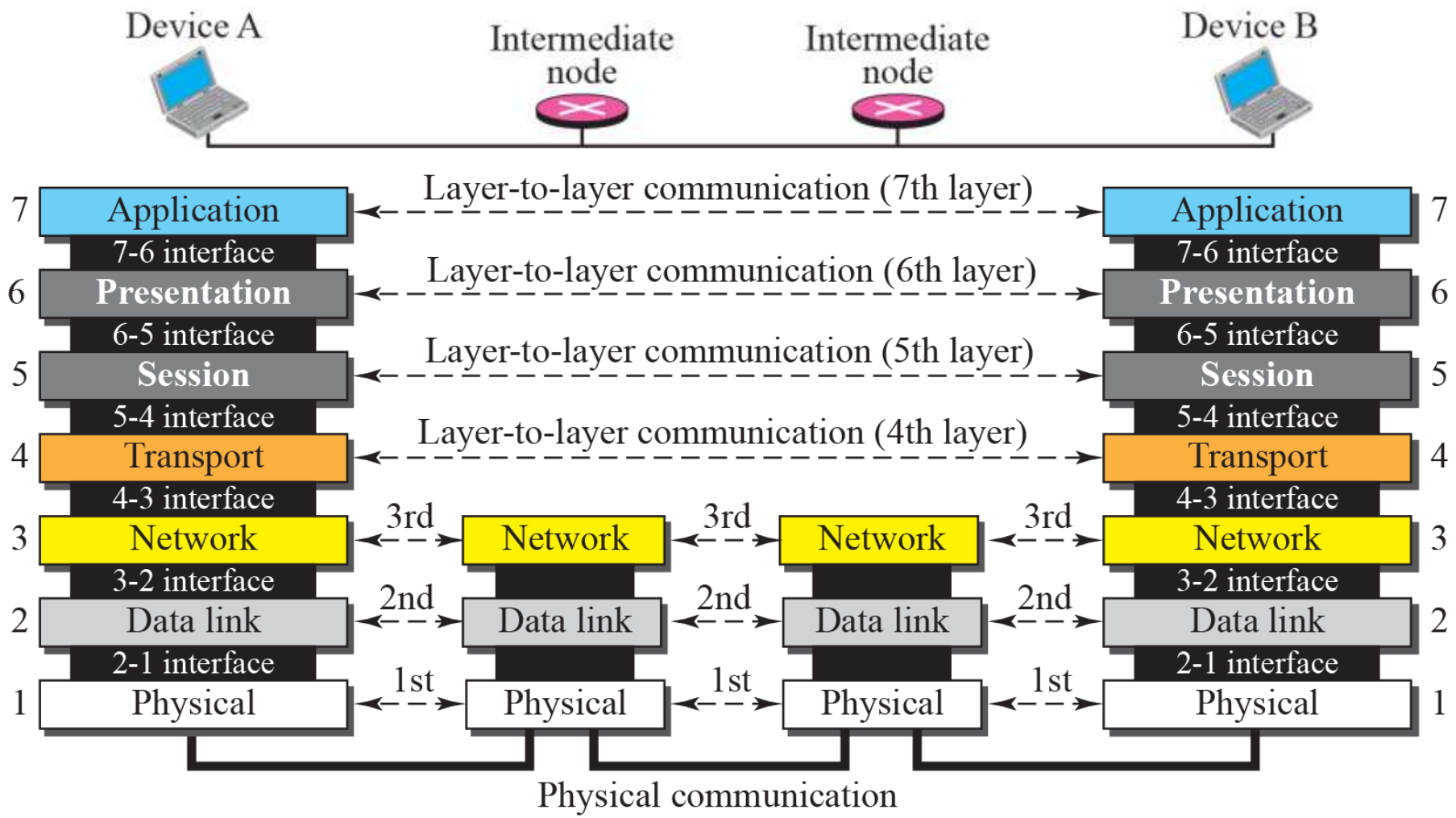

Figure 2.5 *An exchange using the OSI model*

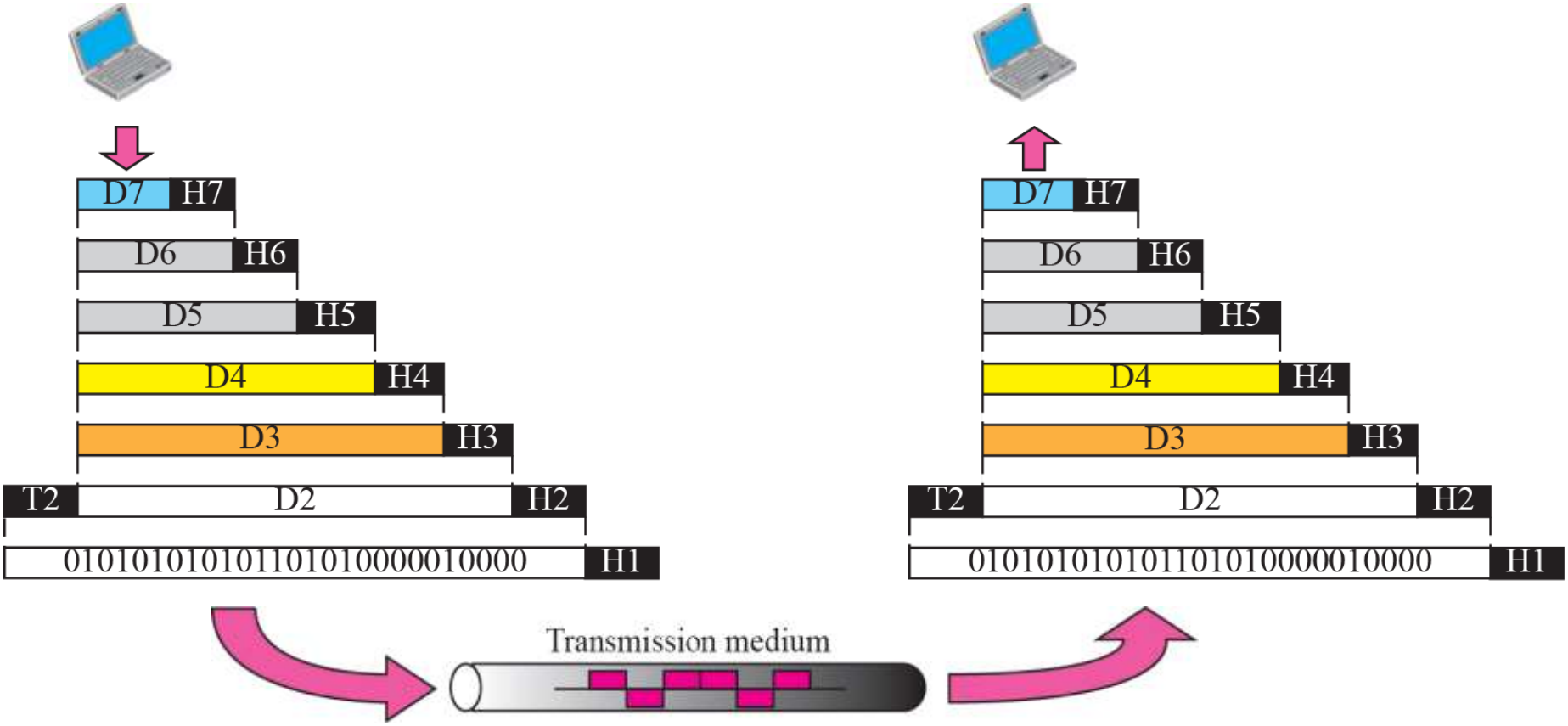

Note

The physical layer is responsible for moving individual bits from one (node) to the next.

Figure 2.6 *Summary of OSI Layers*

Application	To allow access to network resources	7
Presentation	To translate, encrypt, and compress data	6
Session	To establish, manage, and terminate sessions	5
Transport	To provide reliable process-to-process message delivery and error recovery	4
Network	To move packets from source to destination; to provide internetworking	3
Data link	To organize bits into frames; to provide hop-to-hop delivery	2
Physical	To transmit bits over a medium; to provide mechanical and electrical specifications	1

2-3 TCP/IP PROTOCOL SUITE

The TCP/IP protocol suite was developed prior to the OSI model. Therefore, the layers in the TCP/IP protocol suite do not match exactly with those in the OSI model. The original TCP/IP protocol suite was defined as four software layers built upon the hardware. Today, however, TCP/IP is thought of as a five-layer model with the layers named similarly to the ones in the OSI model. Figure 2.7 shows both configurations.

Topics Discussed in the Section

- ✓ **Comparison between OSI and TCP/IP**
- ✓ **Layers in the TCP/IP Suite**

Figure 2.7 *Layers in the TCP/IP Protocol Suite*

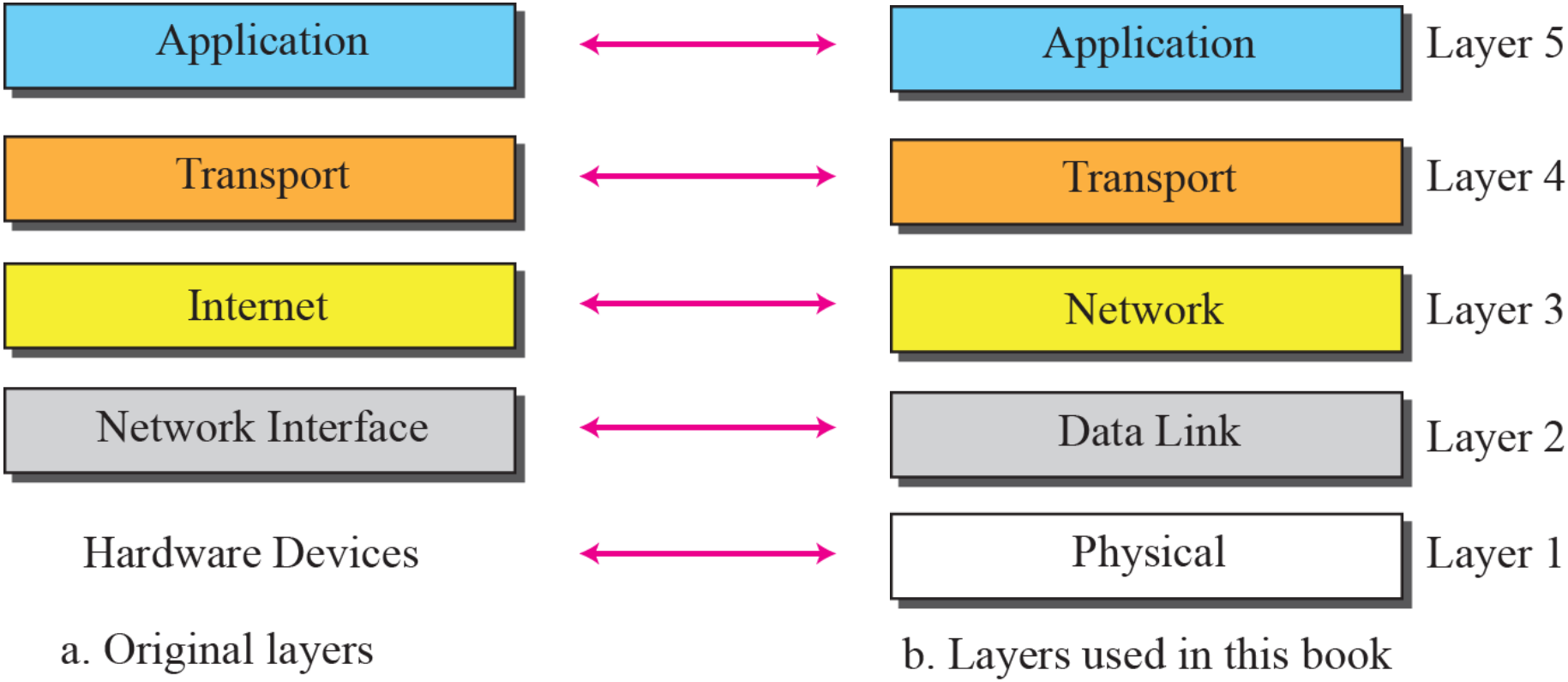

Figure 2.8 *TCP/IP and OSI model*

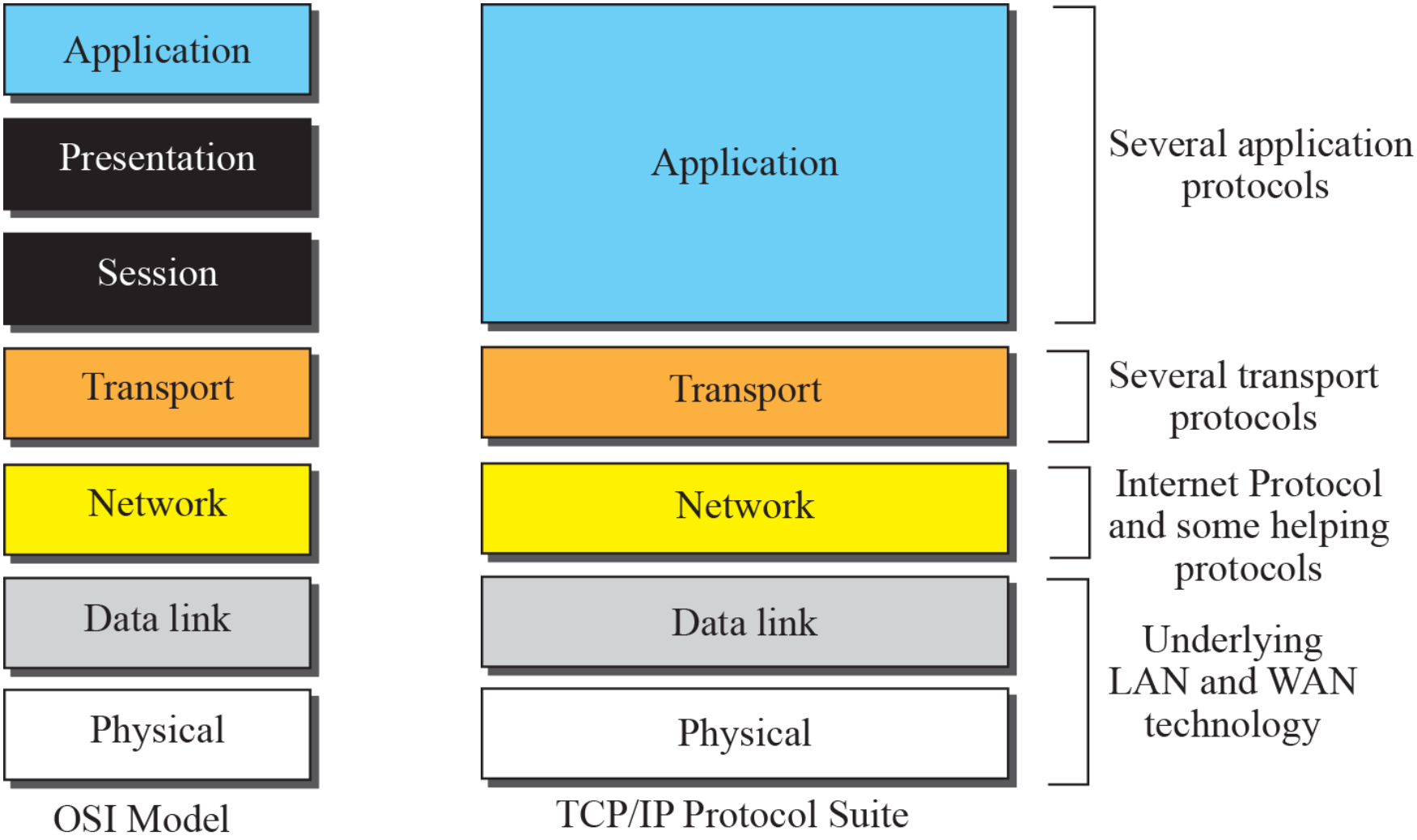

Figure 2.9 *A private internet*

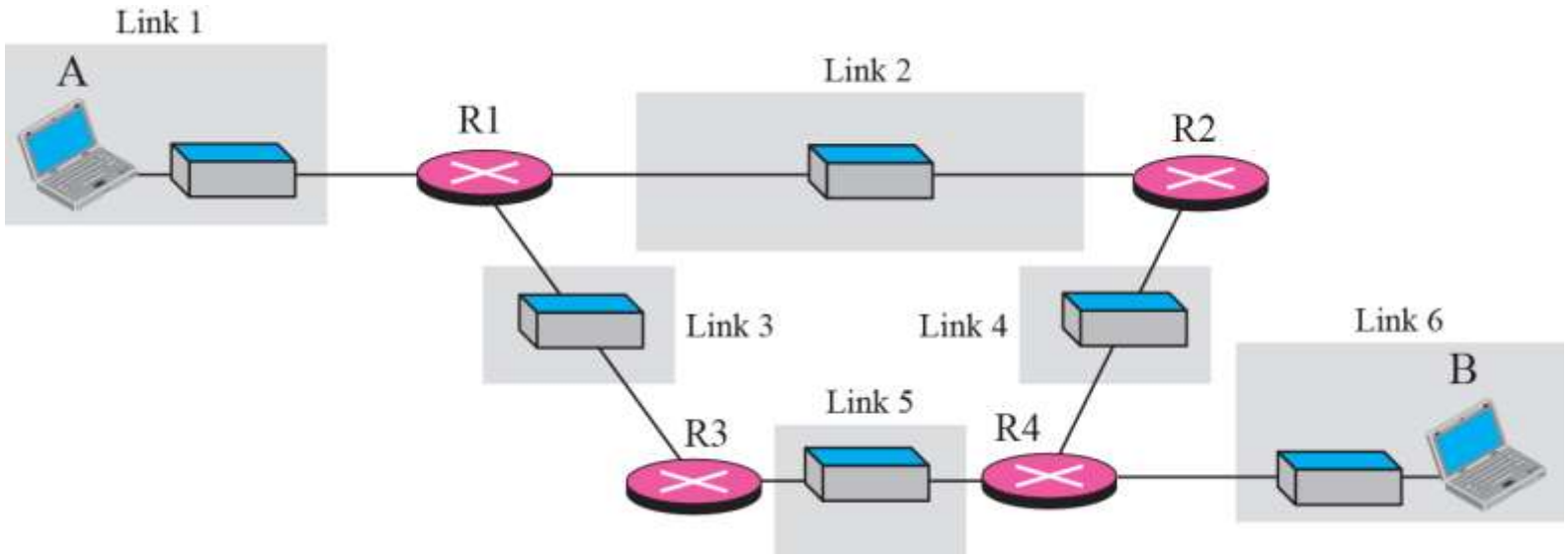

Figure 2.10 *Communication at the physical layer*

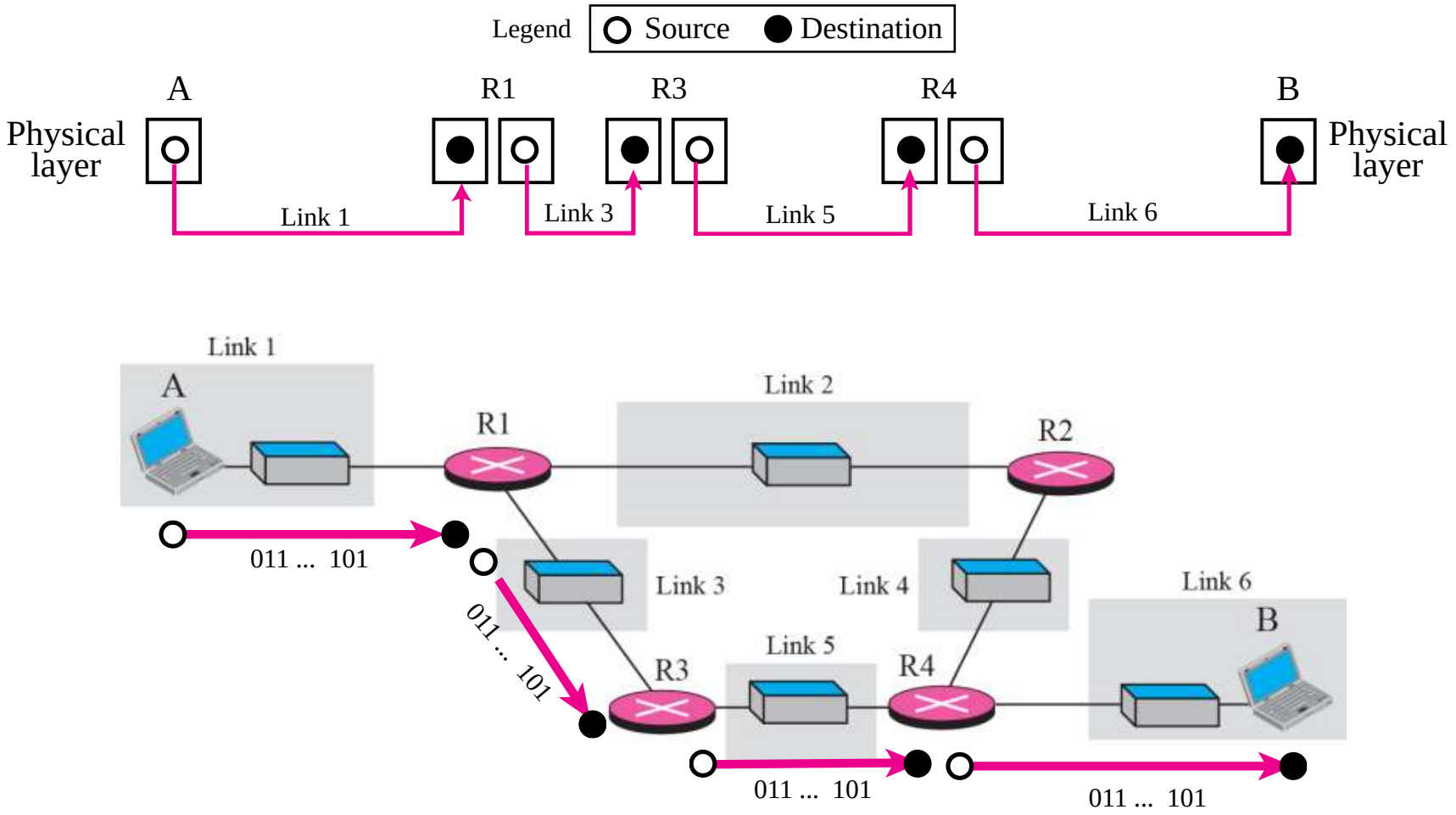

Note

The unit of communication at the physical layer is a bit.

Figure 2.11 *Communication at the data link layer*

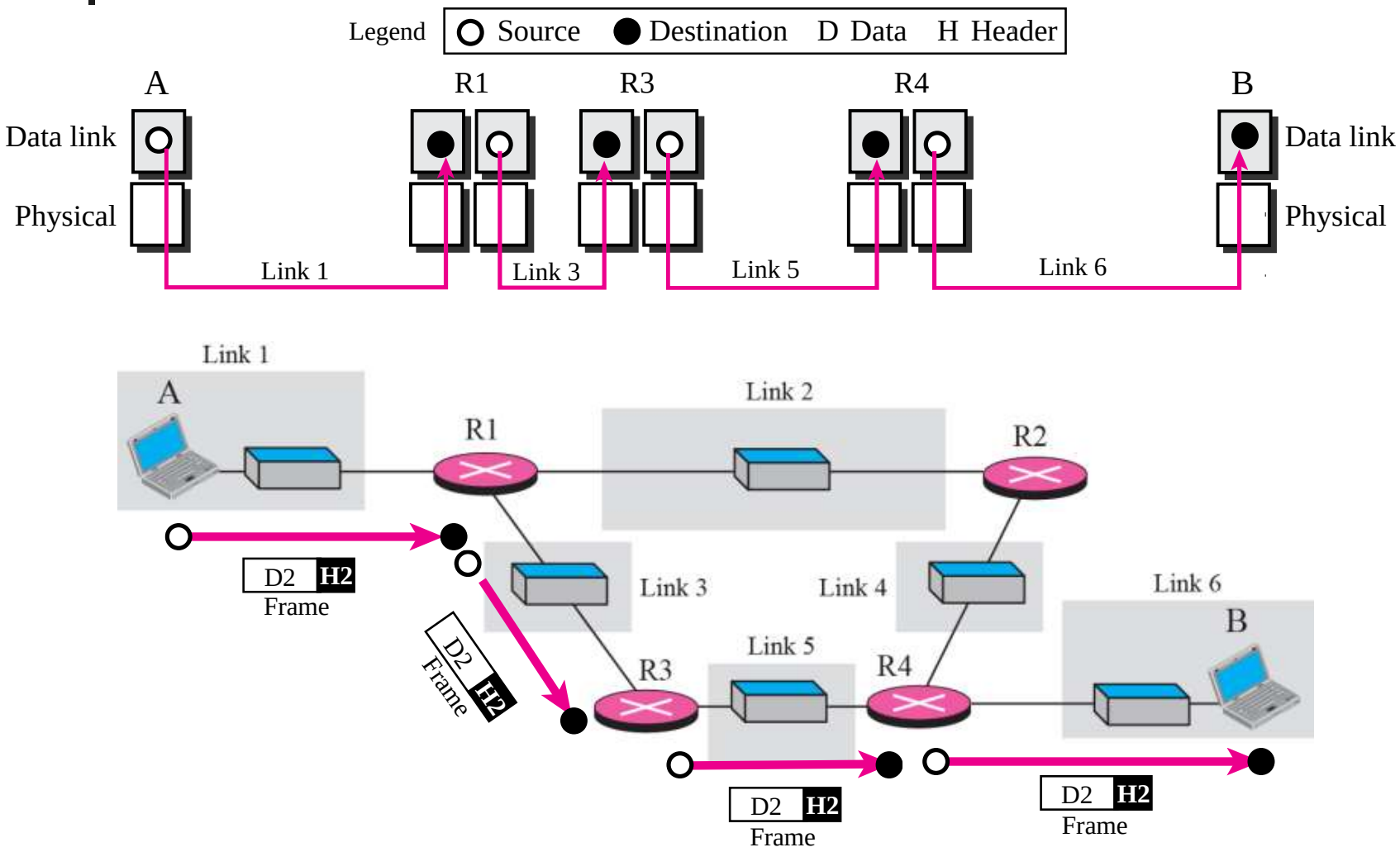

Note

The unit of communication at the data link layer is a frame.

Figure 2.12 *Communication at the network layer*

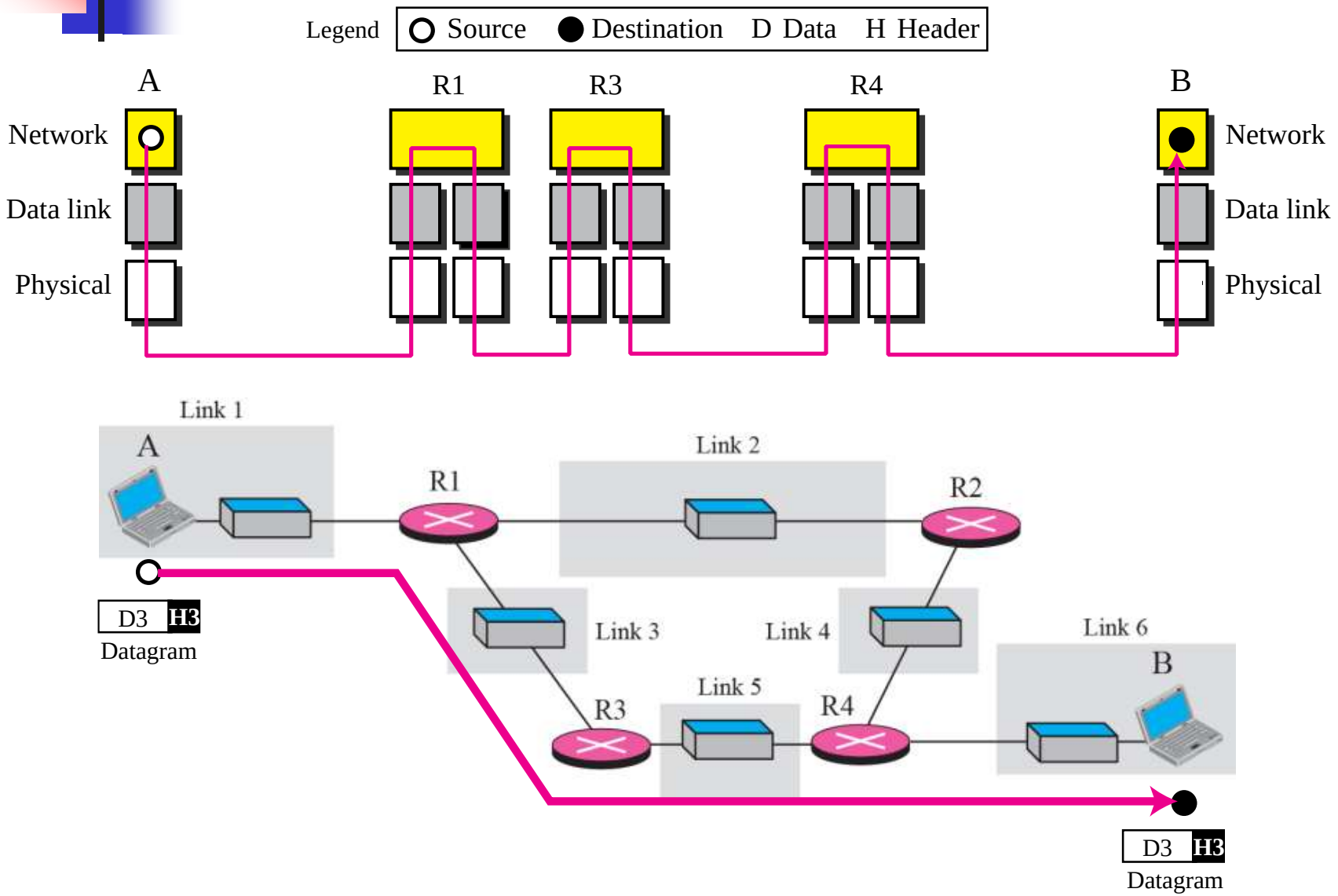

Note

The unit of communication at the network layer is a datagram.

Figure 2.13 *Communication at transport layer*

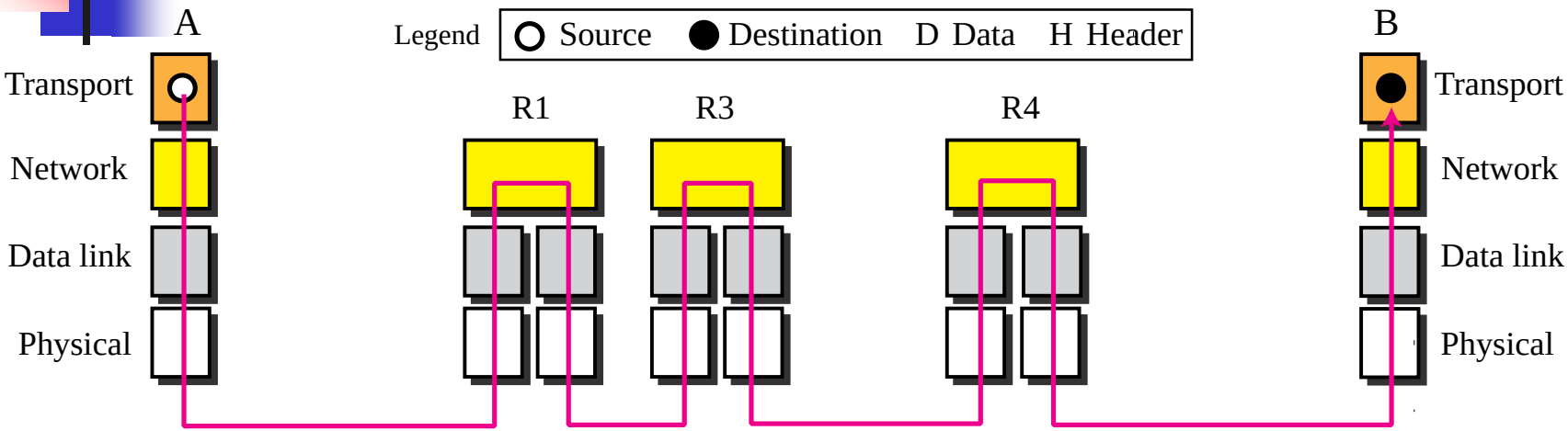

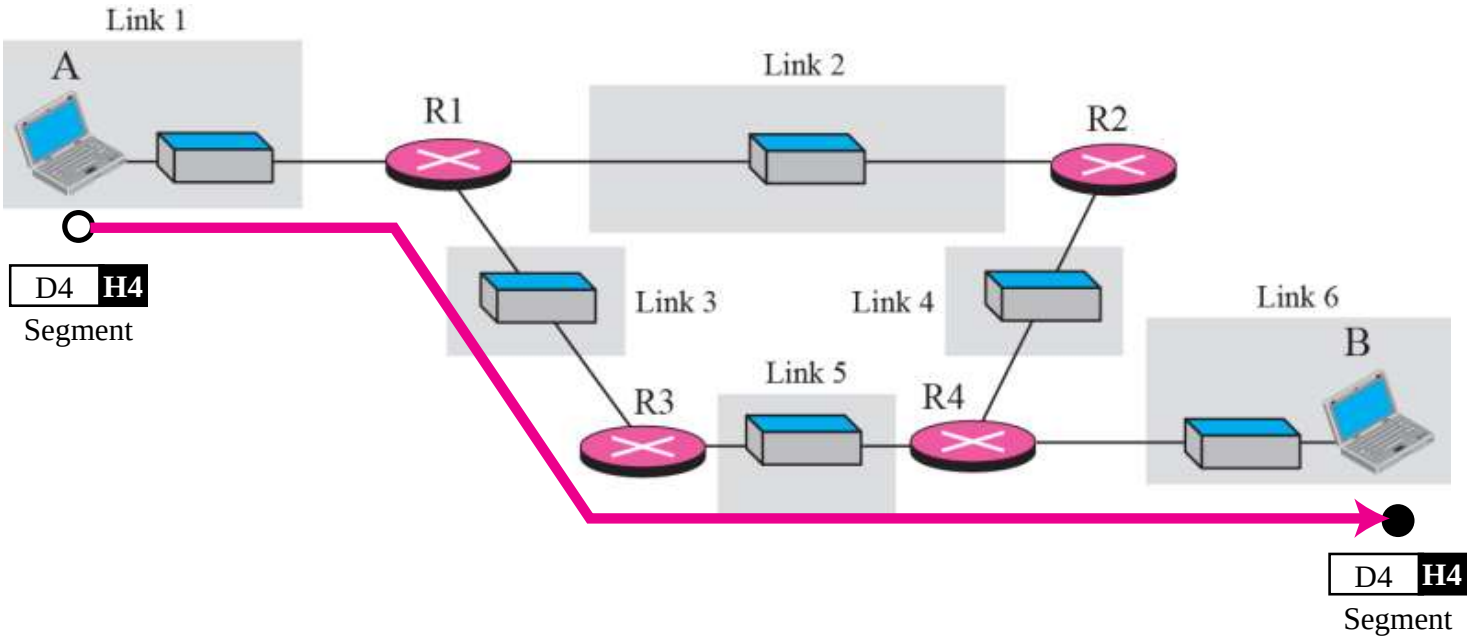

Note

The unit of communication at the transport layer is a segment, user datagram, or a packet, depending on the specific protocol used in this layer.

Figure 2.14 *Communication at application layer*

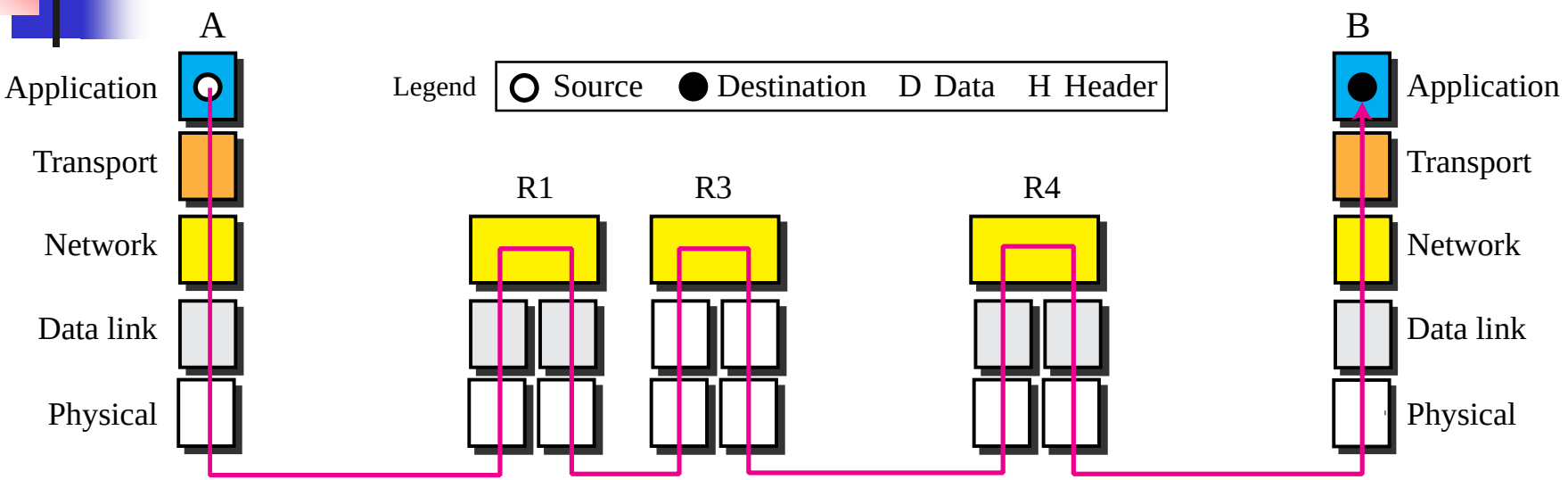

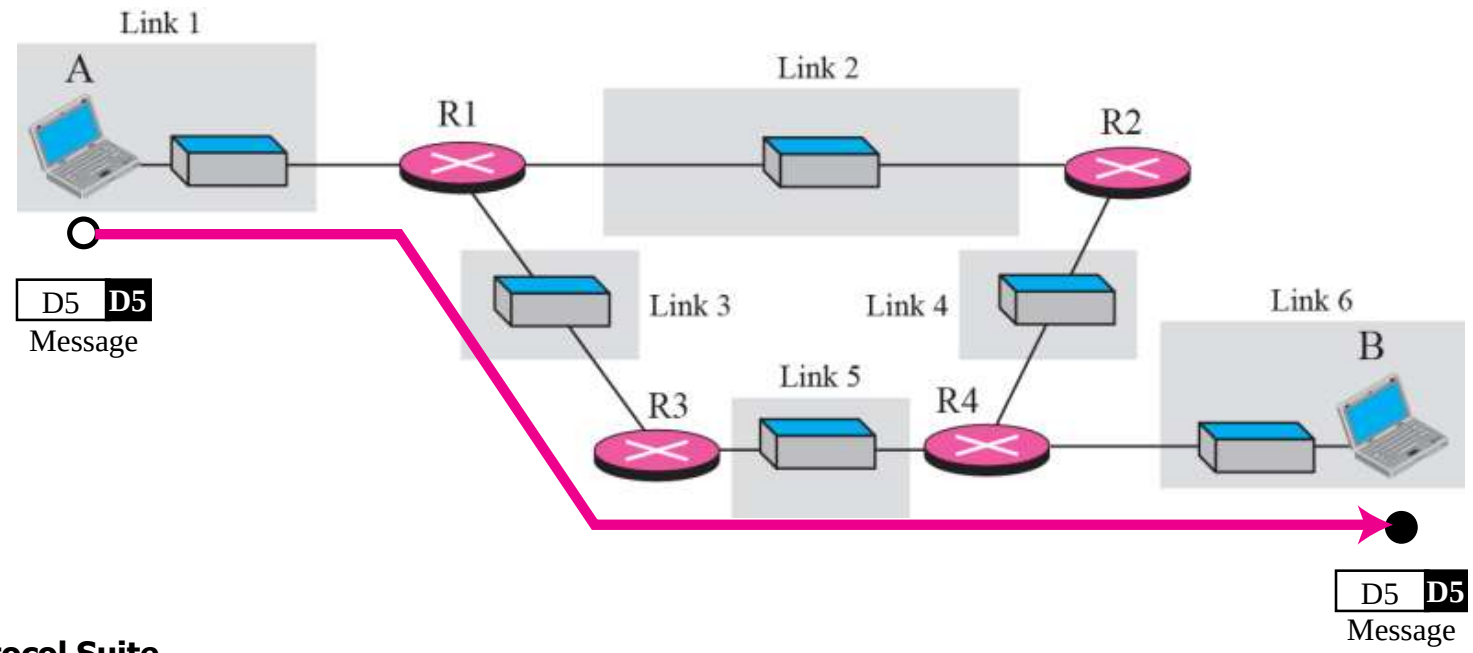

Note

The unit of communication at the application layer is a message.

2-4 ADDRESSING

Four levels of addresses are used in an internet employing the TCP/IP protocols: physical address, logical address, port address, and application-specific address. Each address is related to a one layer in the TCP/IP architecture, as shown in Figure 2.15.

Topics Discussed in the Section

- ✓ **Physical Addresses**
- ✓ **Logical Addresses**
- ✓ **Port Addresses**
- ✓ **Application-Specific Addresses**

Figure 2.15 *Addresses in the TCP/IP protocol suite*

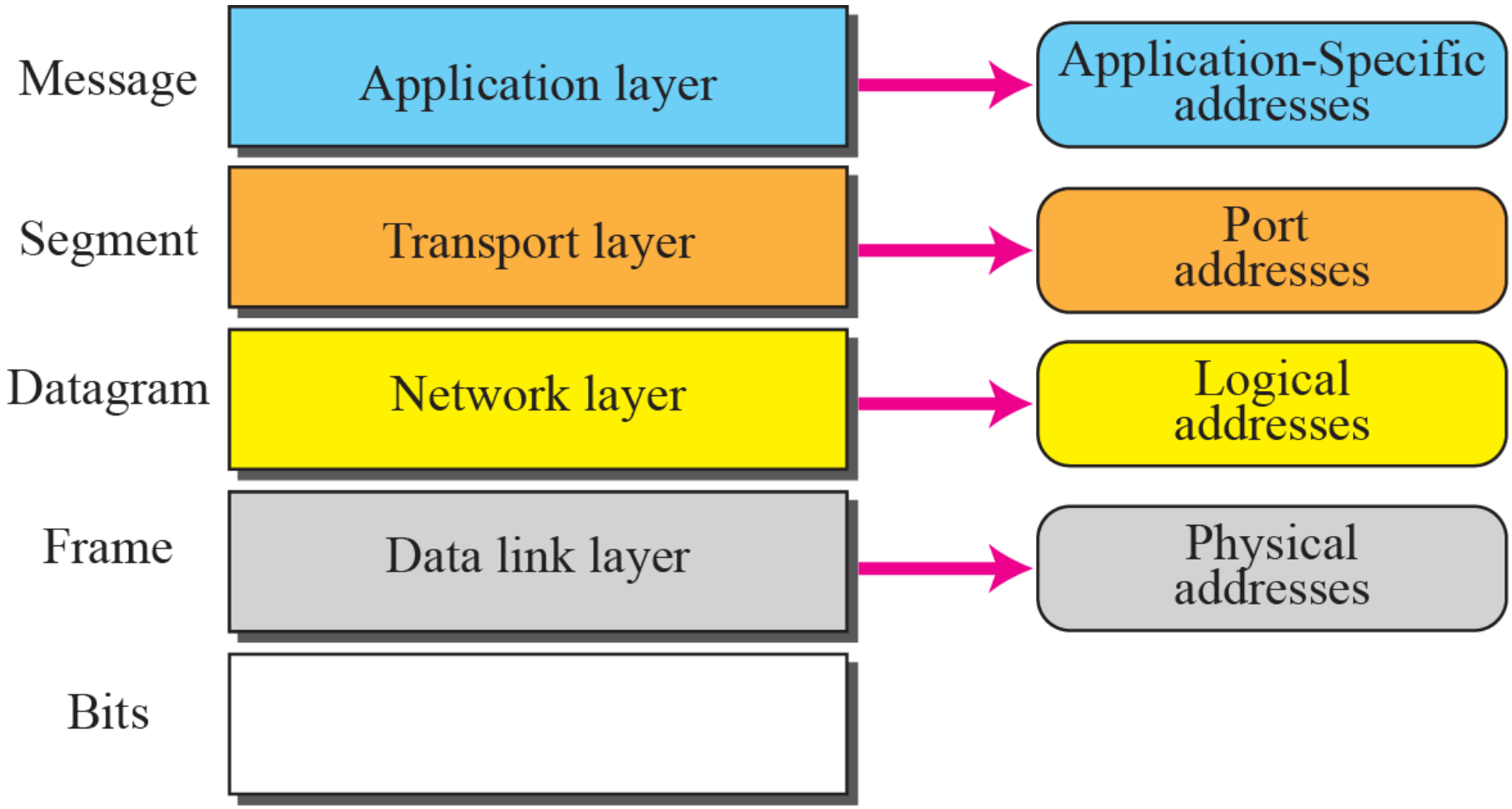

Example 2.3

In Figure 2.16 a node with physical address 10 sends a frame to a node with physical address 87. The two nodes are connected by a link (a LAN). At the data link layer, this frame contains physical (link) addresses in the header. These are the only addresses needed. The rest of the header contains other information needed at this level. As the figure shows, the computer with physical address 10 is the sender, and the computer with physical address 87 is the receiver. The data link layer at the sender receives data from an upper layer. It encapsulates the data in a frame. The frame is propagated through the LAN. Each station with a physical address other than 87 drops the frame because the destination address in the frame does not match its own physical address. The intended destination computer, however, finds a match between the destination address in the frame and its own physical address.

Figure 2.16 *Example 2.3: physical addresses*

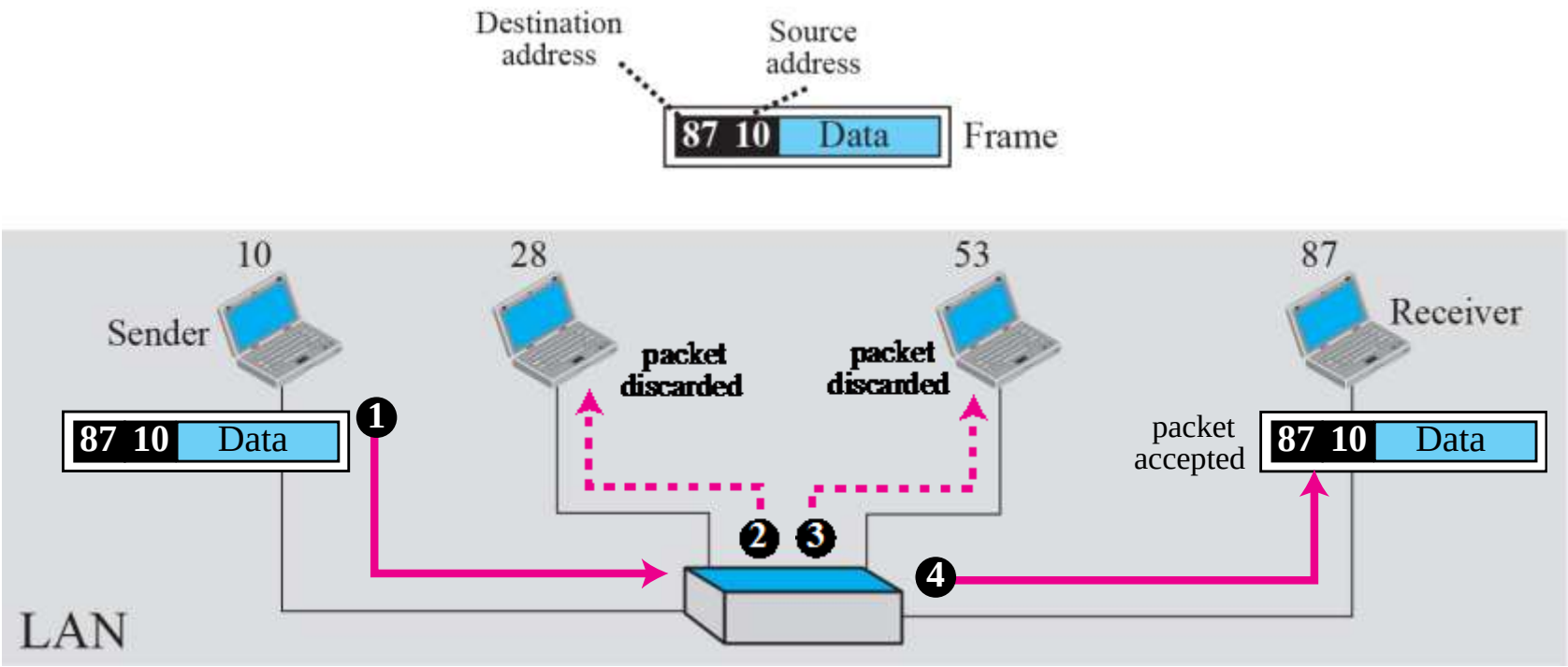

Example 2.4

As we will see in Chapter 3, most local area networks use a 48-bit (6-byte) physical address written as 12 hexadecimal digits; every byte (2 hexadecimal digits) is separated by a colon, as shown below:

07:01:02:01:2C:4B

A 6-byte (12 hexadecimal digits) physical address

Example 2.5

Figure 2.17 shows a part of an internet with two routers connecting three LANs. Each device (computer or router) has a pair of addresses (logical and physical) for each connection. In this case, each computer is connected to only one link and therefore has only one pair of addresses. Each router, however, is connected to three networks. So each router has three pairs of addresses, one for each connection. Although it may be obvious that each router must have a separate physical address for each connection, it may not be obvious why it needs a logical address for each connection. We discuss these issues in Chapters 11 and 12 when we discuss routing. The computer with logical address A and physical address 10 needs to send a packet to the computer with logical address P and physical address 95. We use letters to show the logical addresses and numbers for physical addresses, but note that both are actually numbers, as we will see in later chapters.

Figure 2.17 *Example 2.5: logical addresses*

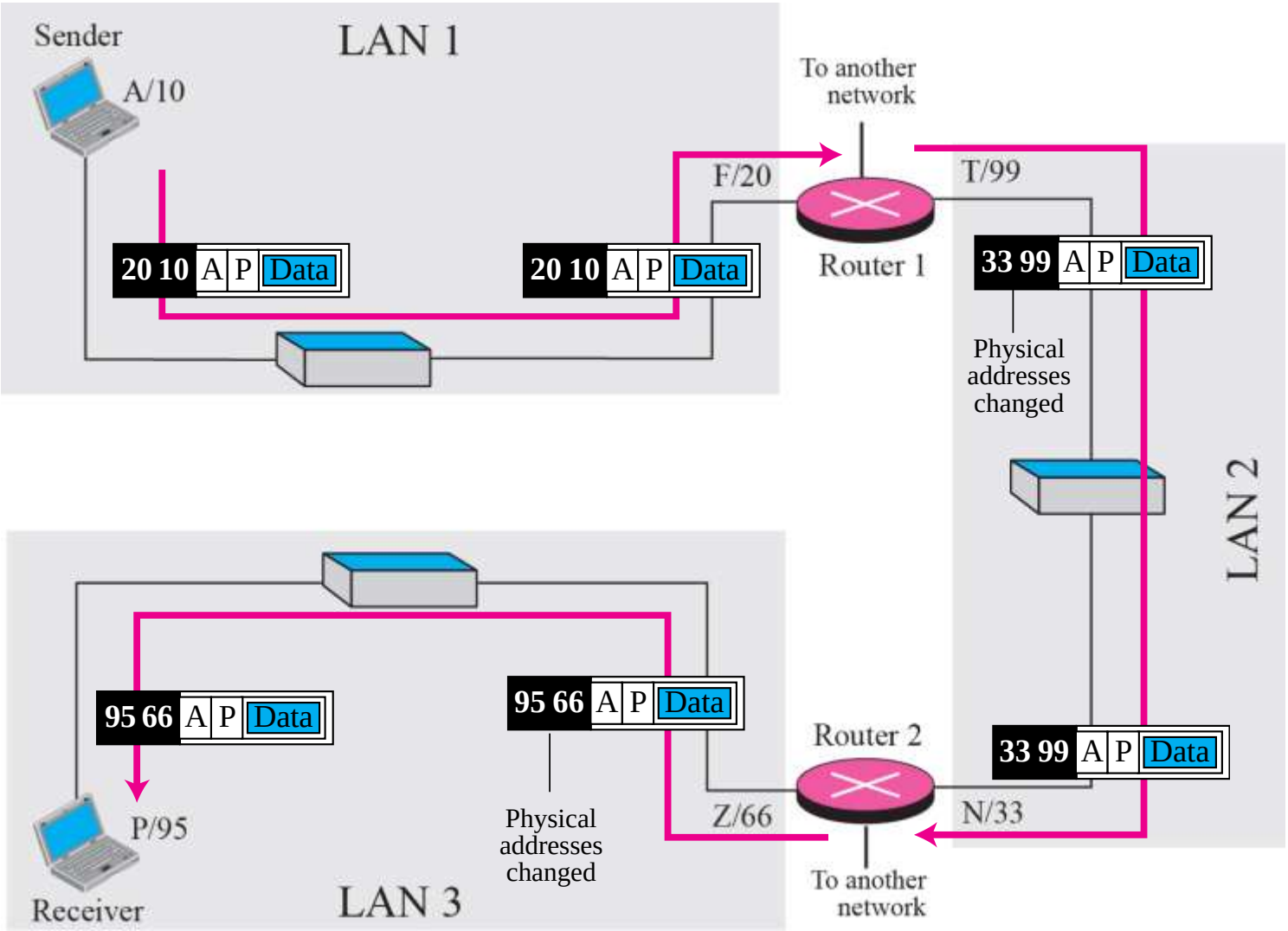

Note

The physical addresses will change from hop to hop, but the logical addresses remain the same.

Example 2.6

Figure 2.18 shows two computers communicating via the Internet. The sending computer is running three processes at this time with port addresses a, b, and c. The receiving computer is running two processes at this time with port addresses j and k. Process a in the sending computer needs to communicate with process j in the receiving computer. Note that although both computers are using the same application, FTP, for example, the port addresses are different because one is a client program and the other is a server program, as we will see in Chapter 17.

Figure 2.18 *Example 2.6: port numbers*

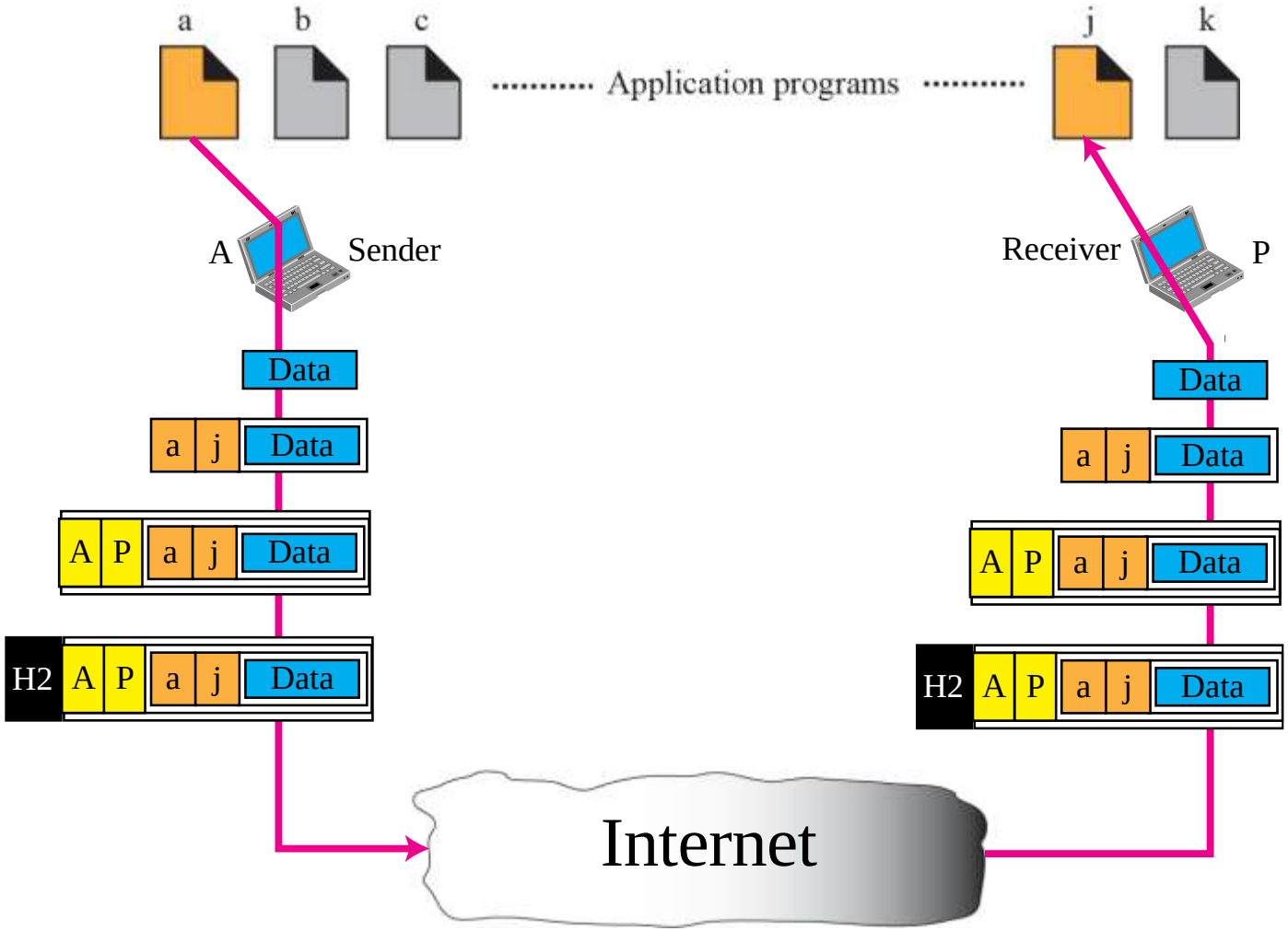

Note

The physical addresses change from hop to hop, but the logical and port addresses usually remain the same.

Example 2.7

As we will see in future chapters, a port address is a 16-bit address represented by one decimal number as shown.

753

A 16-bit port address represented as one single number