Some important questions and answers

What do you mean by replay attacks?

Replay attack means the duplicity of the same message. TCP maintains a sequence number beside the timestamp. While timestamp just maintains whether the allocated time for a particular message has been finished, the sequence number works against reply attacks as follows-

- Let, a sender sends a finished message to a receiver.
- Somehow, the finished message F_1 is congested before being received.
- Waiting for a certain time and not getting the acknowledgment form the receiver, the sender again sends F_1.
- This time it is simply received and receiver sends back an acknowledgment.
- Now, if F_1 is again sent to the receiver by some intruders, its sequence number is checked and considered as what is called replay attacks.

WIMAX vs. Wi-Fi(802.16 vs. 802.11)

WiMAX is similar to the wireless standard known as Wi-Fi, but on a much larger scale and at faster speeds. A nomadic version would keep WiMAX-enabled devices connected over large areas, much like today.s cell phones. We can compare it with Wi-Fi based on the following factors.

IEEE Standards:

Wi-Fi is based on IEEE 802.11 standard where as WiMAX is based on IEEE 802.16. However, both are IEEE standards.

Range:

Wi-Fi typically provides local network access for around a few hundred feet with speeds of up to 54 Mbps, a single WiMAX antenna is expected to have a range of up to 40 miles with speeds of 70 Mbps or more. As such, WiMAX can bring the underlying Internet connection needed to service localWi-Fi networks.

Scalability:

Wi-Fi is intended for LAN applications, users scale from one to tens with one subscriber for each CPE device. Fixed channel sizes (20MHz).

WiMAX is designed to efficiently support from one to hundreds of Consumer premises equipments (CPE)s, with unlimited subscribers behind each CPE. Flexible channel sizes from 1.5MHz to 20MHz.

Bit rate:

Wi-Fi works at 2.7 bps/Hz and can peak up to 54 Mbps in 20 MHz channel.

WiMAX works at 5 bps/Hz and can peak up to 100 Mbps in a 20 MHz channel.

Quality of Service:

Wi-Fi does not guarantee any QoS but WiMax will provide your several level of QoS.

As such, WiMAX can bring the underlying Internet connection needed to service local Wi-Fi networks. Wi-Fi does not provide ubiquitous broadband while WiMAX does.

Comparsion Table:

Freature	WiMax (802.16a)	Wi-Fi (802.11b)	Wi-Fi (802.11a/g)
Primary Application	Broadband Wireless Access	Wireless LAN	Wireless LAN
Frequency Band	Licensed/Unlicensed 2 G to 11 GHz	2.4 GHz ISM	2.4 GHz ISM (g) 5 GHz U-NII (a)
Channel Bandwidth	Adjustable 1.25 M to 20 MHz	25 MHz	20 MHz
Half/Full Duplex	Full	Half	Half
Radio Technology	OFDM (256-channels)	Direct Sequence Spread Spectrum	OFDM (64-channels)
Bandwidth Efficiency	<=5 bps/Hz	<=0.44 bps/Hz	<=2.7 bps/Hz
Modulation	BPSK, QPSK, 16-, 64-, 256-QAM	QPSK	BPSK, QPSK, 16-, 64-QAM
FEC	Convolutional Code Reed-Solomon	None	Convolutional Code
Encryption	Mandatory- 3DES Optional- AES	Optional- RC4 (AES in 802.11i)	Optional- RC4 (AES in 802.11i)
Mobility	Mobile WiMax (802.16e)	In development	In development
Mesh	Yes	Vendor Proprietary	Vendor Proprietary
Access Protocol	Request/Grant	CSMA/CA	CSMA/CA

Discuss MAC protocol for wireless LANs

Comparison of MAC Algorithms in infrastructure-based WLAN

Algorithms	Carrier Sensing , RTS / CTS, Polling	NAV (virtual sensing)	DIFS / PIFS / SIFS	Back-off Algorithm	Back-off Timer	With ACK	Centralized
CSMA/CA	Carrier Sensing	No	----	BEB	No	Yes	No
MACA	RTS/CTS	No	----	BEB	No	No	No
MACAW	RTS/CTS	No	----	MILD	No	Yes	No
IEEE 802.11 with CSMA/CA	Carrier Sensing	No	DIFS / SIFS	BEB	Yes	Yes	No
IEEE 802.11 with RTS/CTS	Carrier Sensing & RTS/CTS	Yes	DIFS / SIFS	BEB	Yes	Yes	No
IEEE 802.11 with Polling	Polling	Yes	PIFS / SIFS	-----	-----	Yes	Yes

3.1.1 MAC Algorithms in Infrastructure-based WLAN

Variety of medium access methods and techniques has been designed for WLAN. Many of them have been deployed successfully. New methods are still being proposed in the market. The paper is going to narrate some of the MAC methods which have been implemented successfully for the commercial use.

i. CSMA/CA

The basic CSMA scheme has come up with the concept of *collision avoidance* by using *random back-off time*. So, the CSMA/CA introduces the BEB algorithm in order to create some fairness for waiting time and importantly to reduce the probability of collisions. In the very first cycle, if a station finds the channel free starts its transmission immediately. Consider the scenario in Figure 3.2, the station B gets free medium in first cycle and hence starts transmission. All other stations A, C and D got the busy channel in first cycle, they now select the random back-off time each within a contention window (CW). In the beginning of next cycle, the stations A, C and D want to send data and start sensing the medium. As soon as stations sense the idle medium, they begin to counting their back-off times. The station D had small back-off time, D finishes it very early and gets the free medium and thus starts transmission. But other two stations A and C continued with back-off time, and after finishing their times they got a busy medium. Now A and C will wait for next cycle having new back-off time and repeat the whole algorithm again. Moreover, if two stations finish their back-off times simultaneously, they will start their transmission together provided the medium is idle, and hence there will be a collision. The collision triggers a new value of contention window (double+1). As soon as the receiver gets the packet and it answers with an acknowledgment packet ACK. The ACK confirms the correct reception of data. If no ACK is received by sender, it will retransmit the packet in future. But the sender has to follow the whole algorithm again to access the channel. No special rule has been designed yet for retransmission.

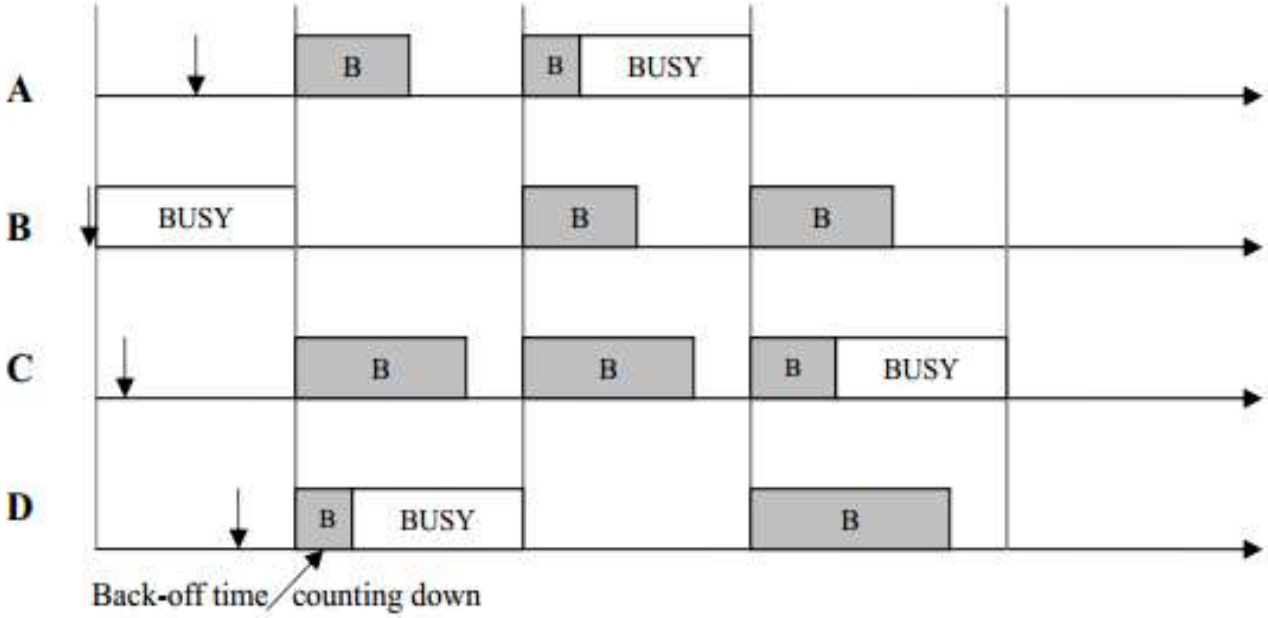

Figure 3.2: Stations accessing the medium using CSMA/CA

Issues: The back-off algorithm in CSMA/CA just tries to avoid collisions, but could not remove it all. Depending on the size of the CW, values of random back-off time either so small that causing many collisions or values may be quite big causing unnecessary delay. Furthermore, there is unfairness in waiting for back-off time. The nodes waiting their whole back-off time and then find the channel is busy, they will select new time for the next cycle which is severe injustice. They are not given any extra credit of previously waiting time. Secondly, CSMA/CA has failed to solve the hidden and exposed terminal problems. In wireless network it is obvious that some stations are out of the transmission and detection range of each other. It is possible that transmission and detection range of A is reaching to B, but not to C. Same is the case with the C. That means A and C are hidden to each other. Therefore, when A gets the medium free and transmits data to B, the C cannot detect that the medium is busy and it can also transmit data to B at the same time. Hence, there will be a collision. The exposed terminal problem also exists here as we have already discussed these problems in section 2.3.

ii. MACA

In order to overcome the hidden and exposed terminal problems in CSMA/CA, the new technique *multiple access with collision avoidance* (MACA) was introduced in many MAC layer protocols of WLAN. It uses two additional packets Request-to-Send (RTS) and Clear-to-Send (CTS). The RTS/CTS are the control packets exchanged between two nodes just before the transmission of actual data. The binary exponential back-off (BEB) algorithm is also applied to provide fairness while accessing the medium.

When a sender wants to send the data and finds the medium free, it first sends an RTS packet to the receiver (after waiting for back-off time if the medium was found busy in previous cycle). RTS indicates that sender wants to send a data. The RTS packet is not given any higher priority as compared to other data packets. It possesses the size of data indicating the duration of whole data transmission. After receiving the RTS, the receiver responds with the CTS packet, provided that the receiver is willing to accept the data at the moment. Otherwise CTS is not responded to the sender. The CTS packet gives the permission to the sender that it can transmit data to the intended receiver. Now the sender transmits the actual data safely to the required receiver. The CTS packet also contains the length of data transmission. All other stations hearing RTS or CTS come to know that particular stations are busy and hence they avoid interfere that transmission. Any node overhears an RTS packet it defers its transmission until corresponding CTS packet is expected to be received. A node overhearing a CTS packet defers its transmission till the end of corresponding data transmission. All these steps are clearly shown in the Figure 3.3. Thus, the mechanism relieves the problem of hidden and exposed terminals by successfully exchange of RTS-CTS-DATA packets. There is no acknowledgment packet (ACK) in MACA scheme.

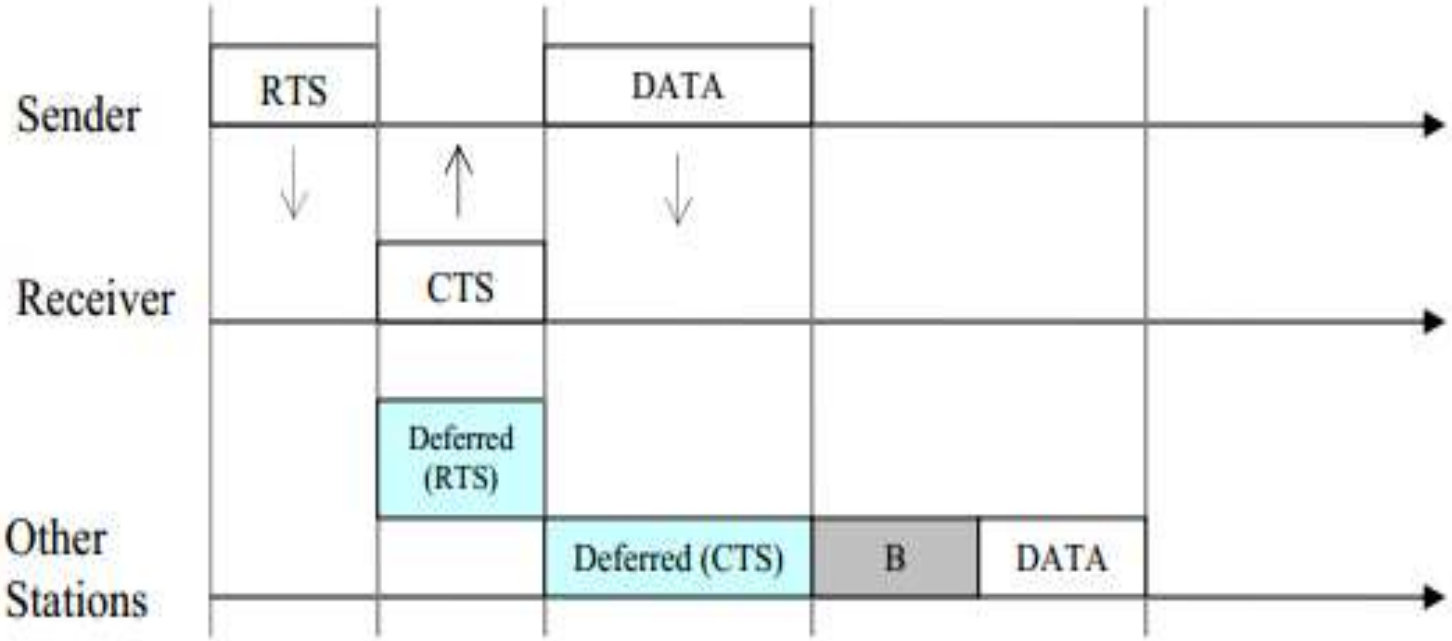

Figure 3.3: Stations accessing the medium using MACA

Issues: There is a use of extra packets RTS/CTS, which are overhead and load in the network. They are likely to cause delay in communication. Moreover, the scheme does not completely eliminate the problem of hidden and exposed terminal exists in CSMA/CA. The two RTS packets can collide themselves transmitted simultaneously by two adjacent nodes. CTS packet can also collide with the RTS of the neighbor.

iii. MACAW

The improved and modified version of MACA was renamed as *MACA for Wireless* (MACAW). It follows basically the same RTS/CTS scheme of MACA.

The first improvement is the addition of acknowledgment (ACK) packet after each successful data frame. It improves the reliability as well as system throughput. Secondly, it uses *multiplicative increase and linear decrease* (MILD) as a back-off algorithm instead of BEB. Another different approach of MACAW is an additional Data-Sending (DS) packet to be sent by a node before transmission of actual DATA packet. The DS packet informs the overhearing stations that RTS-CTS exchange has been successful and data transmission is about to begin. The overhearing stations defer all their transmissions till the Data and ACK packets have to be exchanged. Figure 3.4 is a model of MACAW method. Besides all, it also adds the Request-for-Request-to-Send (RRTS) packet. A node receiving the RTS packet may not be able to reply with its CTS packet if it is busy with another transmission. That increases the back-off counter of the sender. To avoid the problem if a receiver of RTS cannot reply with CTS packet immediately (being busy with another transmission), it transmits RRTS packet to the sender as soon as it becomes free. As a result, sender will transmit RTS packet as early as possible [5]. Hence, RTS-CTS-DATA-ACK packets exchanged while transmission of data with help of DS and RRTS packets as well. MACAW improves the throughput and fairness in WLAN.

Issues: It has same issues of using control packets RTS/CTS with now even more packets of ACK, DS and RRTS are used in the network that increase the overhead and the load of traffic. And, the problem of collision between these packets still exists. Furthermore, MACAW does not distinguish between different priority classes. All nodes

have equal right to access the channel and there is no distinction among different types of traffic.

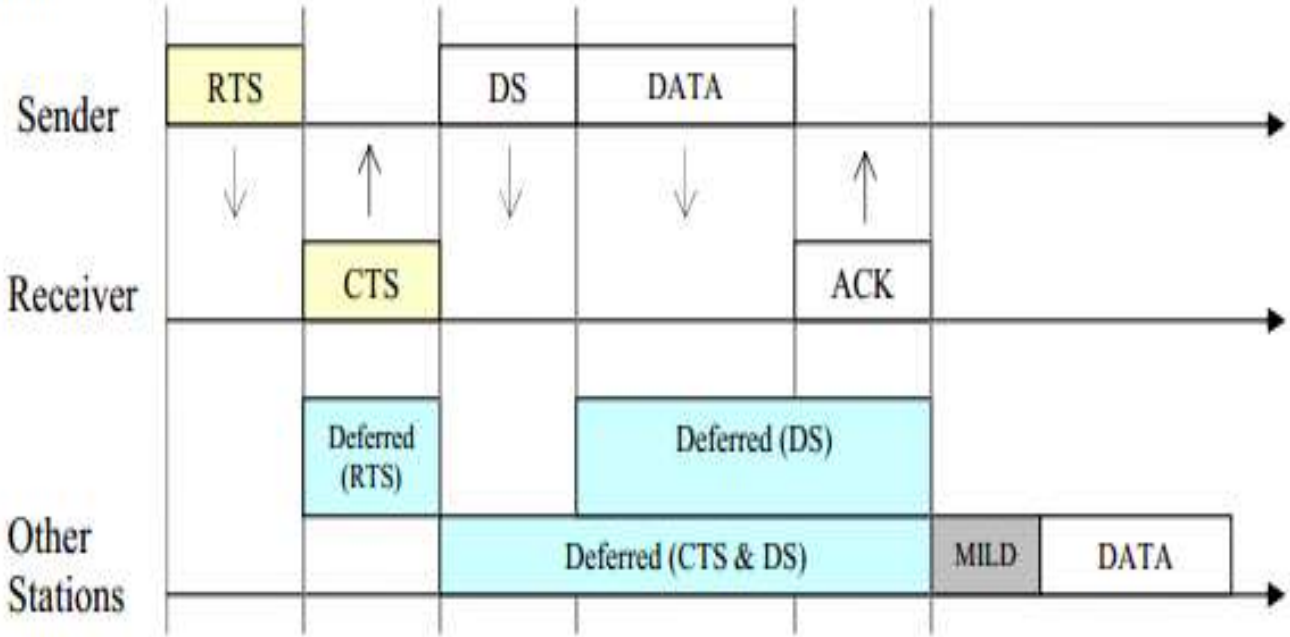

Figure 3.4: Stations accessing the medium using MACAW

iv. IEEE 802.11 MAC

The IEEE works here as well by introducing IEEE standard 802.11 for WLAN. The standard's number indicating that it belongs to the group of 802.x LAN standards, e.g., 802.3 for Ethernet and 802.5 for Token Ring etc. Therefore, this standard IEEE 802.11 focuses only on physical (PHY) and medium access control (MAC) layers. Basically MAC layer provides the mandatory asynchronous data service and an optional time-bounded service. The 802.11 MAC offers both types of services for infrastructure-based WLAN, while it offers only asynchronous data service for ad-hoc network mode.

The three different access mechanisms have been defined for IEEE 802.11 MAC; first one is based on CSMA/CA, second is on MACA/MACAW, and the last one is the Polling method. The first two methods can also be categorized as *distributed coordination function* (DCF), it offers only asynchronous data service. The third method can be called *point coordination function* (PCF) and it offers both asynchronous and time-bounded service. The IEEE 802.11 MAC schemes are also called *distributed foundation wireless medium access control* (DFWMAC) [1].

The unique feature of 802.11 MAC is the fix parameters for waiting time before accessing the medium. This waiting time is other than the back-off time. There are three different types of parameters. They define the priorities of medium access.

- **DCF inter-frame spacing (DIFS)**: Any node in the network if finds the medium free for the transmission, it has to wait first for duration of DIFS. This parameter has longest waiting time and has lowest priority of medium access.

- **Short inter-frame spacing (SIFS)**: It is the shortest waiting time for medium access, and used before sending the ACK or polling responses. It has highest priority being shortest waiting time.

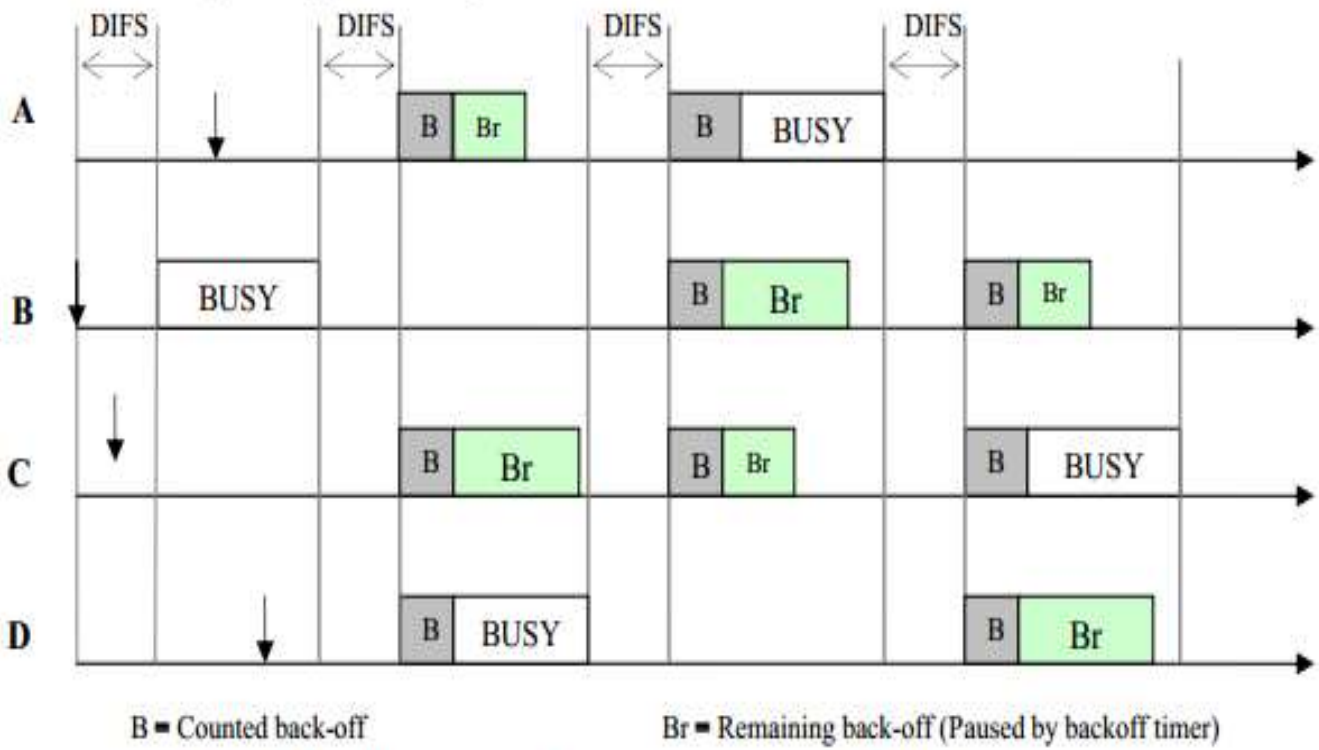

Figure 3.5: Stations accessing the medium using IEEE 802.11 MAC

3.1.2 Comparison of MAC Algorithms

To conclude the discussion of above described MAC schemes, a brief comparison is to be narrated. Table 3.1 is also highlighting the text. Starting with **CSMA/CA** as it is basic carrier sensing scheme using random back-off algorithm. The standard **IEEE 802.11** is also using this scheme but with addition of DIFS, SIFS and back-off timer. Both of them have failed to solve the hidden and exposed terminal problems.

The **MACA** is based on control packets RTS/CTS. There is no ACK in the method. In MACA, a node overhears an RTS packet it only defers its transmission until corresponding CTS packet is to be received instead of deferring until the end of data transmission. A node overhearing a CTS packet defers its transmission till the end of corresponding data transmission. This is the big difference with **IEEE 802.11 MAC** with RTS/CTS extension. In this standard, any station overhears an RTS or CTS packet, will set an NAV to defer itself from medium access till the end of data transmission and corresponding ACK frame to be received. **MACAW** is modified by adding ACK, Data-

Table 3.2: Comparison of ***OA*** MAC Algorithms in Ad-Hoc Networks

Algorithms	Carrier Sensing	RTS/CTS	Increased RTS/CTS Transmission time	Back-off Algorithm	Busy Tone based	Split channel
CSMA/CA	Yes	No	No	BEB	No	No
MACA / MACAW	No	Yes	No	BEB / MILD	No	No
FAMA	Yes	Yes	Yes	BEB	No	No
DBTMA	No	Yes	No	MILD	Yes	Yes
IEEE 802.11 MAC	Yes	Yes	No	BEB	No	No

CSU/DSU

A CSU/DSU (Channel Service Unit/Data Service Unit) is a hardware device about the size of an external modem that converts a digital data frame from the communications technology used on a local area network (LAN) into a frame appropriate to a wide-area network (WAN) and vice versa. For example, if you have a Web business from your own home and have leased a digital line (perhaps a T-1 or fractional T-1 line) to a phone company or a gatewayat an Internet service provider, you have a CSU/DSU at your end and the phone company orgateway host has a CSU/DSU at its end.

The Channel Service Unit (CSU) receives and transmits signals from and to the WAN line and provides a barrier for electrical interference from either side of the unit. The CSU can also echo loopback signals from the phone company for testing purposes. The Data Service Unit (DSU) manages line control, and converts input and output between RS-232C, RS-449, orV.xx frames from the LAN and the time-division multiplexed (TDM) DSX frames on the T-1 line. The DSU manages timing errors and signal regeneration. The DSU provides a modem-like interface between the computer as Data Terminal Equipment (DTE) and the CSU.

Wireless **access points** (APs or WAPs) are specially configured devices on wireless local area networks (WLANs). Access points act as a central transmitter and receiver of wireless radio signals including Wi-Fi. APs are most commonly used to support public Internet hotspots and also on internal business networks to extend their Wi-Fi signal range.

An intelligent switch is a high-level storage area network (SAN) routing switch that provides features such as storage virtualization, quality of service (QoS), remote mirroring, data sharing, protocol conversion, and advanced security. Intelligent switches are an important part of storage area management (SAM), a methodology that is gaining in importance as networks become increasingly complex and expensive to deploy, operate, and maintain.

Router Vs Switch

Router	Switch
Basically, a router is used to connect computers belonging to one network with those belonging to another or other networks. Thus, a router connects two or more different networks.	A switch on the other hand, connects different computers within one network.
As per the OSI model, a router is a Network Layer device, i.e. it operates at Layer 3.	Unless it is a multi-layer switch, a network switch operates at Layer 2 (Data Link Layer).
Routers are much more sophisticated and intelligent network devices, as compared to switches.	In comparison with routers, switches are less sophisticated and less intelligent.
A router works on the principle of IP addresses.	A switch works on the basis of MAC addresses.
A router's inbuilt hardware makes use of routing algorithms to compute the best possible path for routing data packets across different computer networks.	A switch does not perform any such activities.
Routers have their own inbuilt operating systems and they need to be configured before use.	Most switches do not require any prior configuration and are usually 'ready-to-use'.

Switch Vs Hub

Switch	Hub
As per the OSI model, network switches are classified as Data Link Layer devices, i.e. they operate at Layer 2. However, certain multi-layer switches can operate at higher layers as well.	As per the OSI model, a hub is a Physical Layer device, i.e. it operates at Layer 1.
A switch is a more sophisticated network device and is more expensive than a hub.	A hub is a very primitive device and is comparatively much cheaper.
A switch is an intelligent device, it transmits the data packets from the source computer to *only* those network computers to which the data packets are originally intended.	A hub is a 'dumb' device to say the least. It broadcasts the data packets to each and every networked computer, and not just the target computer or set of computers to which the data packets were originally intended to be sent.
There is optimum utilization of network bandwidth in case of switches, and bandwidth wastage is minimal.	Due to their broadcast mechanism of data transmission, there is unnecessary wastage of network bandwidth which results in slow operation and data transfer speeds.
Switches are full-duplex devices, i.e. both, data transmission and reception can take place simultaneously.	Hubs are half-duplex devices, i.e. both, data transmission and reception cannot take place simultaneously.
Network security is much better with the use of a switch, as compared to a hub.	Thanks to its broadcast mechanism, network security becomes a big issue and a loophole in the case of a hub.

What is difference between topology and protocol?

Network topology is the physical design of a LAN which resolves the conflict that occurs between computers on the network attempting to transmit at the same time. Whereas protocols are the standards used by networks to permit communication between network-connected devices.

Difference between Physical and Logical Topology?

The difference between physical topology and logical topology is in perspective. A logical topology is how devices appear connected to the user. A physical topology is how the devices are actually interconnected with wires and cables.

What Is the Function of a Network Interface Card?

The function of the network interface card or NIC controller is to provide a physical connection between a PC and a network. A typical setup in an office environment is a NIC card placed inside a PC with a cable running from the NIC card, eventually being connected to the company network or intranet.

What is the difference between passive star and active repeater in fiber network?

passive star has no electronics. The light from one fiber illuminates a number of others. An active repeater converts the optical signal to an electri- cal one for further processing.

What is the difference between Store-and-Forward switching and Cut-Through switching?

Store-and-Forward: Store-and-Forward switchingwill wait until the entire frame has arrived prior to forwardingit. This method stores the entire frame in memory. Once the frameis in memory, the switch checksthe destination address, sourceaddress, and the CRC. If no errors are present, the frame isforwarded to the appropriate port. This process ensures that thedestination network is not affected by corrupted or truncatedframes.

Cut-Through: Cut-Through switching will beginforwarding the frame as soon as the destination address isidentified. The difference between this and Store-and-Forward isthat Store-and-Forward receives the whole frame before forwarding.Since frame errors cannot be detected by reading only thedestination address, Cut-Through may impact network performance byforwarding corrupted or truncated frames. These bad frames cancreate broadcast storms wherein several devices on the networkrespond to the corrupted frames simultaneously.

Fragment-Free Switching

Fragment-free (runtless switching) switching is an advanced form of cut-through switching. The switches operating in cut-through switching read only up to the destination MAC address field in the Ethernet frame before making a switching decision. The switches operating in fragment-free switching read at least 64 bytes of the Ethernet frame before switching it to avoid forwardingEthernet runt frames (Ethernet frames smaller than 64 bytes).

Difference Symmetric and asymmetric switching

LAN switching may be classified as symmetric or asymmetric based on the way in which bandwidth is allocated to the switch ports. A symmetric switch provides switched connections between ports with the same bandwidth. An asymmetric LAN switch provides switched connections between ports of unlike bandwidth, such as a combination of 10-Mbps and 100-Mbps ports.

Asymmetric switching enables more bandwidth to be dedicated to the server switch port in order to prevent a bottleneck. This allows smoother traffic flows where multiple clients are communicating with a server at the same time. Memory buffering is required on an asymmetric switch. The use of buffers keeps the frames contiguous between different data rate ports.

The next page will discuss memory buffers.

How Port Numbers Work

In computer networking, a *port number* is part of the addressing information used to identify the senders and receivers of messages. Port numbers are most commonly used withTCP/IP connections. Home network routers and computer software work with ports and sometimes allow you to configure port number settings. These port numbers allow different applications on the same computer to share network resources simultaneously.

Port numbers work like telephone extensions. Just as a business telephone switchboard can use a main phone number and assign each employee an extension number (like x100, x101, etc.), so a computer has a main address and a set of port numbers to handle incoming and outgoing connections.

In both TCP and UDP, port numbers start at 0 and go up to 65535. Numbers in the lower ranges are dedicated to common Internet protocols (like 21 forFTP and 80 for HTTP).

Routed vs. Routing Protocols

A **routing** protocol sends and receives routing information packets to and from other routers.
A **routed** protocol can be routed by a router, which means that it can be forwarded from one router to another.
A **routed** protocol contains the data elements required for a packet to be sent outside of its host netowkr or network segment. In other words, a routed protocol can be routed.
Protocols used to communicate routing information between routers within an autonomous system are Interior Gateway Protocols (IGP), which are routing protocols, but not routed protocols.
Examples of **routed** protocols are IP and IPX, and examples of **routing** protocfols are RIP and IGRP.

- Static vs. Dynamic Routing -

Static vs. Dynamic Routing

There are two basic methods of building a routing table:

- **Static Routing**
- **Dynamic Routing**

A **static** routing table is created, maintained, and updated by a network administrator, *manually*. A static route to *every* network must be configured on *every* router for full connectivity. This provides a granular level of control over routing, but quickly becomes impractical on large networks.

Routers will *not* share static routes with each other, thus reducing CPU/RAM overhead and saving bandwidth. However, static routing is *not fault-tolerant*, as any change to the routing infrastructure (such as a link going down, or a new network added) requires manual intervention. Routers operating in a purely static environment cannot seamlessly choose a better route if a link becomes unavailable.

A **dynamic** routing table is created, maintained, and updated by a *routing protocol* running on the router. Examples of routing protocols include **RIP** (Routing Information Protocol), **EIGRP** (Enhanced Interior Gateway Routing Protocol), and **OSPF** (Open Shortest Path First). Specific dynamic routing protocols are covered in great detail in other guides.

Routers *do* share dynamic routing information with each other, which increases CPU, RAM, and bandwidth usage. However, routing protocols are capable of dynamically choosing a different (or better) path when there is a change to the routing infrastructure.

Do not confuse *routing* protocols with *routed* protocols:

- A ***routed*** protocol is a Layer 3 protocol that applies logical addresses to devices and routes data between networks (such as IP)
- A ***routing*** protocol dynamically builds the network, topology, and next hop information in routing tables (such as RIP, EIGRP, etc.)

The following briefly outlines the advantages and disadvantages of *static* routing:

Advantages of Static Routing

- Minimal CPU/Memory overhead
- No bandwidth overhead (updates are not shared between routers)
- Granular control on how traffic is routed

Disadvantages of Static Routing

- Infrastructure changes must be manually adjusted
- No "dynamic" fault tolerance if a link goes down
- Impractical on large network

The following briefly outlines the advantages and disadvantages of *dynamic* routing:

Advantages of Dynamic Routing

- Simpler to configure on larger networks
- Will dynamically choose a different (or better) route if a link goes down
- Ability to load balance between multiple links

Disadvantages of Dynamic Routing

- Updates are shared between routers, thus consuming bandwidth
- Routing protocols put additional load on router CPU/RAM
- The choice of the "best route" is in the hands of the routing protocol, and not the network administrator

A **default route** of a computer that is participating in computer networking is the packet forwarding rule (route) taking effect when no other route can be determined for a given Internet Protocol (IP) destination address. All packets for destinations not established in the routing table are sent via the default route. This route generally points to another router, which treats the packet the same way: If a route matches, the packet is forwarded accordingly, otherwise the packet is forwarded to the default route of that router. The process repeats until a packet is delivered to the destination. Each router traversal counts as one hop in the distance calculation for the transmission path.

Subnetting vs Supernetting

Subnetting is the process of dividing an IP network in to sub divisions called subnets. Computers belonging to a sub network have a common group of most-significant bits in their IP addresses. So, this would break the IP address in to two parts (logically), as the network prefix and the rest field. **Supernetting** is the process of combining several sub networks, which have a common Classless Inter-Domain Routing (CIDR) routing prefix. Suppernetting is also called route aggregation or route summarization.

What is Subnetting?

Process of dividing an IP network in to sub divisions is called subnetting. Subnetting divides an IP address in to two parts as the network (or routing prefix) and the rest field (which is used to identify a specific host). CIDR notation is used to write a routing prefix. This notation uses a slash (/) to separate the network starting address and the length of the network prefix (in bits). For example, in IPv4, 192.60.128.0/22 indicates that 22 bits are allocated for the network prefix and the remaining 10 bits are reserved for the host address. In addition, routing prefix can also be represented using the subnet mask. 255.255.252.0 (11111111.11111111.11111100.00000000) is the subnet mask for 192.60.128.0/22. Separating the network portion and the subnet portion of an IP address is done by performing a bitwise AND operation between the IP address and the subnet mask. This would result in identifying the network prefix and the host identifier.

What is Supernetting?

Supernetting is the process of combining several IP networks with a common network prefix. Supernetting was introduced as a solution to the problem of increasing size in routing tables. Supernetting also simplifies the routing process. For example, the subnetworks 192.60.2.0/24 and 192.60.3.0/24 can be combined in to the supernetwork denoted by 192.60.2.0/23. In the supernet, the first 23 bits are the network part of the address and the other 9 bits are used as the host identifier. So, one address will represent several small networks and this would reduce the number of entries that should be included in the routing table. Typically, supernetting is used for class C IP addresses (addresses beginning with 192 to 223 in decimal), and most of the routing protocols support supernetting. Examples of such protocols are Border Gateway Protocol (BGP) and Open Shortest Path First (OSPF). But, protocols such as Exterior Gateway Protocol (EGP) and the Routing Information Protocol (RIP) do not support supernetting.

IPv6 Features

The features of IPv6 are listed below.

- **New Packet Format and Header:** IPv6 specifies a new packet format. The new **IPv6 packet format** helps to minimize packet header processing by routers. This is achieved by moving both nonessential and optional fields to extension headers that are placed after the IPv6 header. Since **IPv4 packets** and IPv6 packets are significantly different, the two protocols are not interoperable.

- **Large Address Space:** IPv4 has 32 bit (4-byte) address space, but IPv6 has 128-bit (16-byte) address space. The very large IPv6 address space supports a total of 2^{128} (3.4×10^{38}) addresses. This large address space allow a better, systematic, hierarchical allocation of addresses and efficient route aggregation. With the large number of available addresses we can eliminate address-conservation techniques like **NAT (Network Address Translation)**.

- **Statefull and Stateless IPv6 address configuration:** In IPv6 statefull or stateless configuration is possible. Hosts on a link can automatically configure with IPv6 addresses called **link-local addresses** and with addresses derived from prefixes advertised by local routers. When first connected to a network, a host sends a link-local router solicitation multicast request for its configuration parameters. The router which is available in the link responds to the request from the host with a router advertisement packet that contains network-layer configuration parameters. Hosts can configure **link-local addresses** automatically and communicate each other without manual configuration even there is no router available. The hosts may also have stateful configuration with the Dynamic Host Configuration Protocol version 6 (DHCPv6) or static configurations, as IPv4.

- **Multicast:** The three types of communication available in in IPv4 are **unicast, multicast and broadcast**. **Unicast** is one-to-one communication; **multicast** is one-to-many communication and **broadcast** is one-to-all communication. The transmission of a packet to all hosts was performed by using special broadcast addresses in IPv4. **Broadcast** communication is not available in IPv6 and therefore does not define **broadcast addresses**. In IPv6, the effect of broadcast can be achieved by sending a packet to the link-local all nodes multicast group at address ff02::1.

- **Integrated Internet Protocol Security (IPSec):** **Internet Protocol Security (IPSec)** is a set of Internet standards that uses cryptographic security services to provide Confidentiality, Authentication, Data integrity. The support for **Internet Protocol Security (IPSec)** was optional in **IPv4**. **Internet Protocol Security (IPSec)** is an integral part of the base protocol suite in IPv6. **Internet Protocol Security (IPSec)** support is mandatory in IPv6.

- **Neighbor Discovery Protocol:** The Neighbor Discovery Protocol (NDP) is a protocol available IPv6. The Neighbor Discovery protocol (NDP) is based on Internet Control Message Protocol Version 6 (ICMPv6) messages that manage the interaction nodes on the same link. There is no **Address Resolution Protocol (ARP)** for IPv6 and the role of the **Address Resolution Protocol (ARP)** is replaced by Neighbor Discovery Protocol (NDP).

- **Extensibility:** The features of IPv6 can be extended by adding extension headers after **IPv6 header**. The size IPv6 extension headers is constrained only by the size of the **IPv6 datagram packet**, unlike 40 bytes of options of **IPv4**.

- **Jumbograms:** Jumbograms is an optional feature of IPv6. Jumbograms allow packets with payloads 2^32 - 1 (4,294,967,295) bytes by making use of a 32-bit length field.

Fragmentation

- Different networks have different maximum packet sizes, and solution is to allow gateway to split a packet into smaller ones → **fragmentation**

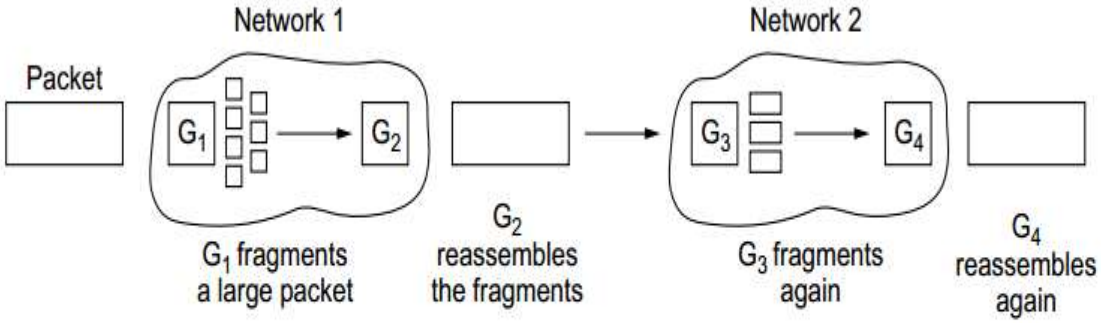

(a)

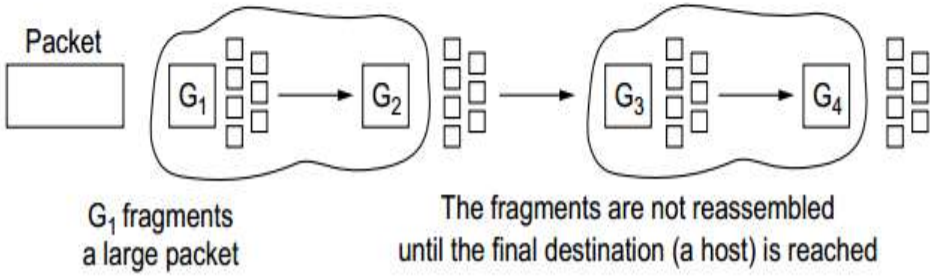

(b)

(b)

- **Transparent fragmentation**: "small-packet" network splits packet and recombines fragments back. Others do not need to know
- **Nontransparent fragmentation**: destination host recombines fragments back

Fragmentation → Reassembly

- A fragment may be fragmented again by successive intermediate networks → when a fragment arrives at destination, we have to know exactly where it fits into original packet
- **Solution**: requires two sequence fields in header, original packet number and fragment number

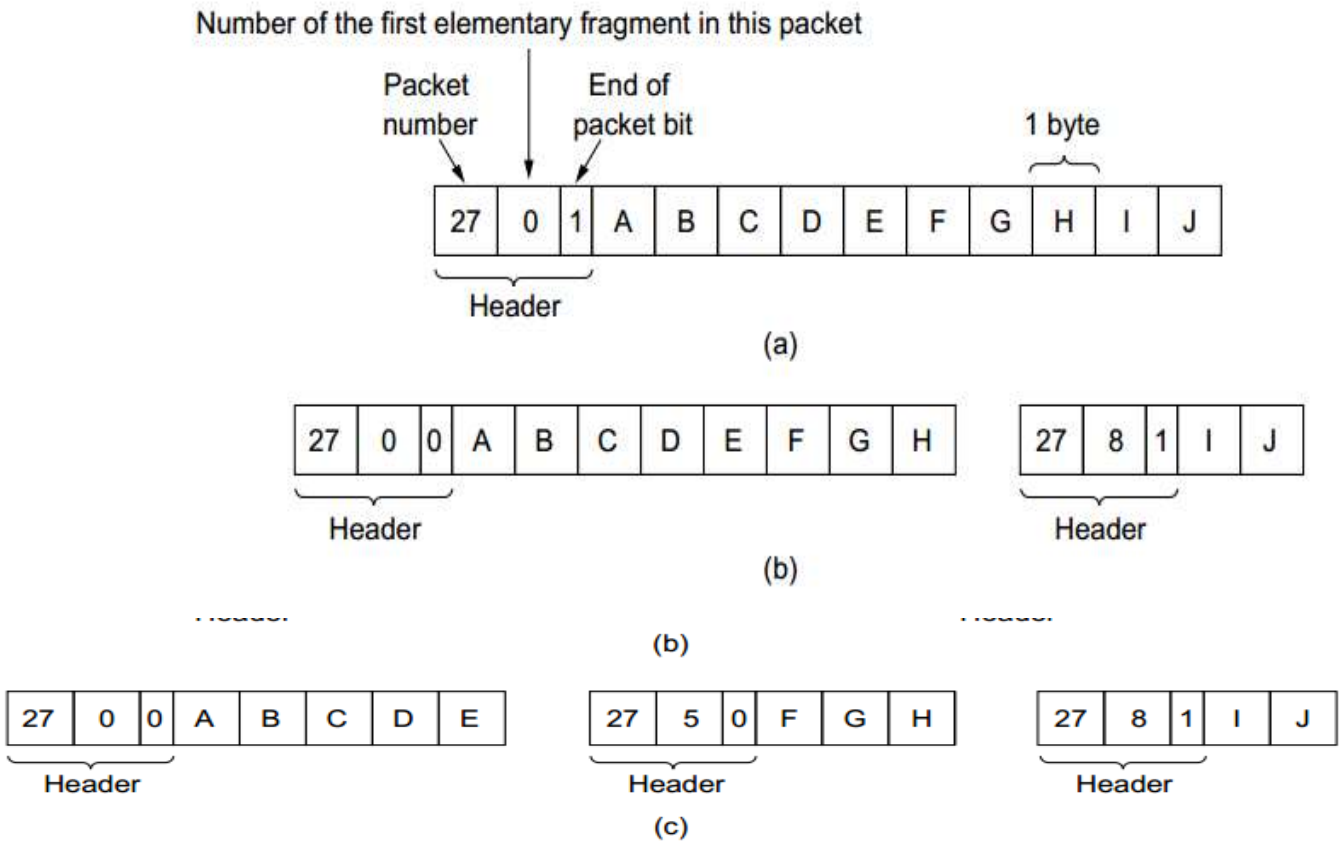

Firewalls

- Sometimes it is better not all your computers can be easily reached by others, or vice versa → **firewall**

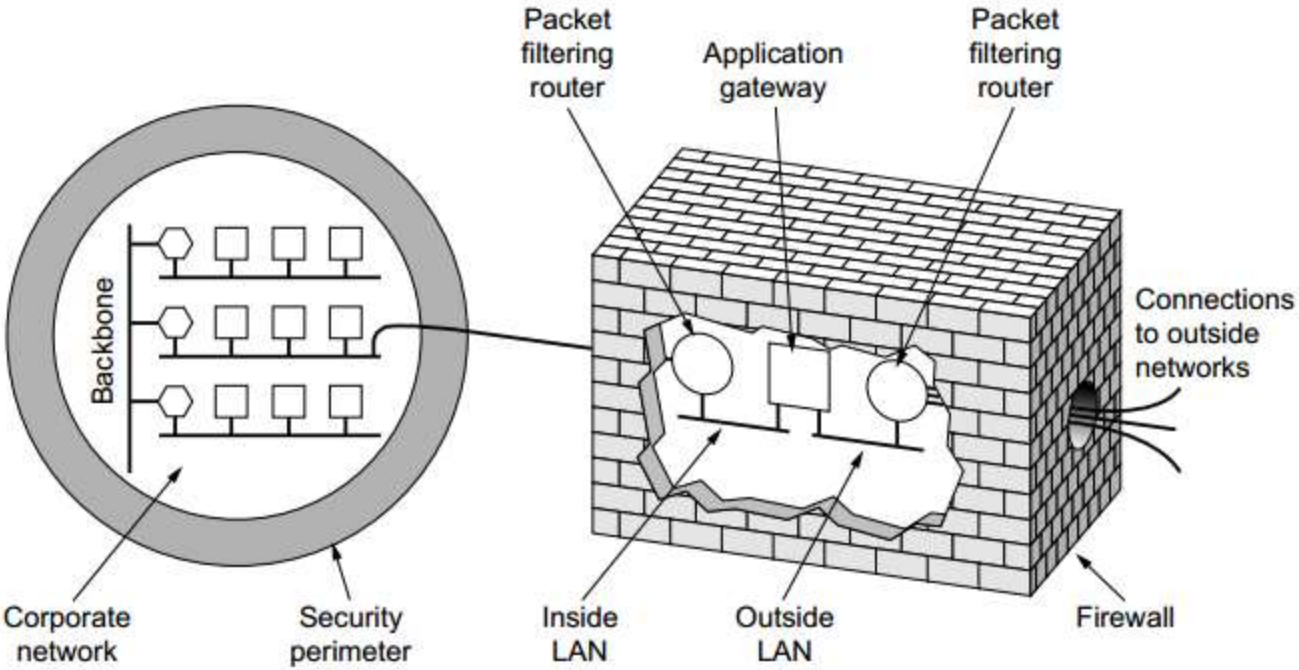

- Packet filter: standard router with extra functionality to inspect packets → Those packets meeting some criterion are forwarded normally, and those failed are dropped
- Application gateway: operates at application level

ATM

Asynchronous Transfer Mode (ATM) has been recommended and been accepted by industry as the transfer mode for Broadband Integrated Services Digital Networks (B-ISDN). ATM has been designed to be able to handle different types of services and applications such as voice, data, image, text and video and mixture of all these.

ATM provides a good bandwidth flexibility and can be used efficiently from local area networks (LANs) and wide area networks (WANs). ATM is a connection-oriented packet switching technique in which all packets are of fixed length of 53 octets[1] where 5 octets for header and 48 octets for information payload field. No processing like error control is done on the information field of ATM cells inside the network and it is carried transparently in the network.

1.1 ATM Fundamental Concept

From a technical point of view, the fundamental underpinning of ATM is:

- to support all existing services as well as emerging services in the future,
- fixed-size cells with VPI and VCI to minimises the switching complexity,
- statistical multiplexing to utilises network resources very efficiently,
- to minimise the processing time at the intermediate nodes and supports very high transmission speeds as well as very low speed by negotiate service contract for a connection with required quality of services,
- to minimise the number of buffers required at the intermediate nodes to bound the delay and the complexity of buffer management,
- guarantees performance requirements of existing and emerging applications,
- layered architecture, and
- Capable of handling bursty traffic.

1.8 Layered Architecture

As with any new technology, though, nothing is really quite that simple. We must consider that ATM is based on a layered architecture.

We'll begin with the physical layer because you still need a physical layer for ATM communications. (The various physical layers for ATM are examined in section 3.2).

On top of the physical layer is the ATM layer. This is where we find the cells.

On top of the ATM layer is what's called the ATM Adaptation Layer (AAL). It runs from end system to end system and is transparent to the ATM network.

The information from the AAL goes through the network in the sense that the protocol information associated with it is in the 48 bytes of the cell, but the network does not look at the AAL information at all.

Of course, as we implement new kinds of traffic on top of ATM, we will see more different kinds of AAL protocols. Several of these will be examined in section 3.4.

2. ATM Principle

ATM is a fast packet oriented transfer mode based on asynchronous time division multiplexing and it uses fixed length (53 bytes) cells. Each ATM cell consists of a information field (48 bytes) and a header (5 bytes). The header is used to identify cells belonging to the same virtual channel and thus used in appropriate routing. Cell sequence integrity is preserved per virtual channel. ATM Adaptation layers (AAL) are used to support various services and provide service specific functions. This AAL specific information is contained in the information field of the ATM cell. Basic ATM cell structure is used for the following functions.

1.3 ATM Cell

The traditional way to deal with bursty data is some form of packet switching technology.

In ATM, the packet is called a cell because all packets in a given network are of fixed length. In ATM, the defined cell has 48 bytes of payload and 5 bytes of header for a total of 53 bytes, or octets. The 5 byte of header has to have enough information in them to allow the network to forward each cell to the proper destination.

An ATM network is an infrastructure that is good at handling cells, and that's all it has to do. Containerised shipping is a good analogy.

1.4 ATM as Universal Transport Networks

All voice, data and video can be digitised. Then a device can converted the original digitised format into the cells. This device appropriately marks the cells, and the cells are multiplexed onto one link going into ATM networks. Then the network can switch and deliver the cells to the appropriate destinations.

Notice that with the network, or the cell switching infrastructure, in place, if you want to add a new traffic type, you don't have to change the infrastructure. You only need to deal with the devices at the edge of the network. In fact, you only have to deploy those devices where you need the new traffic type. This is one of the really attractive aspects of ATM. Only minimal changes are needed when there is a need to change or to improve the network.

1.5 Broadband ISDN

Sometimes there's a bit of confusion between ATM and Broadband ISDN (B-ISDN). The two are related because ATM evolved from the standardisation efforts for B-ISDN. The exact relationship is that ATM is the technology upon which B-ISDN is based.

Usually the term "B-ISDN" is applied to wide area carrier services. Even though the technology foundation is ATM, as we go forward, the term B-ISDN is not usually applied to local area or campus networks. Nonetheless, because they're based on the same technology, the advantages of ATM will still apply.

Asymmetric digital subscriber line (**ADSL**) is a type of digital subscriber line (DSL) technology, a data communications technology that enables faster data transmission over copper telephone lines than a conventional voiceband modem can provide. It does this by utilizing frequencies that are not used by a voice telephone call.[1] A splitter, or DSL filter, allows a single telephone connection to be used for both ADSL service and voice calls at the same time. ADSL can generally only be distributed over short distances from the telephone exchange (the last mile), typically less than 4 kilometres (2 mi),[2] but has been known to exceed 8 kilometres (5 mi) if the originally laid wire gauge allows for further distribution.

What is behind DSL?

- *DSL = **D**igital **S**ubscriber's **L**ine*
- *DSL = broadband technology = sending digital information over a subscriber's line*
- ***x**DSL = family of DSL technology, the "x" is a placeholder*
- *For example, HDSL (H stands for high-speed) is best suited for business customers whereas ADSL (A - asymmetrical) for residential customers*

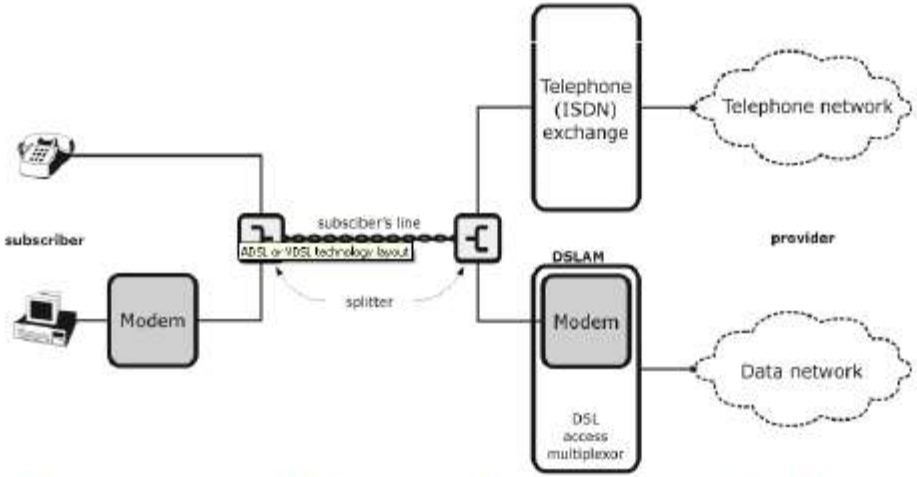

DSL combined with ISDN (it can be combined with POTS in the same way)

DSL vs. dial up V.34 modem

- dial-up, 56k/s V.34 modem
- Low data transfer limited to 38 kbps or 56kbps
- Limited bandwidth up to 3400 Hz
- twisted-pair telephony cables
- Cable modems = broadcast architecture – the link between the user and the internet is shared
- Inconsistent data rates based on amount of traffic

- DSL
- high data transfer
- utilizing more of the available bandwidth of a local loop
- 256 kbps - 100 Mbps
- high-quality digital voice, data and perhaps video
- Coaxial cable has a higher bandwidth compared to bundled twisted-pair telephony cables
- DSL is unshared =consistent data rates for each user – based on the length and conditions of local loop

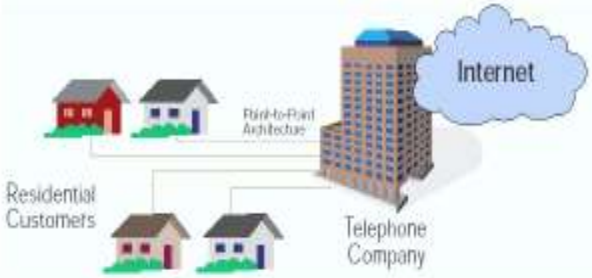

Point-to-point DSL architecture

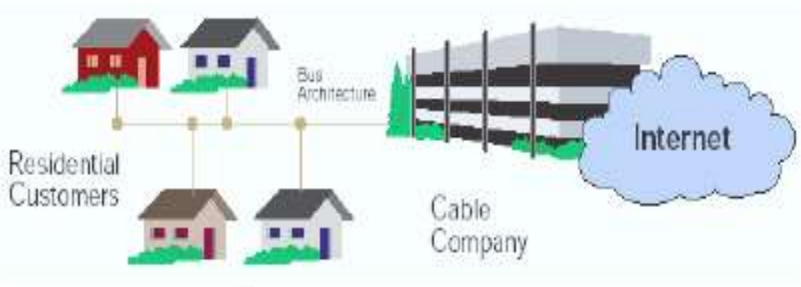

Shared cable architecture

DSL service performance

- *DSL service performance varies due to the following factors:*
  - *The distance between customer and local telephone company's central office or remote terminal*
  - *The type and brand of DSL equipment used at both ends*
  - *The capacity of the digital backbone available for each DSLAM*
  - *The number of users that are aggregated to the available digital backbone*
  - *The behavior of the served community (i.e., how often they use the service; how much data they consume; the type of services offered)*
  - *The quality of the local loop between the customer and the service providers*
  - *The proximity of noise sources to the DSL equipment and the local loop*
  - *The state and power of the user's PC and/or routers*
  - *The condition of the public power feed and grounding*

Technically Speaking

ISDN

- Integrated-services digital network (ISDN) service is a unique example of a type of DSL
- Although it is a digital technology, it uses analog signals over the existing telephony local-loop cabling infrastructure
- ISDN is a public switched-network service
- ISDN defines the protocols to be used up to the network layer. ISDN communication contains data type and switching information, which allows us to make automatic switching of voice calls and data channels.

DSL

- ADSL was created to coexist on the same pair of copper cable as analog voice transmission allowing users to use their existing phone lines
- Pure DSL is point-to-point over the local loop
- ADSL was designed from the ground up to transfer mostly IP based communication. Therefore, it has not implemented universal methods for switching, and PC to PC communication.

- Number of different DSL technologies = different speeds
- HDSL was originally designed as a two-pair technology
- ADSL – as a single-pair technology

ADSL and ISDN

	ISDN	ADSL
Telephony	+	-
Fax	+	-
Remote access	+	+ via Virtual Private Network
LAN-to-LAN	+	+ via VPN
LAN-to-Internet	+	+
Video on Demand	-	+

ISDN connection in the customer house

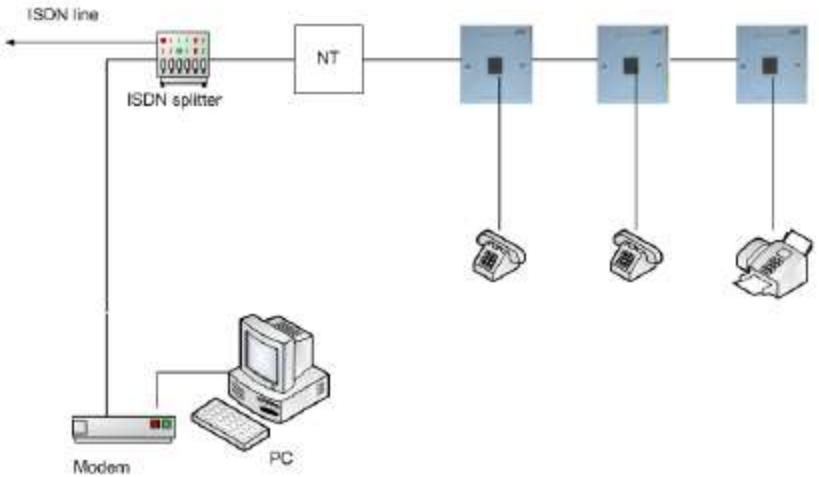

In most countries ISDN uses a frequency range of 80 kHz. This follows from the 160 kbps (full duplex) bit rate. ADSL and ISDN transmit a bit stream over a twisted copper line. ADSL uses a frequency range of about 1.1 MHz for DMT The ADSL-ISDN combination is unlikely to provide the full 5.5 km reach normally provided by ISDN.

Asymmetric digital subscriber line – ADSL

- *High-bit-rate digital technology for consumer-based Internet access*
- *More bandwidth downstream (from the service provider to the subscriber's premises) than upstream (from the subscriber towards network)*
- *Most users view more information than they create, ADSL is optimal for Internet and IP services*

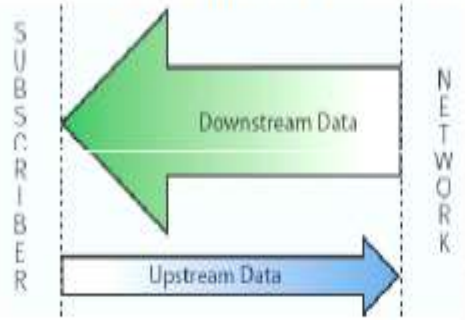

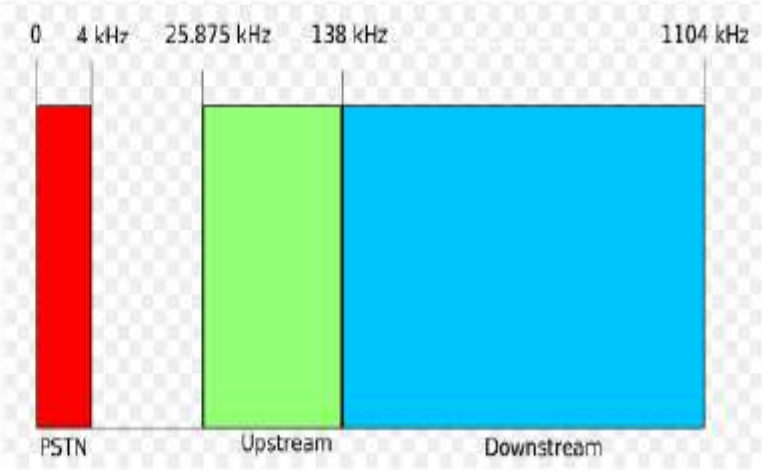

- *Downstream = 256 kb/s - 9 Mb/s*
- *Upstream = 16 kb/s - 640 kb/s*
- *Usually **8Mbps downstream/***
- ***864Kbps upstream** known as **G.dmt***

- *Distances **more than 5.4 km** over a single copper twisted pair of wires, although it should be noted that only the lowest bit rates are available at these lengths.*

High-bit-rate digital subscriber line – HDSL

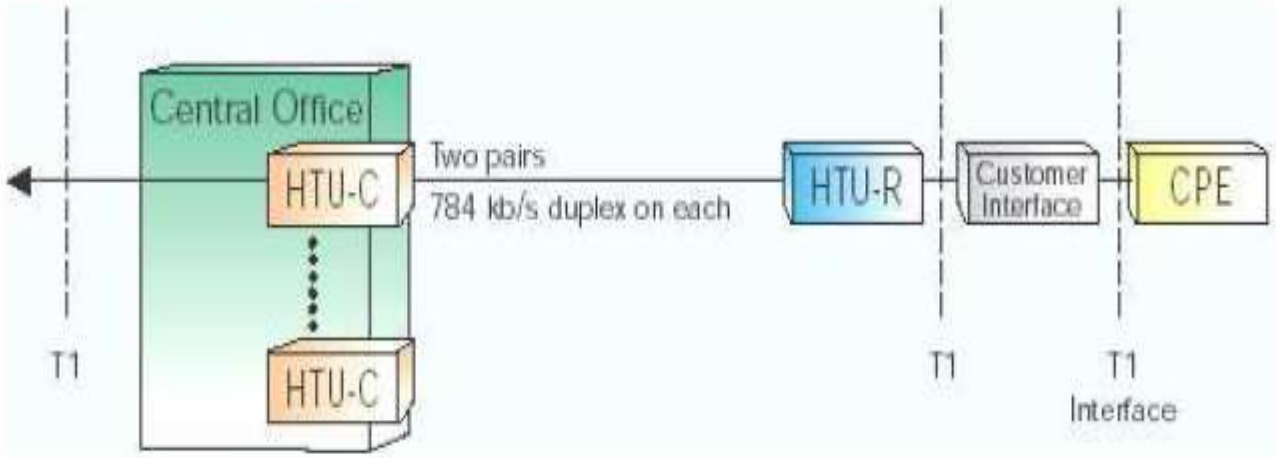

- *Symmetric DSL similar to E1 in that it delivers a bit rate of up to 2.048 Mb/s*
- ***2 copper cables**, twisted pairs, although some very early **2.048 Mb/s** systems required 3 copper twisted–pair cables*
- *HDSL's operating range, in terms of distance, is more limited than that of ADSL*
- *Normally, an HDSL service can serve customers within **3.6 km** of the serving office*
- *Beyond such distances, signal repeaters are needed to extend the service*
- *For businesses that require private branch exchange (PBX) network connections, Internet access, and private data networks*
- *2B1Q or carrier-less amplitude/phase modulation based line encoding.*

xDSL - variants

Some of the more popular xDSL technologies are described as follows:

- *Integrated-services digital network*
- *ISDN digital subscriber line – IDSL*
- *High-bit-rate digital subscriber line – HDSL*
- ***Asymmetric digital subscriber line – ADSL***
- *Rate-adaptive digital subscriber line – R-ADSL*
- *G.Lite*
- ***ADSL2***
- ***ADSL2+***
- *Reach-extended ADSL2 – RE-ADSL2*
- *Very-high-speed digital subscriber line – VDSL*
- *VDSL2*

Integrated-services digital network – ISDN

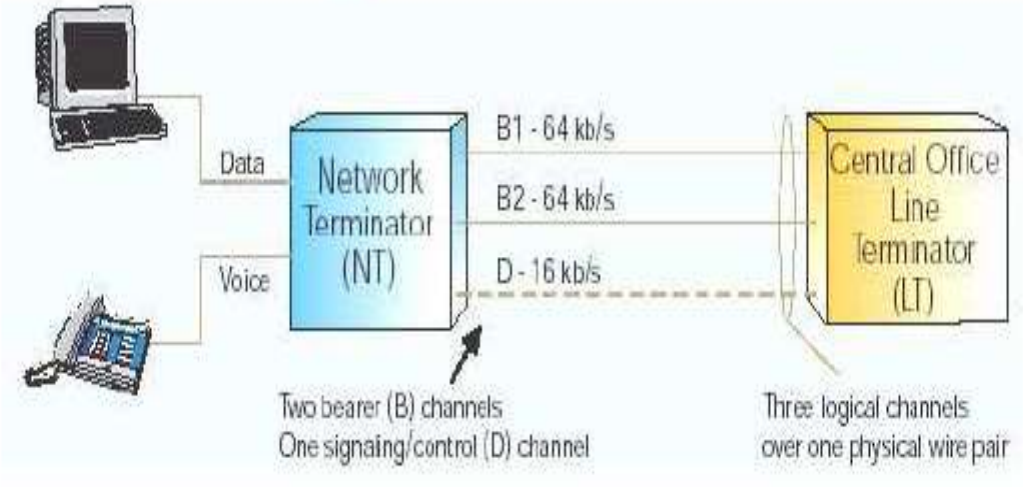

- *Can be considered one of the first DSL technologies.*
- *Simultaneous digital voice, data, and images over conventional copper cables.*
- ***One channel = 64 kb/s***
- *Basic-rate ISDN = 3 logical channels operating over a single copper pair.*
- *Two bearer channels (B channels) carry the voice, data, and images*
- *One signaling/control channel (D channel).*
- *2B+D =160 kb/s symmetrically.*
- *Primary-rate interface = **2.048 Mb/s (30 B + D in Europe)** or 1.544 Mb/s (23 B + D in USA)*
- *2B1Q line coding (two binary, one quaternary). 2B1Q maps 2 bits of data into one symbol; i.e., onto four voltage levels that represent two bits of digital information*

Symmetrical high-speed digital subscriber line – SHDSL

SHDSL - similar to HDSL and HDSL2

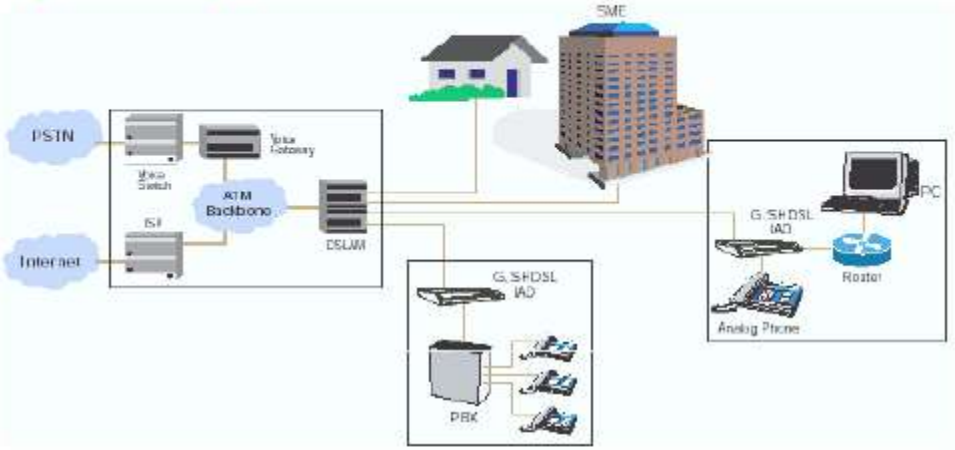

- *Operates over a single pair or two pairs of wire, depending upon the application.*
- *For single-pair operation = **192 kb/s - 2.3 Mb/s** in a symmetrical fashion*
- *Two-pair operation = **384 kb/s - 4.72 Mb/s***
- *More of a business solution than a residential service due to its symmetry*
- *Trellis-coded pulse amplitude modulation (TC-PAM) line coding – it maximizes the use of the lower frequencies, avoiding higher frequencies where signals are more susceptible to crosstalk*

Virtual LANs

- Description:
  - Group of devices on one or more physical LANs that are configured as if they are logically attached to the same wire
  - LAN's based on Logical instead of Physical connections
- Used to help alleviate traffic congestion without adding more bandwidth
- Used to separate out users into logical groups of workers, regardless of actual physical location.
- Usage scenarios:
  - Say you want workers assigned to the same project to be grouped logically together for control of traffic but they are physically located in different physical areas
  - Say you want to divide up the broadcast domain in a large flat network without using a bunch of routers
- Must be supported by the switch: switches must have the ability to support more than one subnet

VLAN Trunking

- One simple solution is to trunk the lines together:
  - On each switch we configure a trunk port (can be any Ethernet port) that is logically connected to multiple VLANs.
  - Then we connect the trunk ports together.
  - The numbering is kept consistent through the use of 802.1Q tags.
- When one switch sends an Ethernet frame to the other, the transmitting switch inserts the 802.1Q tag with the appropriate VID.
- The receiving switch reads the VID and forwards the Ethernet frame to the appropriate VLAN.

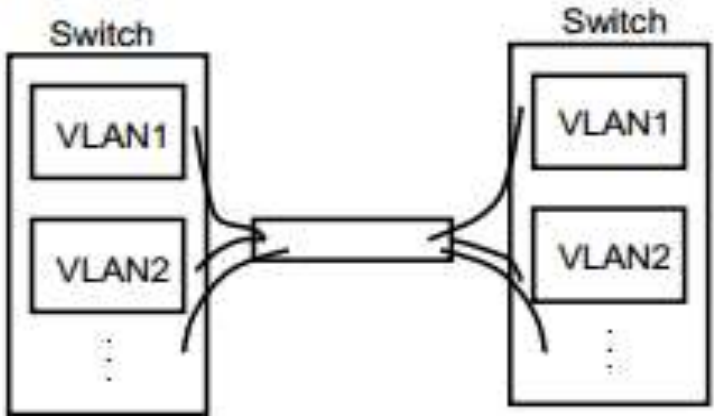

Virtual Private Networks

- VPN's enable an organization to use Public Networks such as the Internet, to provide a **Secure** connection among the organization's wide area network.
- Customers can use VPN's to connect an enterprise Intranet to a wide area network comprised of partners, customers, resellers and suppliers
- Traditionally, businesses have relied on private 56-Kbps or T-1 leased lines to connect remote offices together
- Leased lines are expensive to install and maintain
  - For small companies, the cost is just too high
- Using the Internet as a backbone, a VPN can securely and cost effectively connect all of a companies offices, telecommuters, mobile workers, customers, partners and suppliers.

VPN Functionality

- A VPN needs to provide the following 4 critical functions:
  - Authentication – ensuring that the data originates at the source that it claims.
  - Access Control – restricting unauthorized users form the network.
  - Confidentiality – Preventing anyone from reading the data as it travels through the network
  - Data Integrity – Preventing anyone from tampering with the data as it traverses through the network
- Various approaches exist that offer authentication and access control for a VPN:
  - Challenge Handshake Authentication Protocol (CHAP)
  - Remote Authentication Dial-In Users (RADIUS)
  - Hardware-based tokens
  - Digital certificates

gateway

A gateway is a network point that acts as an entrance to another network. On the Internet, a node or stopping point can be either a gateway node or a host (end-point) node. Both the computers of Internet users and the computers that serve pages to users are host nodes. The computers that control traffic within your company's network or at your local Internet service provider (ISP) are gateway nodes.

In the network for an enterprise, a computer server acting as a gateway node is often also acting as a proxy server and a firewall server. A gateway is often associated with both a router, which knows where to direct a given packet of data that arrives at the gateway, and a switch, which furnishes the actual path in and out of the gateway for a given packet.