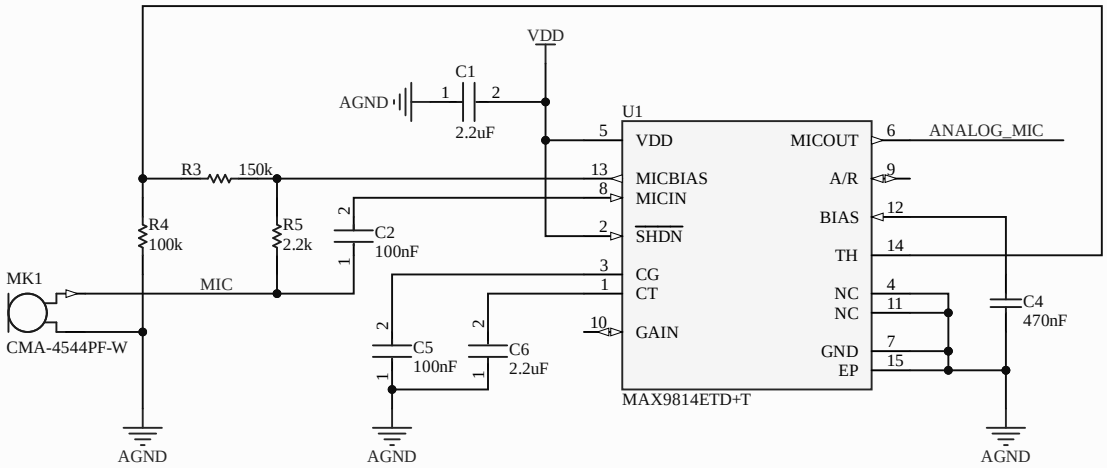

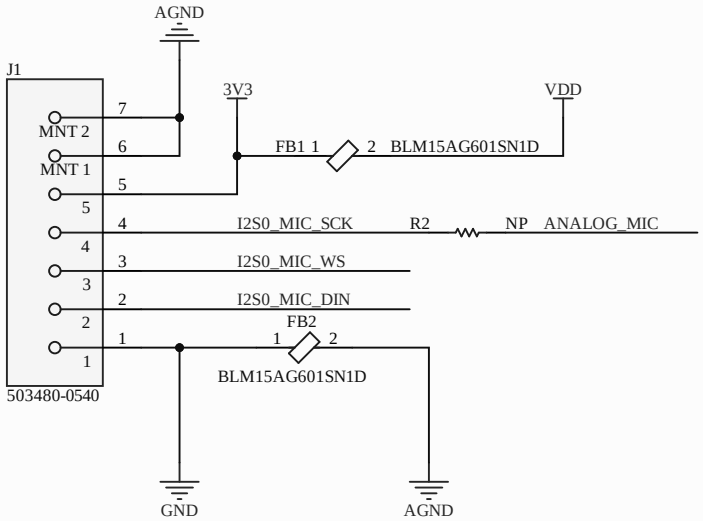

2	LR	Input	Left/Right channel select. When set low, the microphone outputs its signal in the left channel of the I²S frame. When set high, the microphone outputs its signal in the right channel.

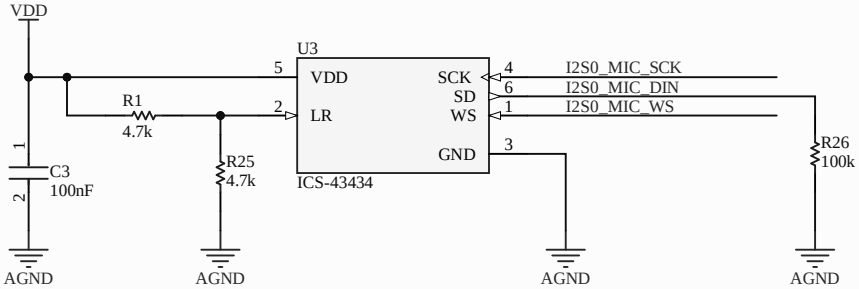

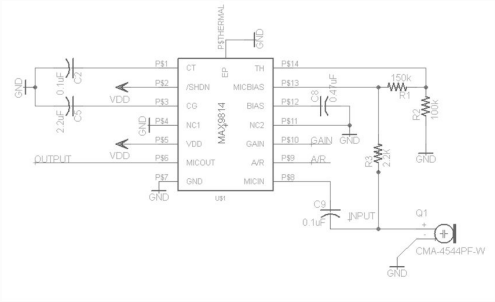

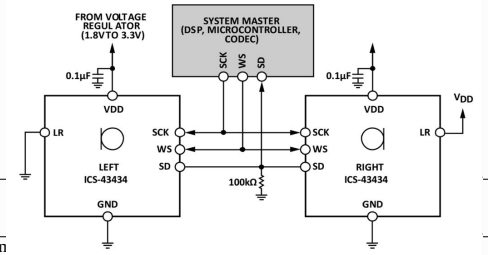

Figure 8. System Block Diagram

Title			
Size A4	Nun		
Date:	7/18/2025	Sheet of	
File:	C:\Users\..\acoustic_mic_gaze.SchDoc	Drawn By:	