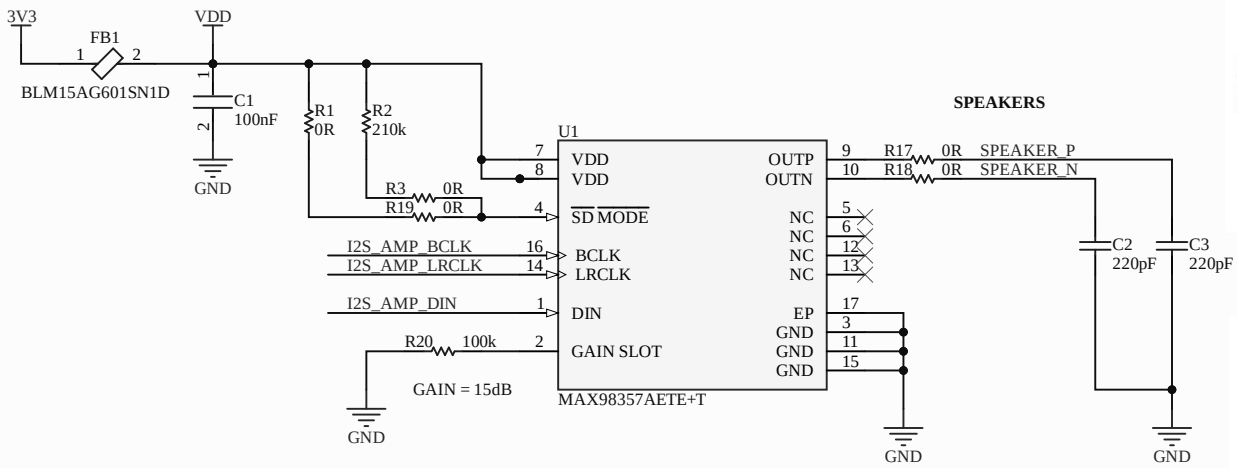

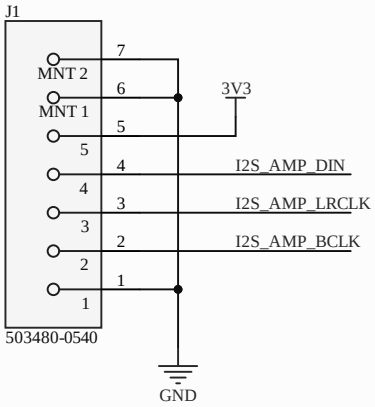

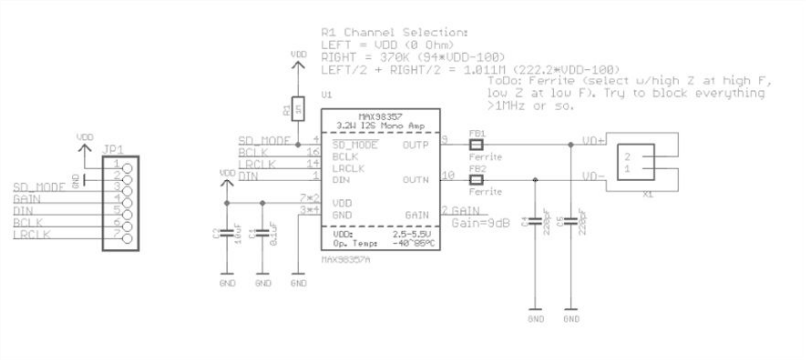

Table 5. $\overline{\text{SD_MODE}}$ Control

$\overline{\text{SD_MODE}}$ STATUS		SELECTED CHANNEL
High	$V_{\overline{SD_MODE}}$ > B2 trip point	Left
Pullup through R_{SMALL}	B2 trip point > $V_{\overline{SD_MODE}}$ > B1 trip point	Right
Pullup through R_{LARGE}	B1 trip point > $V_{\overline{SD_MODE}}$ > B0 trip point	(Left/2 + right/2)
Low	B0 trip point > $V_{\overline{SD_MODE}}$	Shutdown

Table 6. Examples of $\overline{\text{SD_MODE}}$ Pullup Resistor Values

LOGIC VOLTAGE LEVEL (V_{DDIO}) (V)	R_{SMALL} (kΩ)	R_{LARGE} (kΩ)
1.8	69.8	300
3.3	210.2	634

Table 8. Gain Selection

GAIN_SLOT	I²S/LJ GAIN (dB)
Connect to GND through 100kΩ ±5% resistor	15
Connect to GND	12
Unconnected	9
Connect to V_{DD}	6
Connect to V_{DD} through 100kΩ ±5% resistor	3

Title		
Size A4	Number	Revision
Date: 7/18/2025		Sheet of
File: C:\Users\..\acoustic_output_gaze.SchDoc		Drawn By: