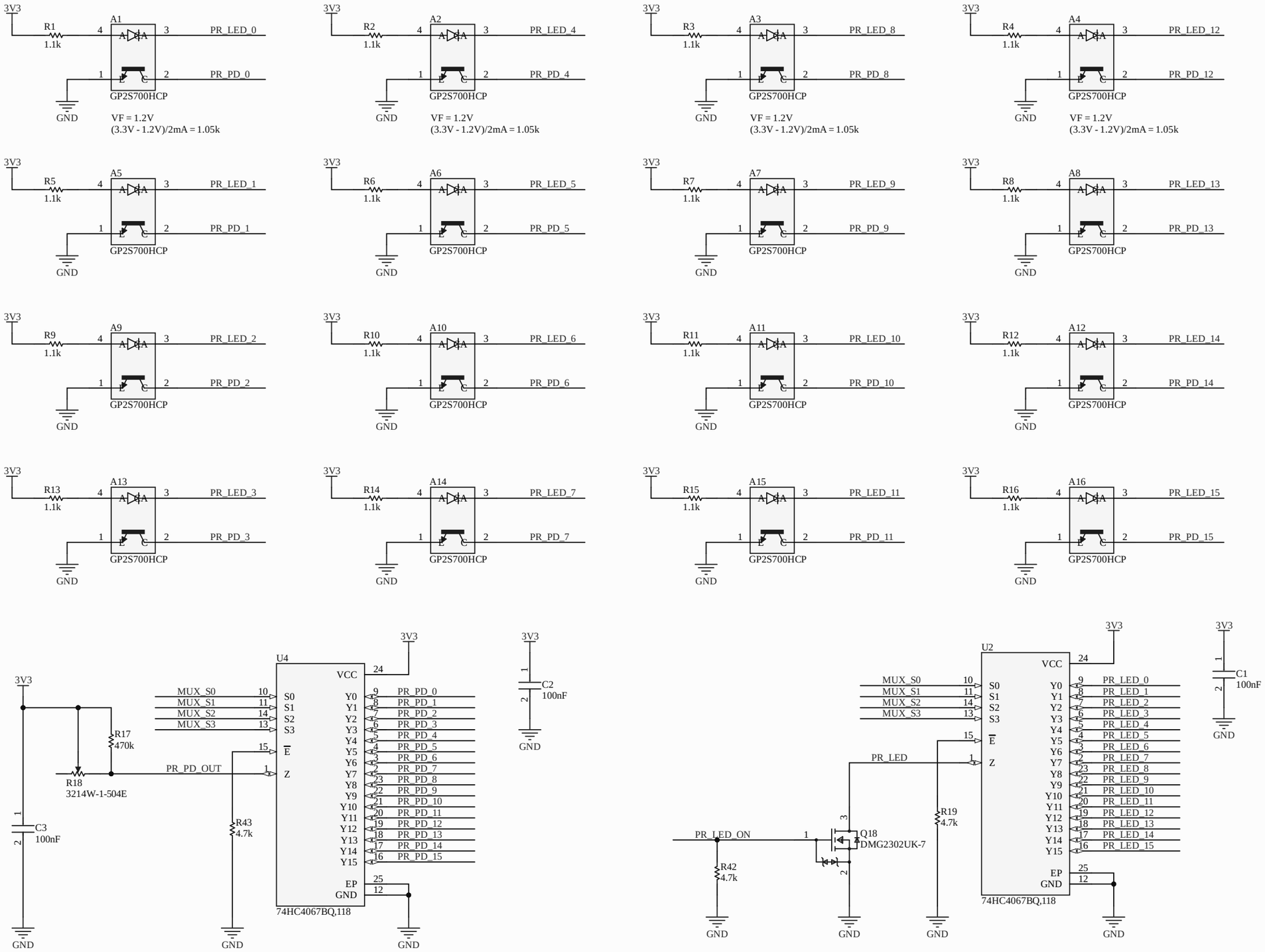

Title		
Size A3	Number	Revision
Date: 7/18/2025	Sheet of	
File: C:\Users\..\photoreflective_face.SchDoc	Drawn By:	

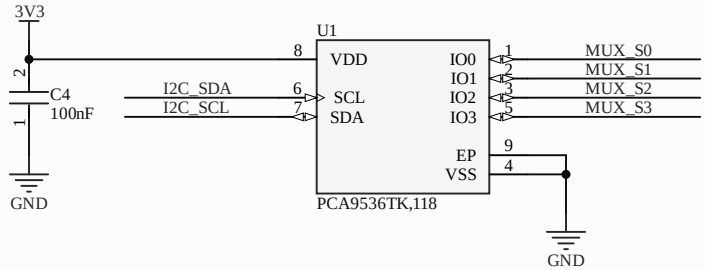

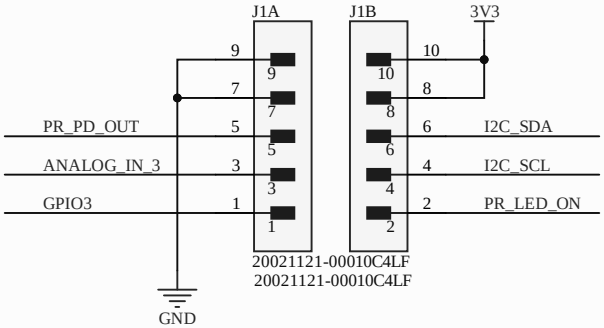

Title		
Size A	Number	Revision
Date: 7/18/2025		Sheet of
File: C:\Users\..\connectors.SchDoc		Drawn By: