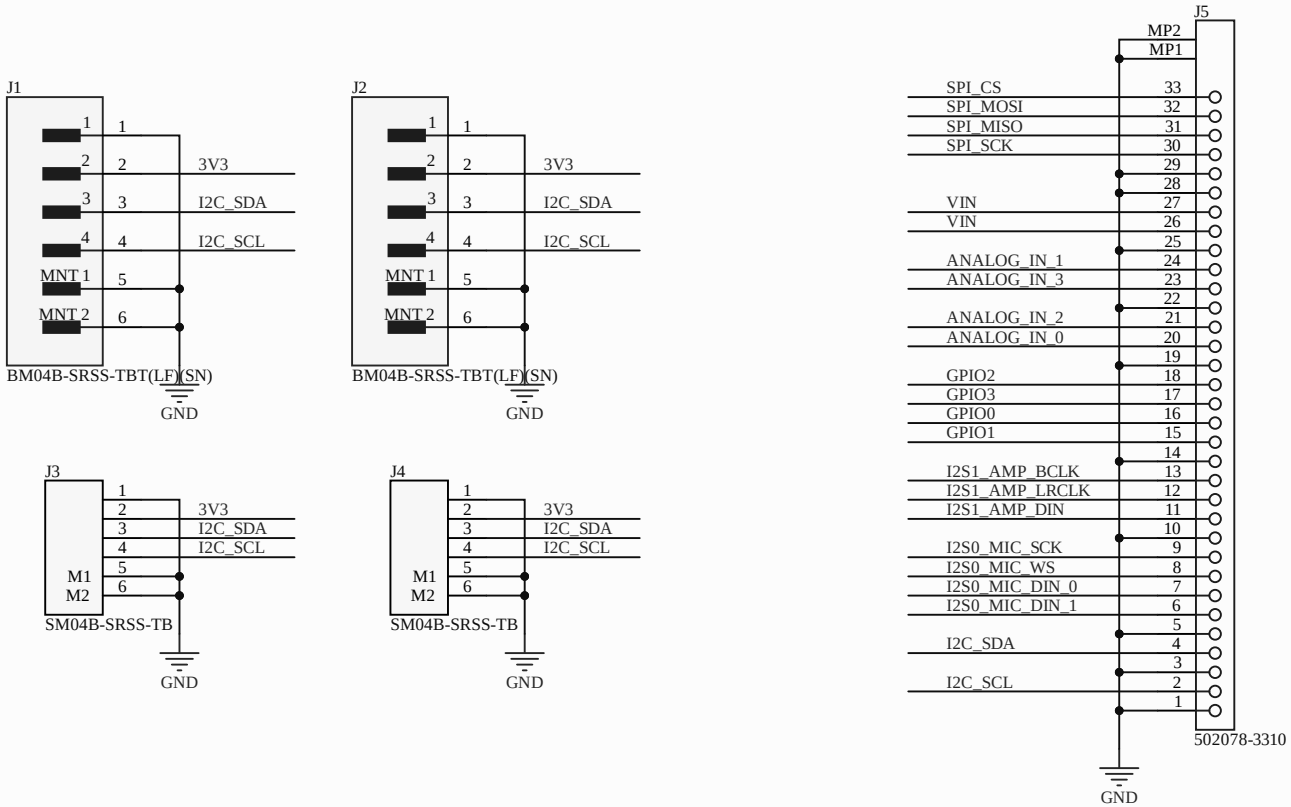

Title		
Size A	Number	Revision
Date: 7/18/2025		Sheet of
File: C:\Users\..\connectors.SchDoc		Drawn By:

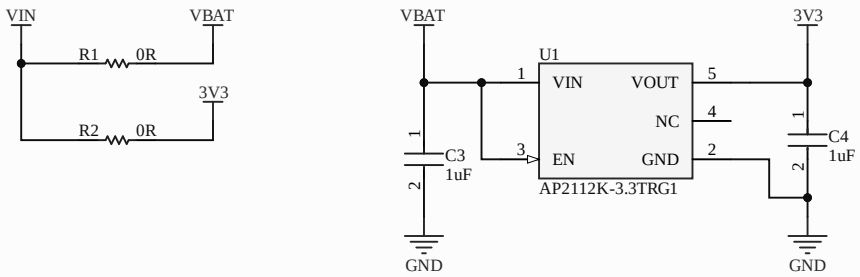

Title		
Size A	Number	Revision
Date: 7/18/2025		Sheet of
File: C:\Users\..\power.SchDoc		Drawn By:

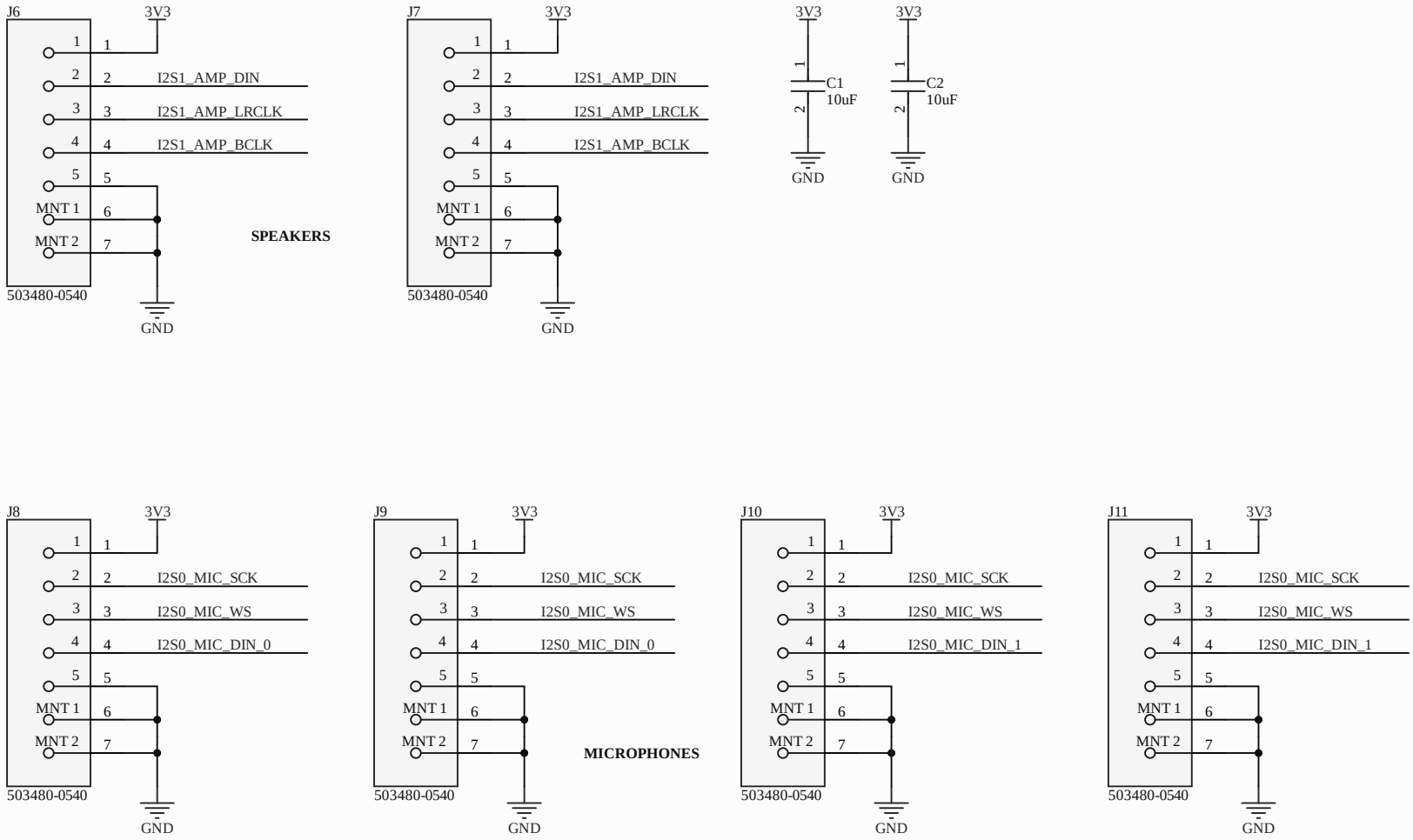

Title		
Size A	Number	Revision
Date: 7/18/2025		Sheet of
File: C:\Users\..\acoustic_connectors.SchDoc		Drawn By:

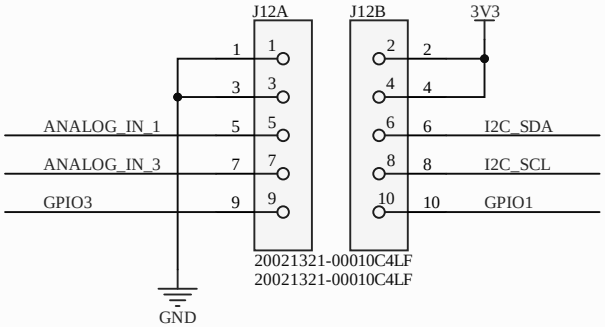

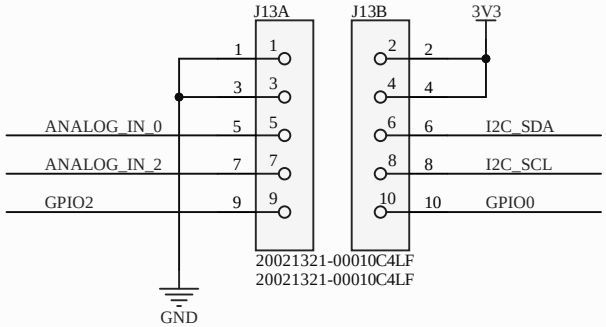

Title		
Size A	Number	Revision
Date: 7/18/2025		Sheet of
File: C:\Users\..\mid_connector.SchDoc		Drawn By: