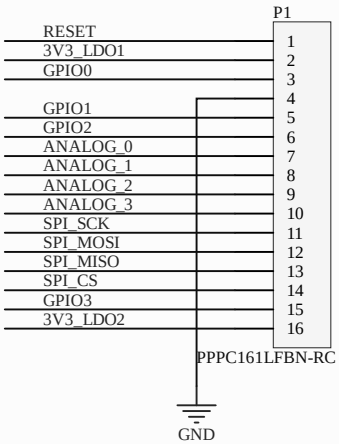

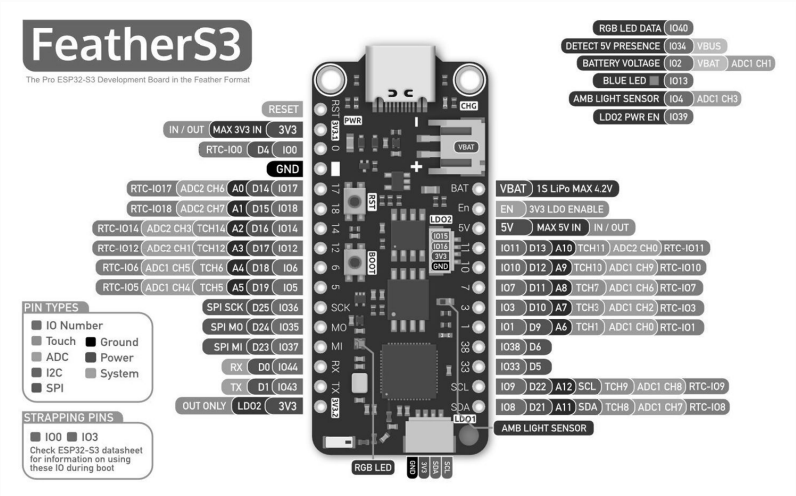

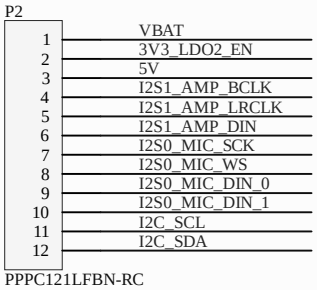

Title		
Size A	Number	Revision
Date: 7/18/2025		Sheet of
File: C:\Users\..\microcontroller.SchDoc		Drawn By:

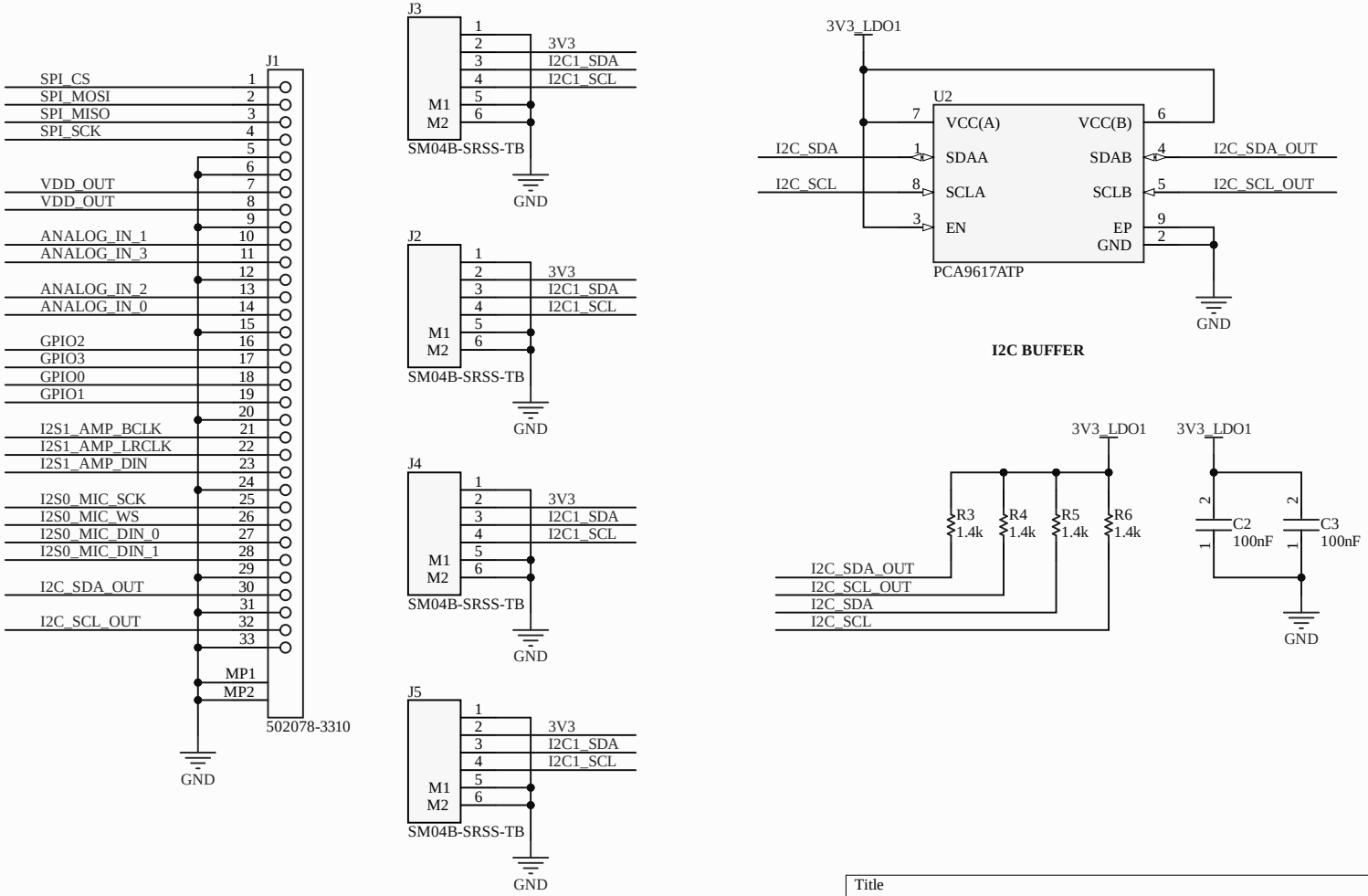

Title		
Size A	Number	Revision
Date: 7/18/2025		Sheet of
File: C:\Users\..\connectors.SchDoc		Drawn By:

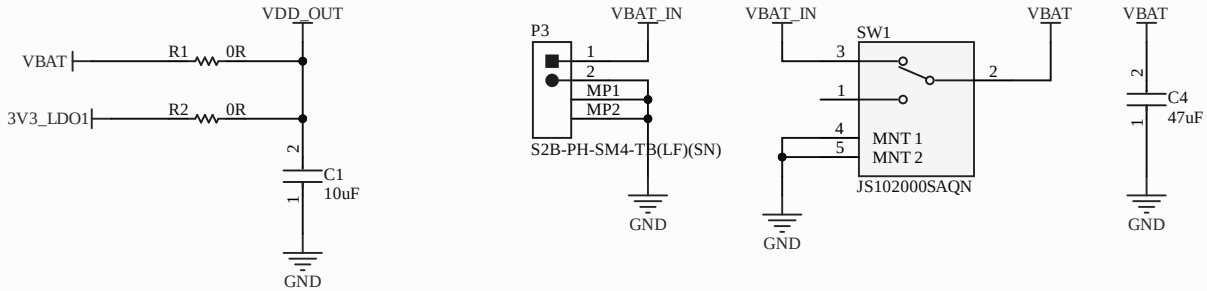

Title		
Size A	Number	Revision
Date: 7/18/2025		Sheet of
File: C:\Users\..\power.SchDoc		Drawn By:

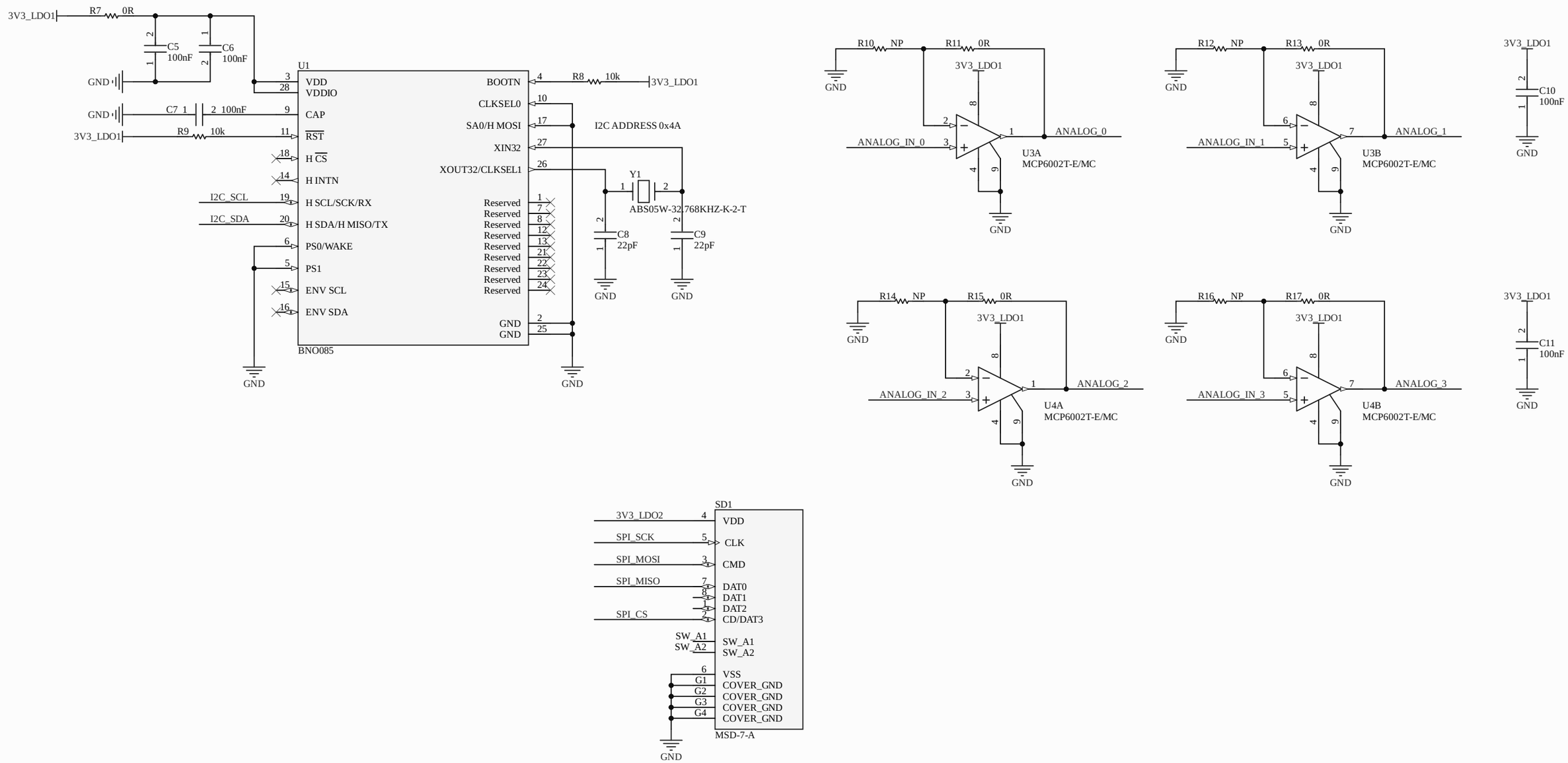

Title		
Size A3	Number	Revision
Date: 7/18/2025		Sheet of
File: C:\Users\..\peripherals.SchDoc		Drawn By: