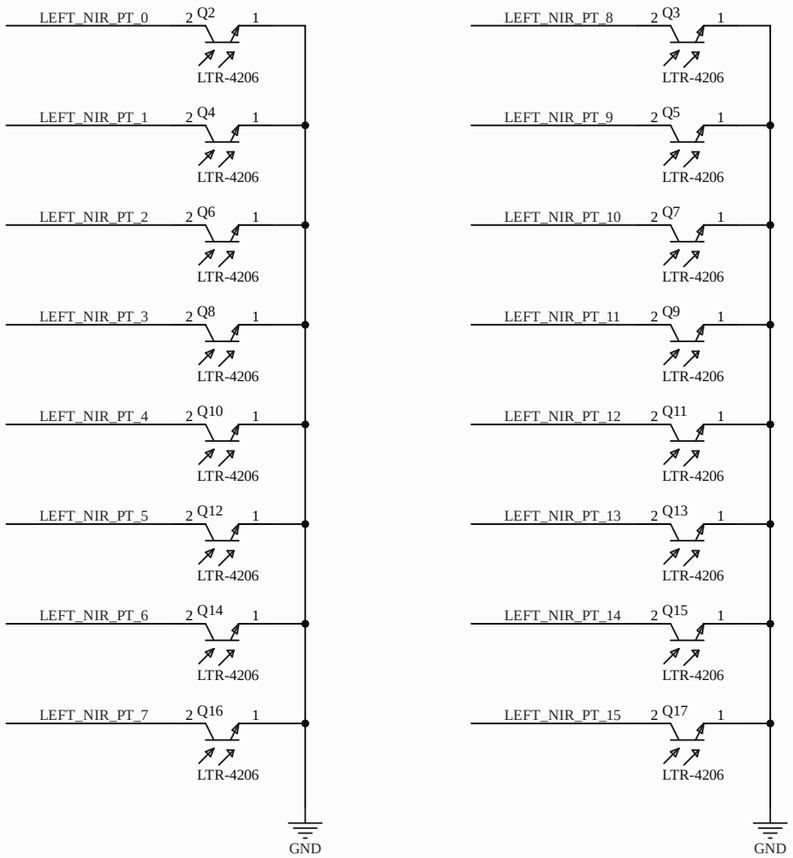

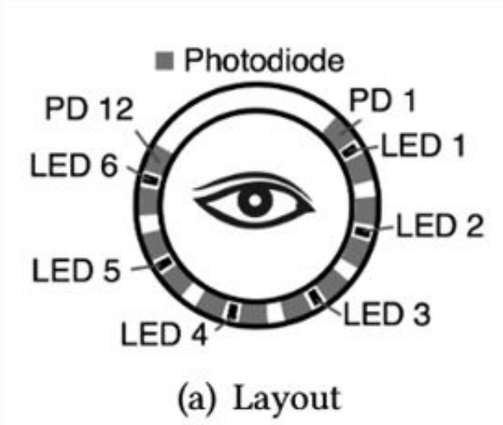

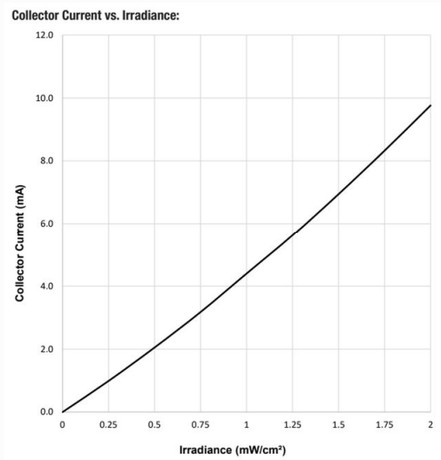

R = 3.3V / 10mA = 330R MIN RESISTANCE
R = 3.3V / 1mA = 3300R RESISTANCE
GO WITH 5K TRIM POT

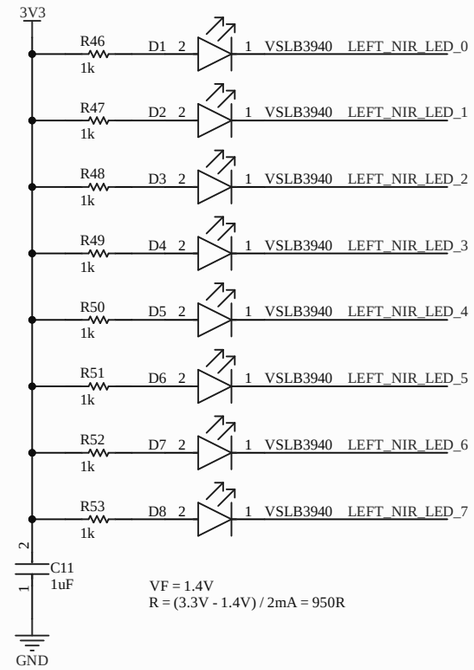

VF = 1.4V
R = (3.3V - 1.4V) / 2mA = 950R

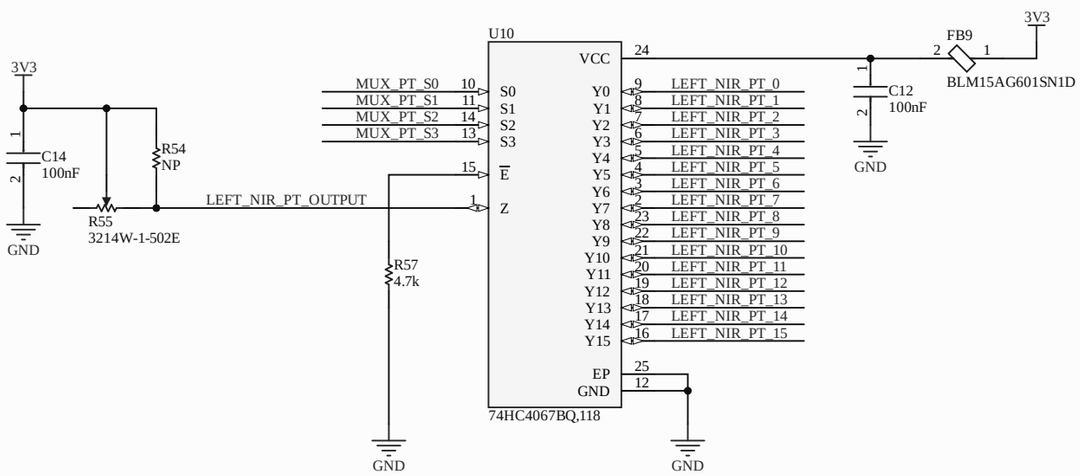

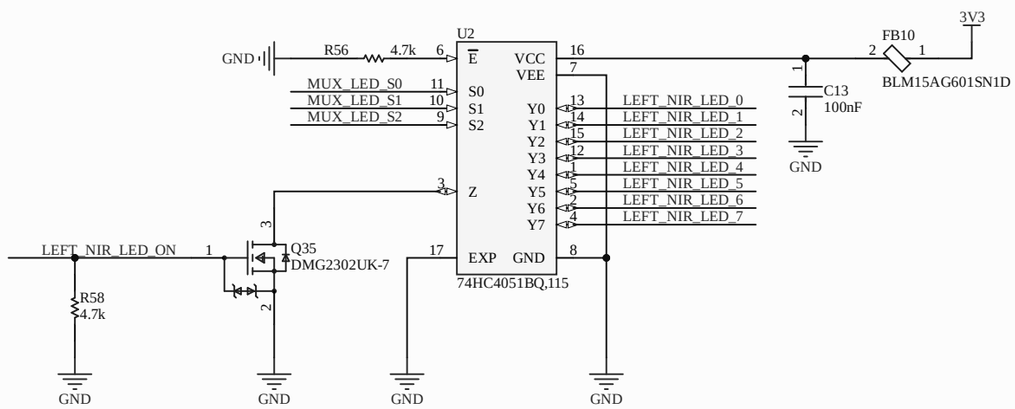

Title		
Size A3	Number	Revision
Date: 7/18/2025		Sheet of
File: C:\Users\..\left_led_gaze.SchDoc		Drawn By:

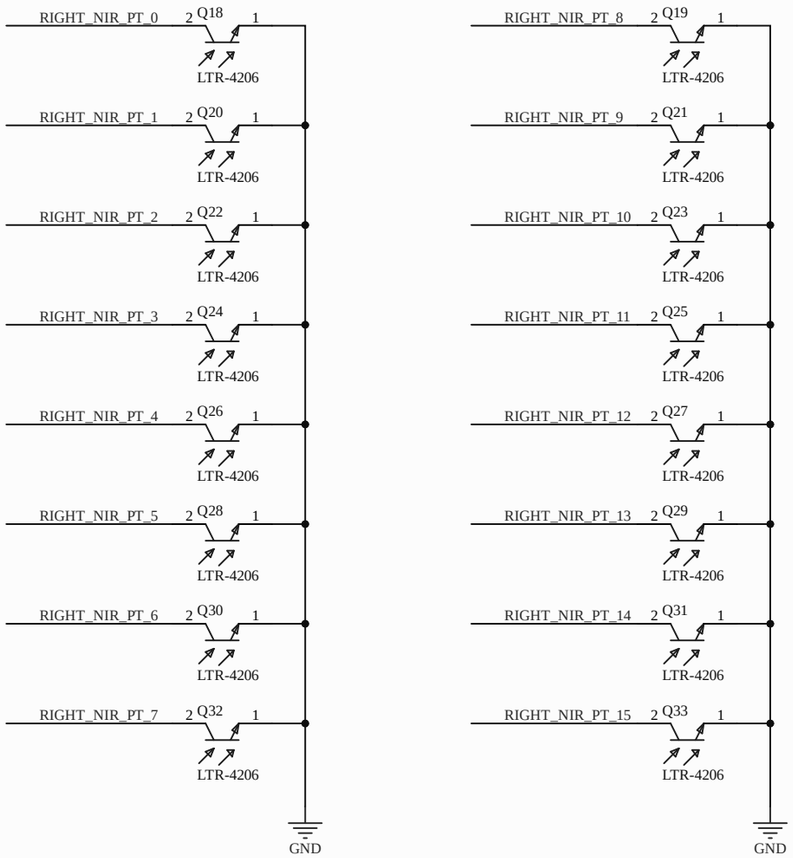

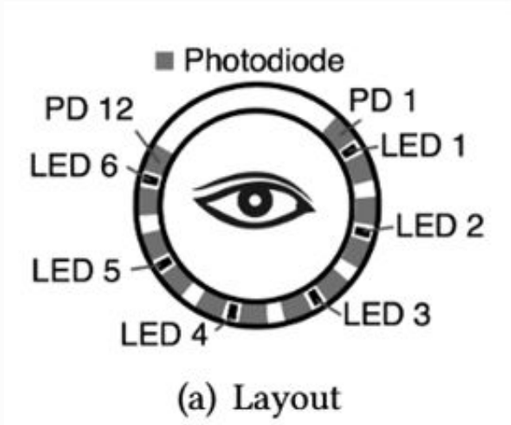

(a) Layout

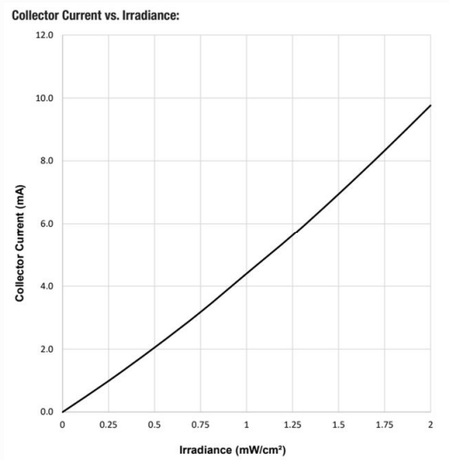

R = 3.3V / 10mA = 330R MIN RESISTANCE
R = 3.3V / 1mA = 3300R RESISTANCE
GO WITH 5K TRIM POT

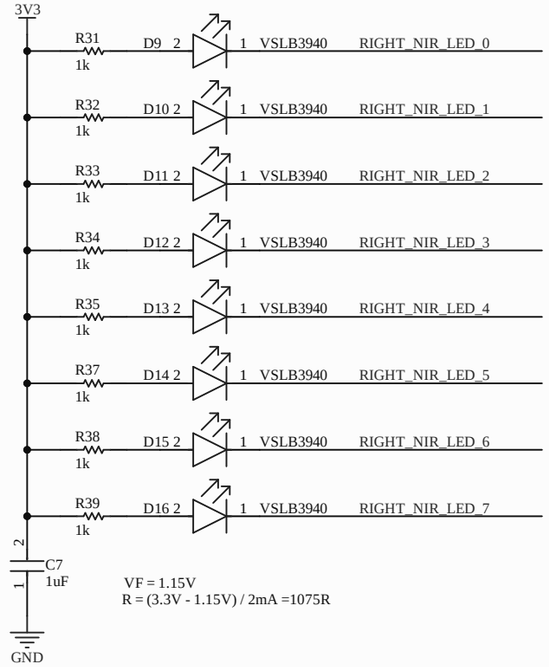

VF = 1.15V
R = (3.3V - 1.15V) / 2mA =1075R

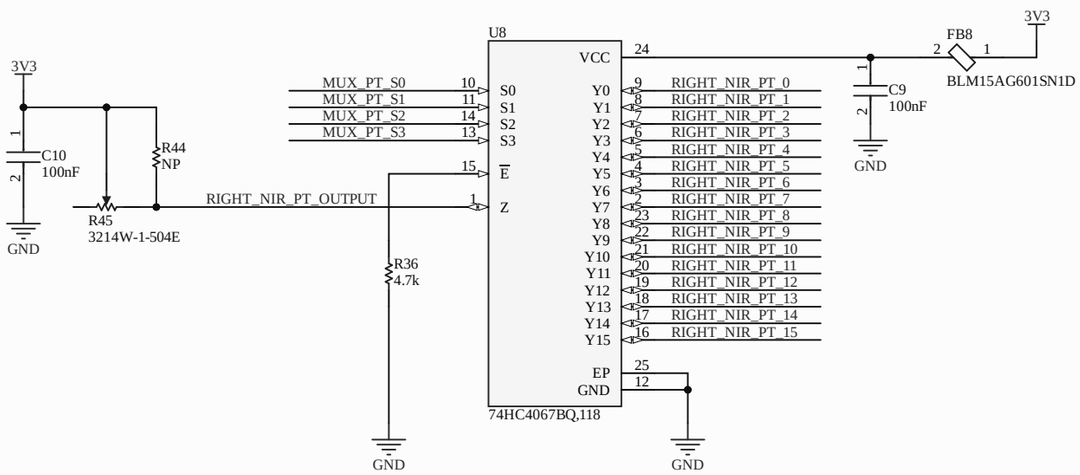

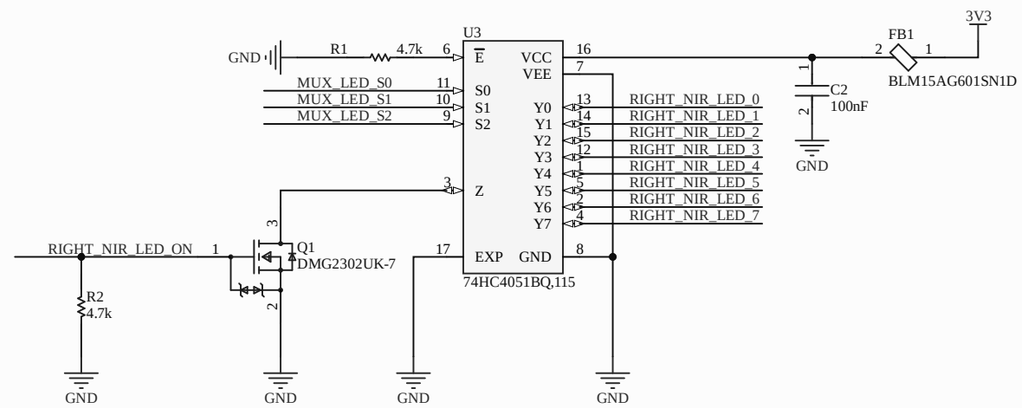

Title		
Size A3	Number	Revision
Date: 7/18/2025		Sheet of
File: C:\Users\..\right_led_gaze.SchDoc		Drawn By:

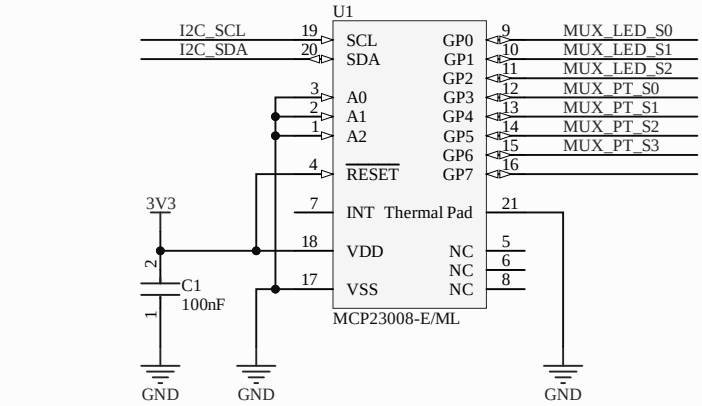

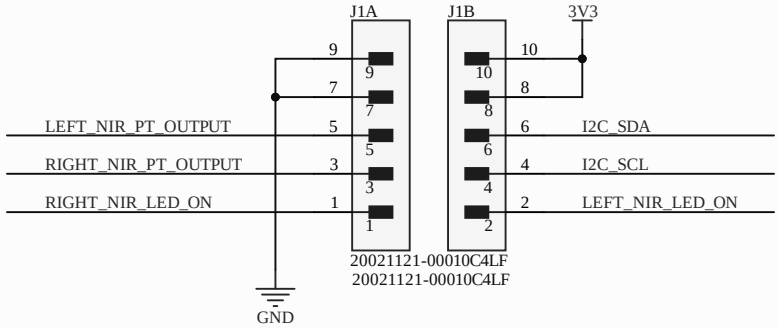

Title		
Size A	Number	Revision
Date: 7/18/2025		Sheet of
File: C:\Users\..\connectors.SchDoc		Drawn By: