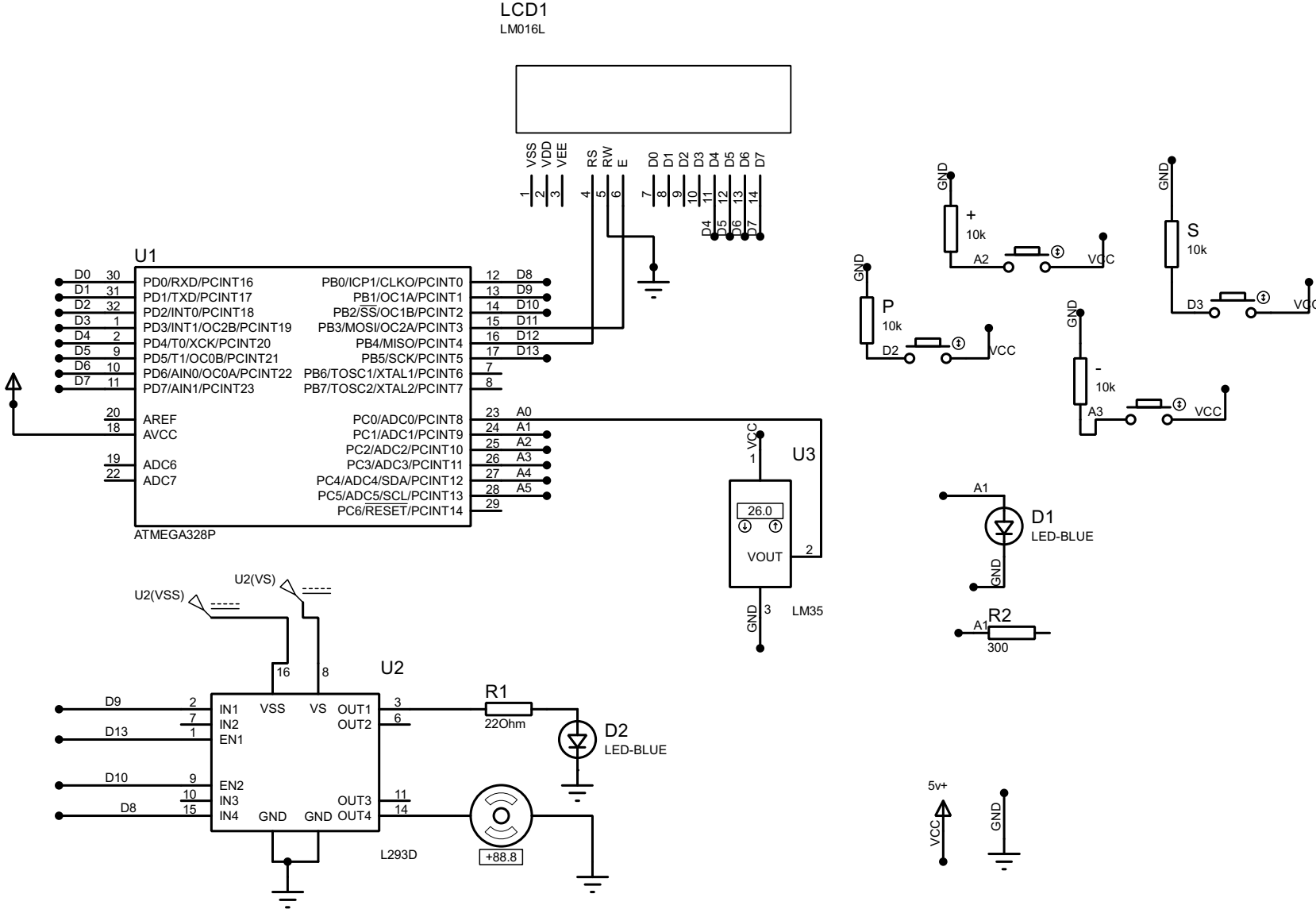
LCD1
LM016L
VSS VDD VEE RS RW E D0 D1 D2 D3 D4 D5 D6 D7
U1
ATMEGA328P
PD0/RXD/PCINT16
PD1/TXD/PCINT17
PD2/INT0/PCINT18
PD3/INT1/OC2B/PCINT19
PD4/T0/XCK/PCINT20
PD5/T1/OC0B/PCINT21
PD6/AIN0/OC0A/PCINT22
PD7/AIN1/PCINT23
AREF
AVCC
ADC6
ADC7
PB0/ICP1/CLKO/PCINT0
PB1/OC1A/PCINT1
PB2/SS/OC1B/PCINT2
PB3/MOSI/OC2A/PCINT3
PB4/MISO/PCINT4
PB5/SCK/PCINT5
PB6/TOSC1/XTAL1/PCINT6
PB7/TOSC2/XTAL2/PCINT7
PC0/ADC0/PCINT8
PC1/ADC1/PCINT9
PC2/ADC2/PCINT10
PC3/ADC3/PCINT11
PC4/ADC4/SDA/PCINT12
PC5/ADC5/SCL/PCINT13
PC6/RESET/PCINT14
U3
LM35
26.0
VOUT
VCC
GND
U2
L293D
IN1 IN2 EN1 EN2 IN3 IN4
VSS VS GND GND
OUT1 OUT2 OUT3 OUT4
U2(VS)
U2(VSS)
R1
22Ohm
D2
LED-BLUE
+88.8
P
S
10k
D1
LED-BLUE
R2
300
5v+