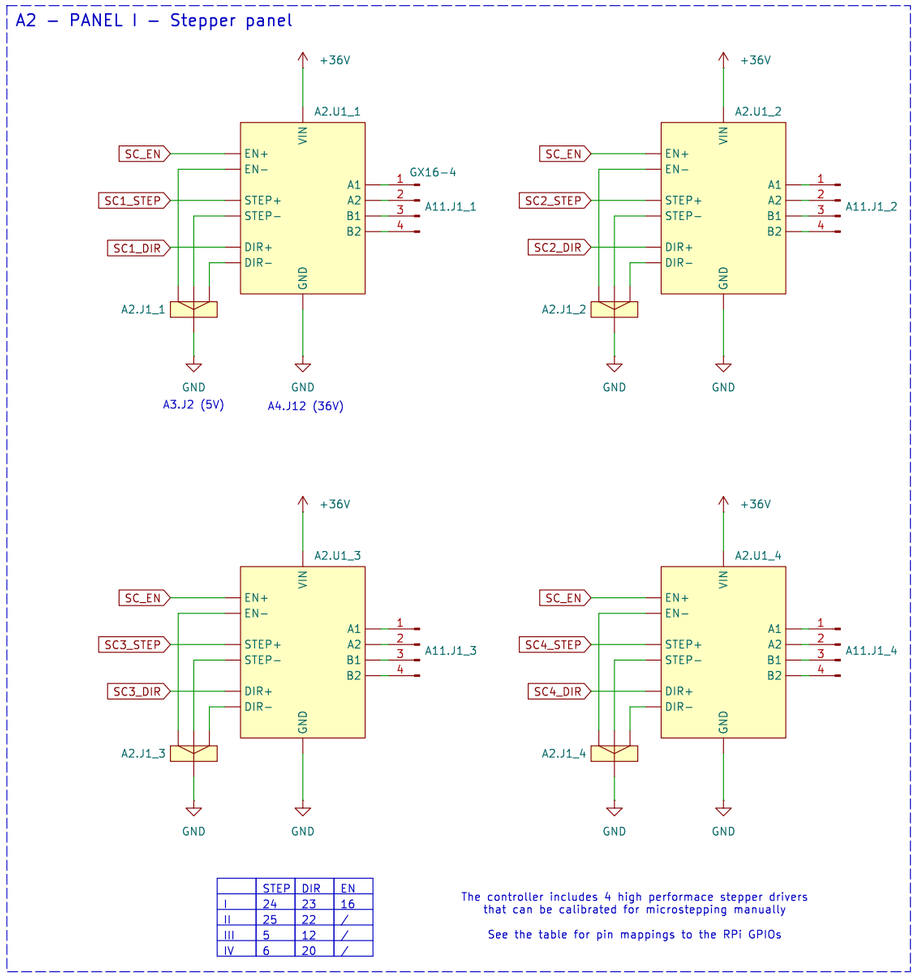

	STEP	DIR	EN
I	24	23	16
II	25	22	/
III	5	12	/
IV	6	20	/

The controller includes 4 high performace stepper drivers that can be calibrated for microstepping manually

See the table for pin mappings to the RPi GPIOs

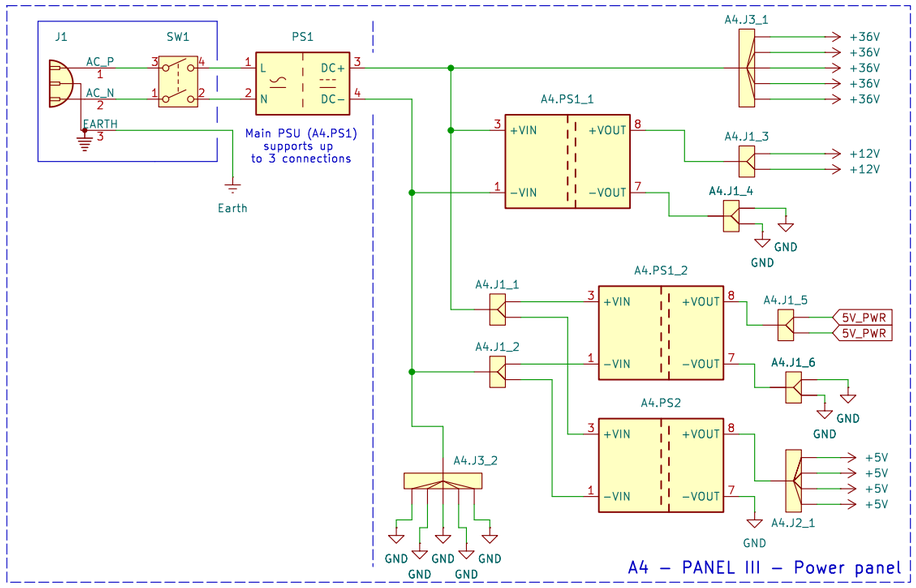

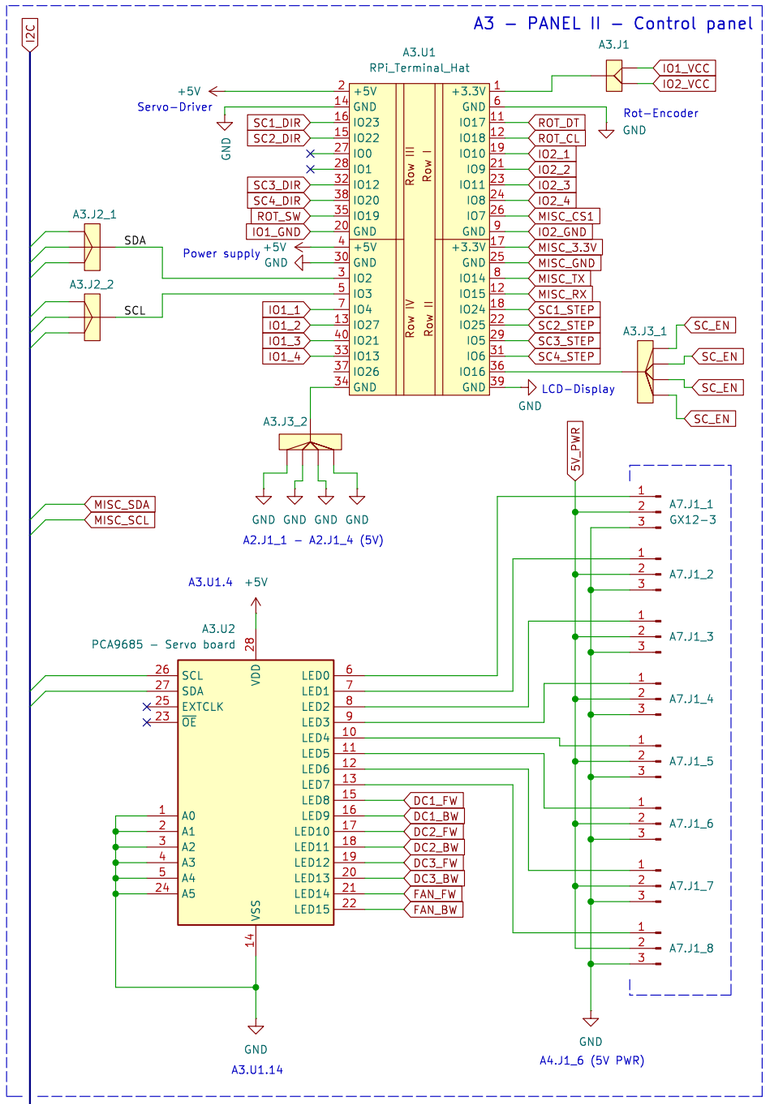

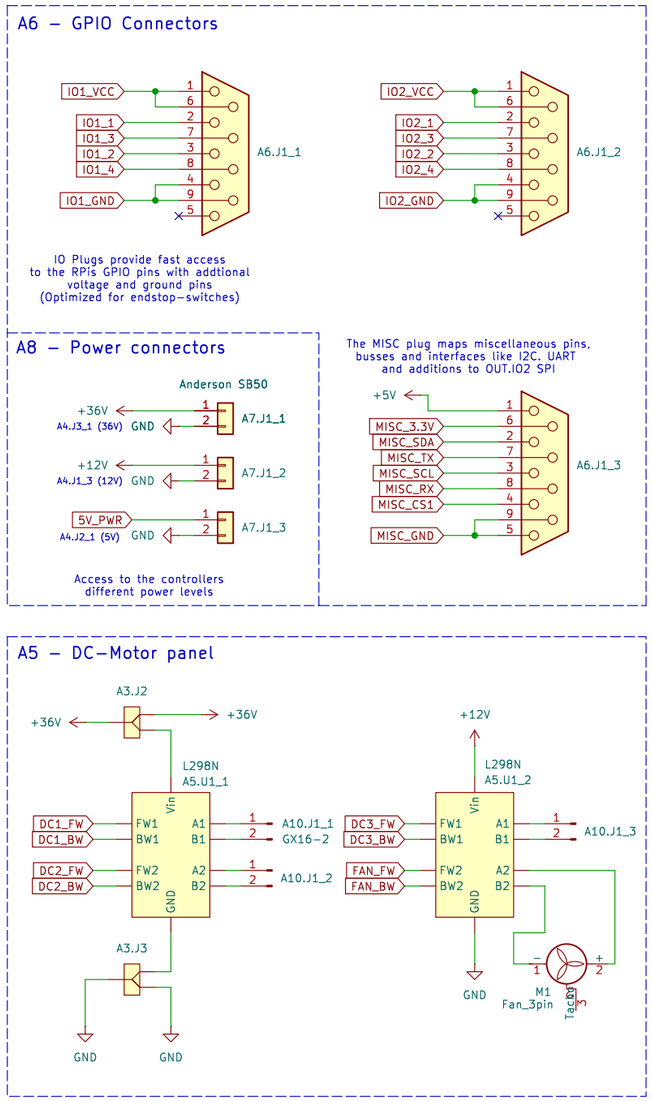

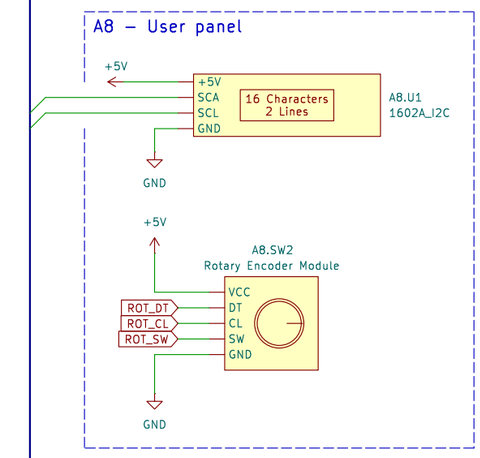

A6.J1_1 – Connection

PIN	RPi
1	+3.3V
2	4
3	27
4	GND
5	–
6	+3.3V
7	21
8	13
9	GND

A6.J1_2 – Special functions

PIN	RPi	Special
1	+3.3V	
2	10	MOSI
3	9	MISO
4	GND	
5	–	
6	+3.3V	
7	11	SCLK
8	8	CS0
9	GND	

A6.J1_3 – Special functions

PIN	RPi	Special
1	+5V	
2	2	SDA
3	3	SCL
4	7	CS1
5	GND	
6	3.3V	
7	14	TX
8	15	RX
9	GND	

400W
Universal Robot Driver
CornerLab

Sheet: /
File: RDX.kicad_sch

Title: RDX – Robot Driver Mk.X

Size: A3	Date: 2026–04–01	**Rev: 1.2.1**
KiCad E.D.A. 9.0.7		Id: 1/1