A2 – PANEL I – Stepper Panel

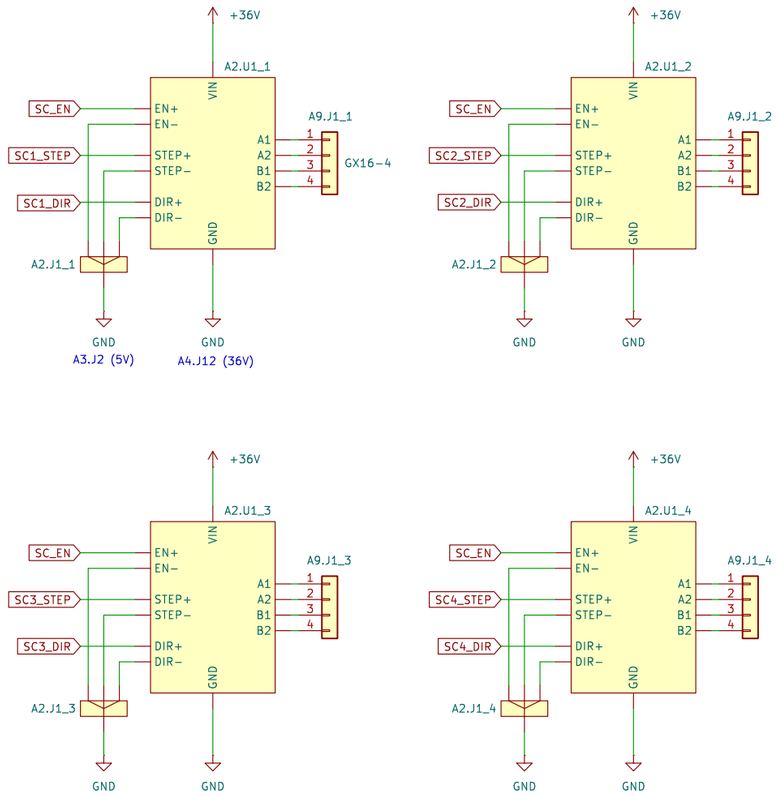

	STEP	DIR	EN
I	6	12	5
II	13	16	/
III	19	20	/
IV	26	21	/

The controller includes 4 high performace stepper drivers that can be calibrated for microstepping manually

See the table for pin mappings to the RPi GPIOs

A3 – PANEL II – Control panel

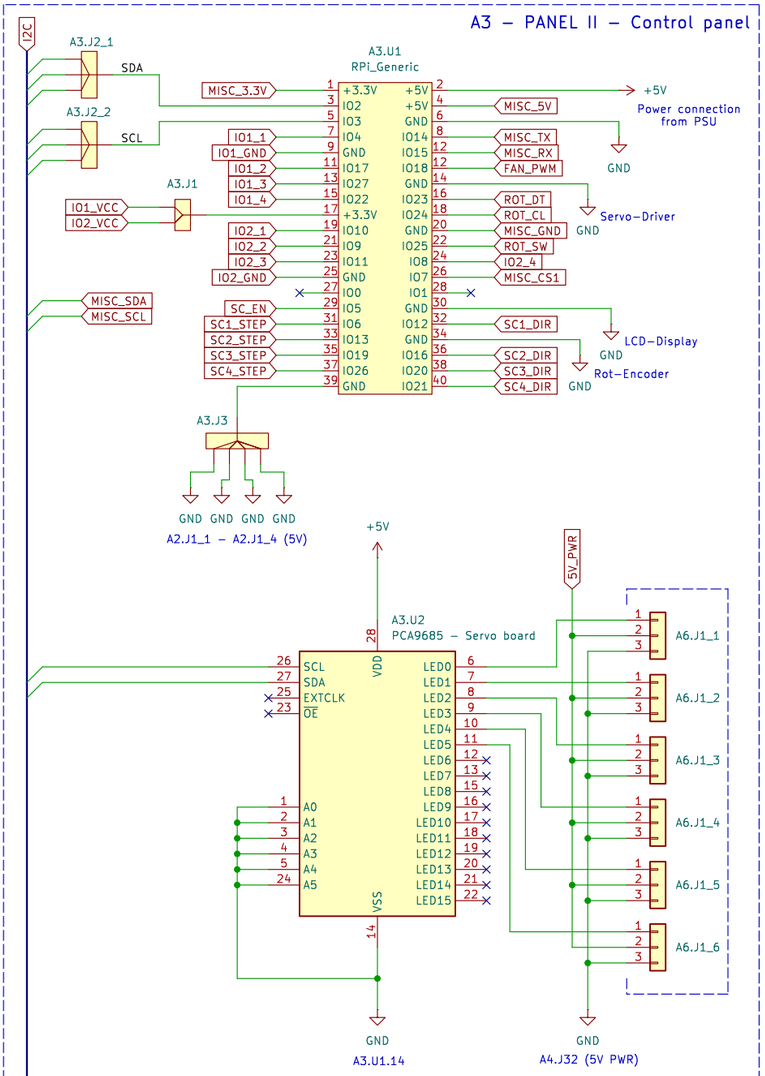

A5 – GPIO Connectors

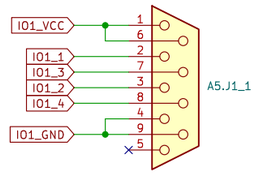

IO Plugs provide fast access to the RPis GPIO pins with addtional voltage and ground pins (Optimized for endstop-switches)

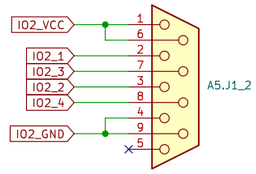

The MISC plug maps miscellaneous pins, busses and interfaces like I2C, UART and additions to OUT.IO2 SPI

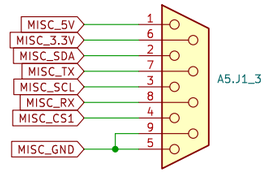

A7 – Power connector

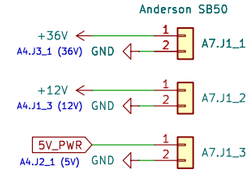

Access to the controllers different power levels

A4 – PANEL III – Power panel

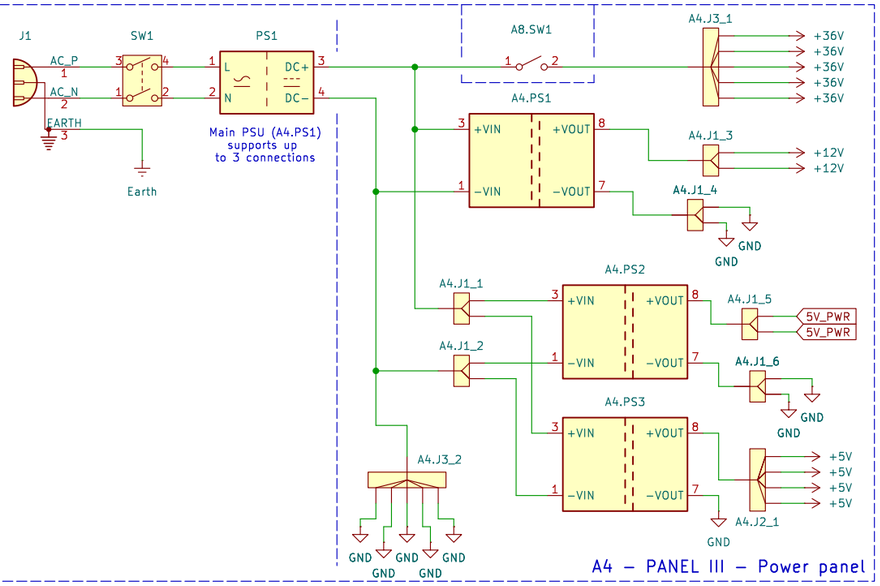

A8 – Input panel

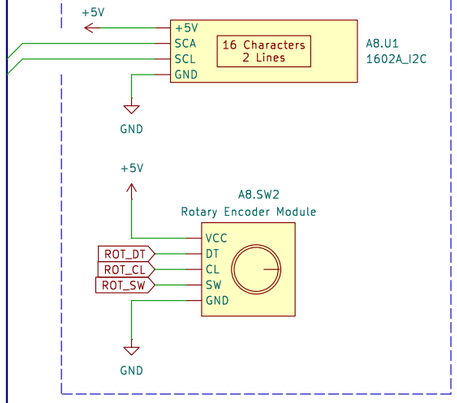

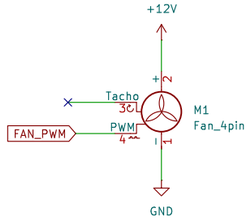

A5.J1_2 – Special functions

PIN	RPi	Special
1	+3.3V	
2	10	MOSI
3	9	MISO
4	GND	
5	–	
6	+3.3V	
7	11	SCLK
8	8	CS
9	GND	

A5.J1_3 – Special functions

PIN	RPi	Special
1	+5V	
2	2	SDA
3	3	SCL
4	7	CS1
5	GND	
6	3.3V	
7	14	TX
8	15	RX
9	GND	

400W
Universal Robot Driver
CornerLab

Sheet: /
File: RDX.kicad_sch

Title: RDX – Robot Driver Mk.X

Size: A3	Date: 2026-04-01	**Rev: 1.2.0**
KiCad E.D.A. 9.0.7		Id: 1/1