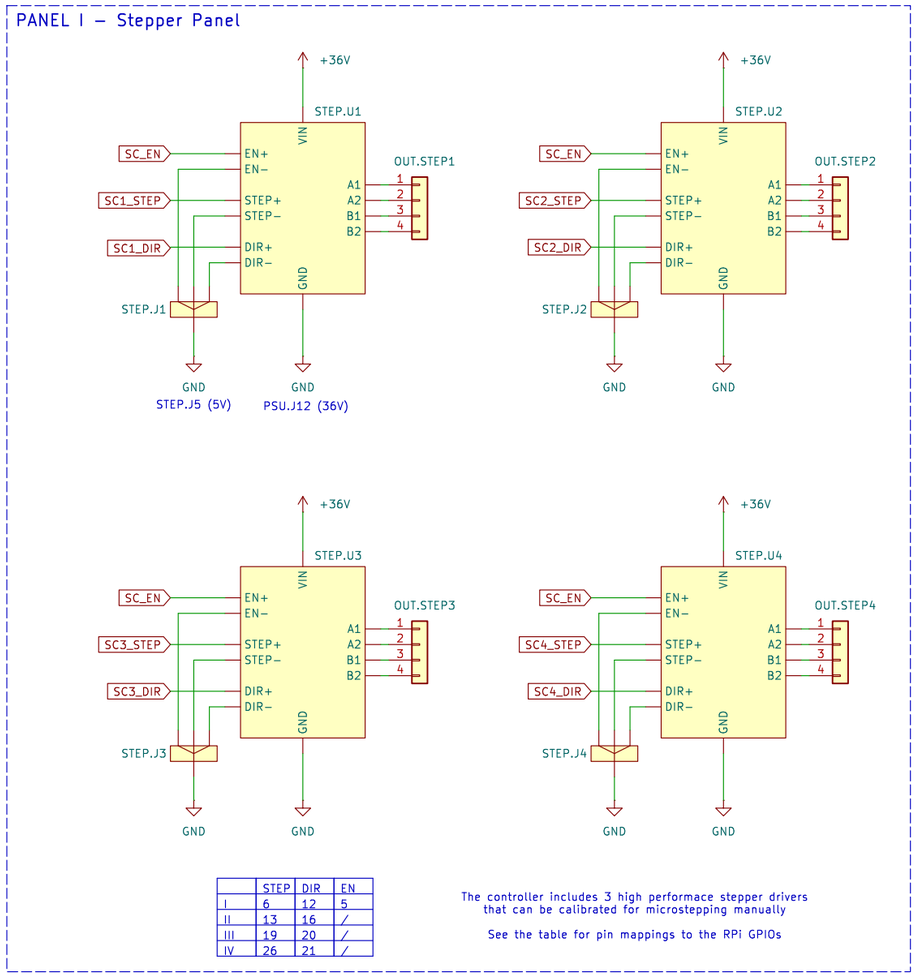

	STEP	DIR	EN
I	6	12	5
II	13	16	/
III	19	20	/
IV	26	21	/

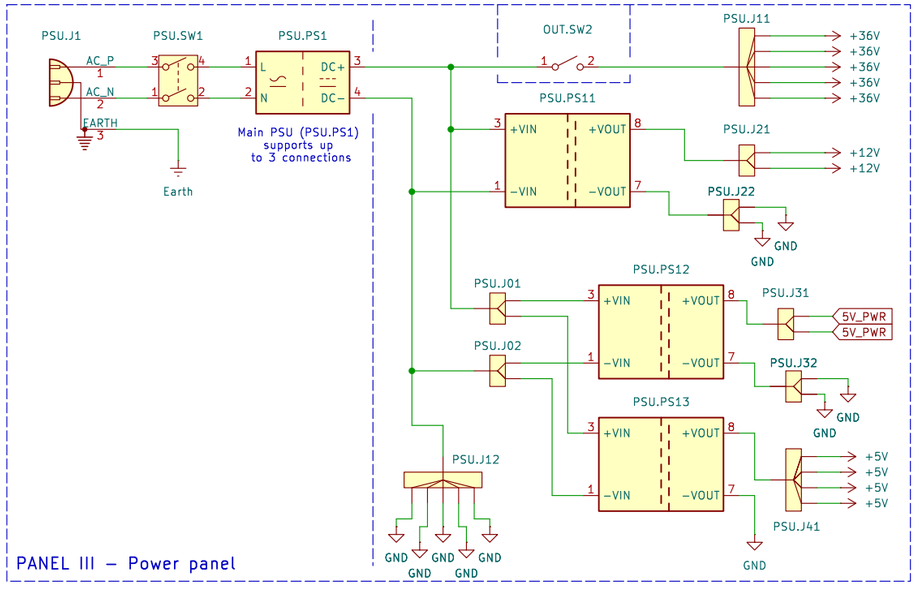

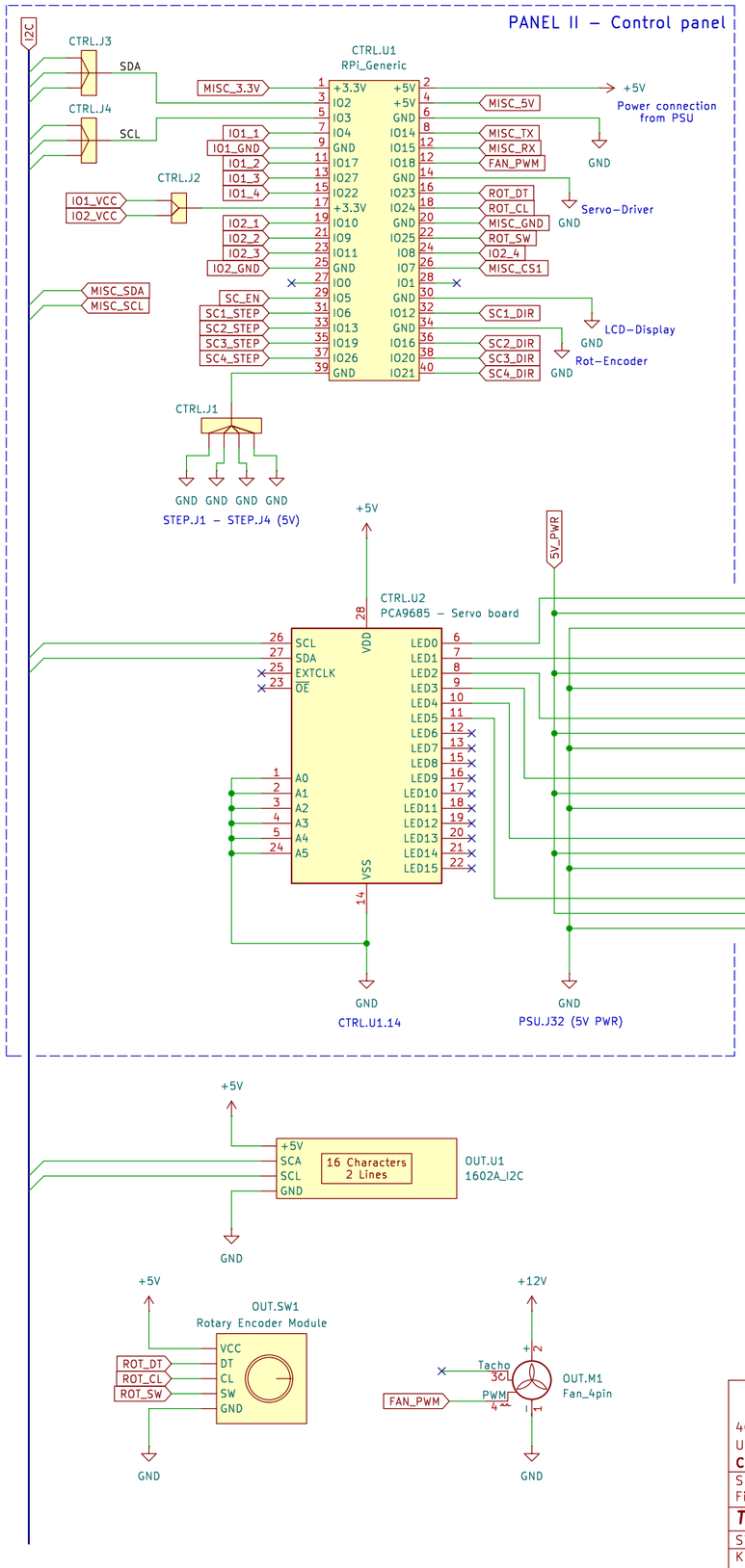

IO2 – Special functions

PIN	RPi	Special
1	+3.3V	
2	10	MOSI
3	9	MISO
4	GND	
5	–	
6	+3.3V	
7	11	SCLK
8	8	CS
9	GND	

MISC – Special functions

PIN	RPi	Special
1	+5V	
2	2	SDA
3	3	SCL
4	7	CS1
5	GND	
6	3.3V	
7	14	TX
8	15	RX
9	GND	

400W
Universal Robot Driver
CornerLab

Sheet: /
File: RDX.kicad_sch

Title: RDX – Robot Driver Mk.X

Size: A3	Date: 2026–03–01	**Rev: 1.1.0**
KiCad E.D.A. 9.0.7		Id: 1/1