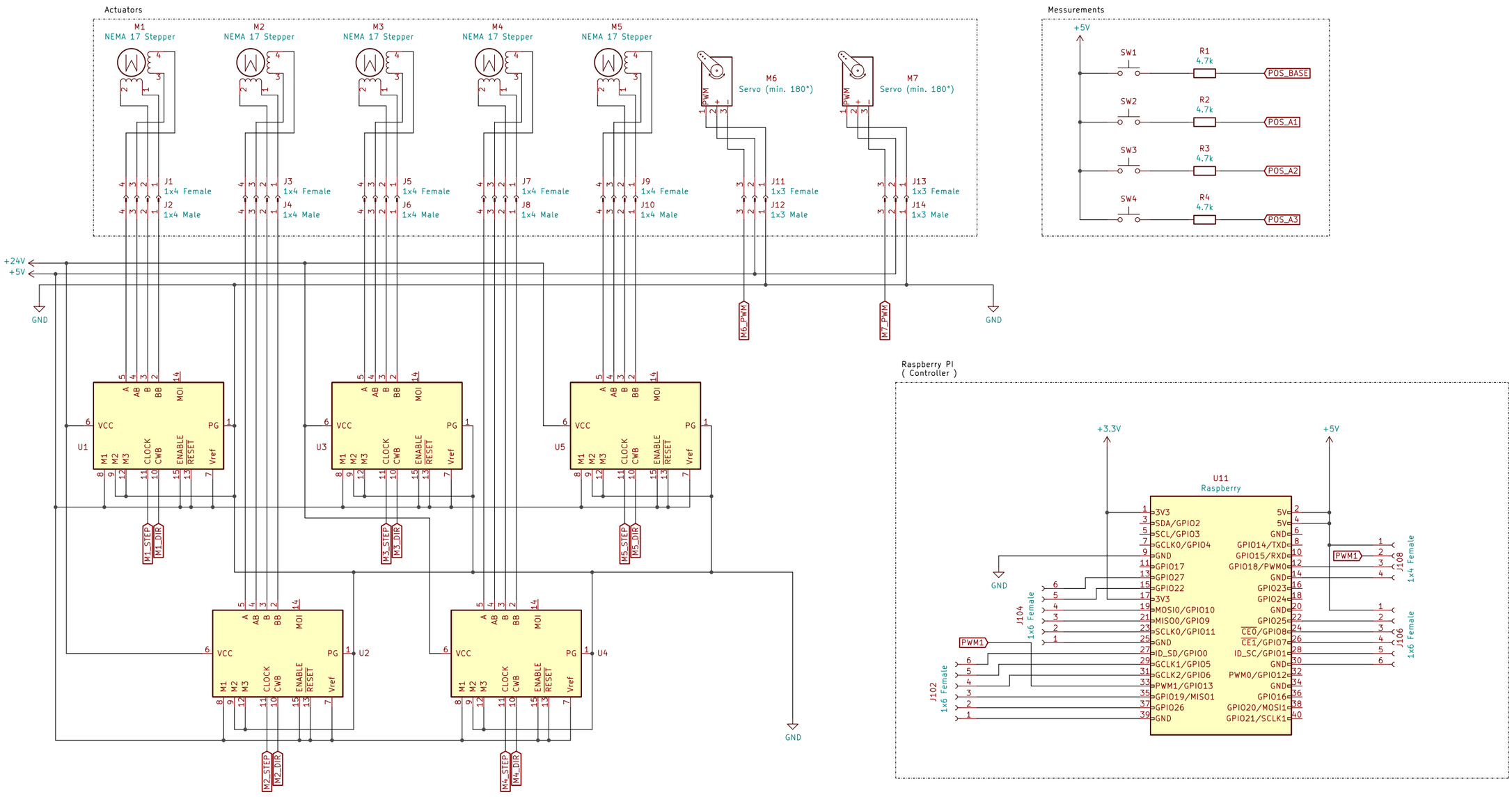

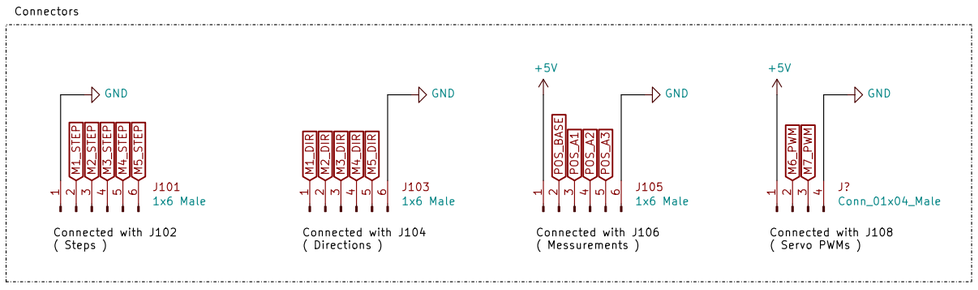

A simple circuit to control up to five stepper motors and two servos

Sheet: /
File: SimpleConnector_Mk1.sch

Title: Simple Controller Mk1

Size: A3	Date: 2022-06-28	Rev:
KiCad E.D.A. kicad (5.1.6)-1		Id: 1/1