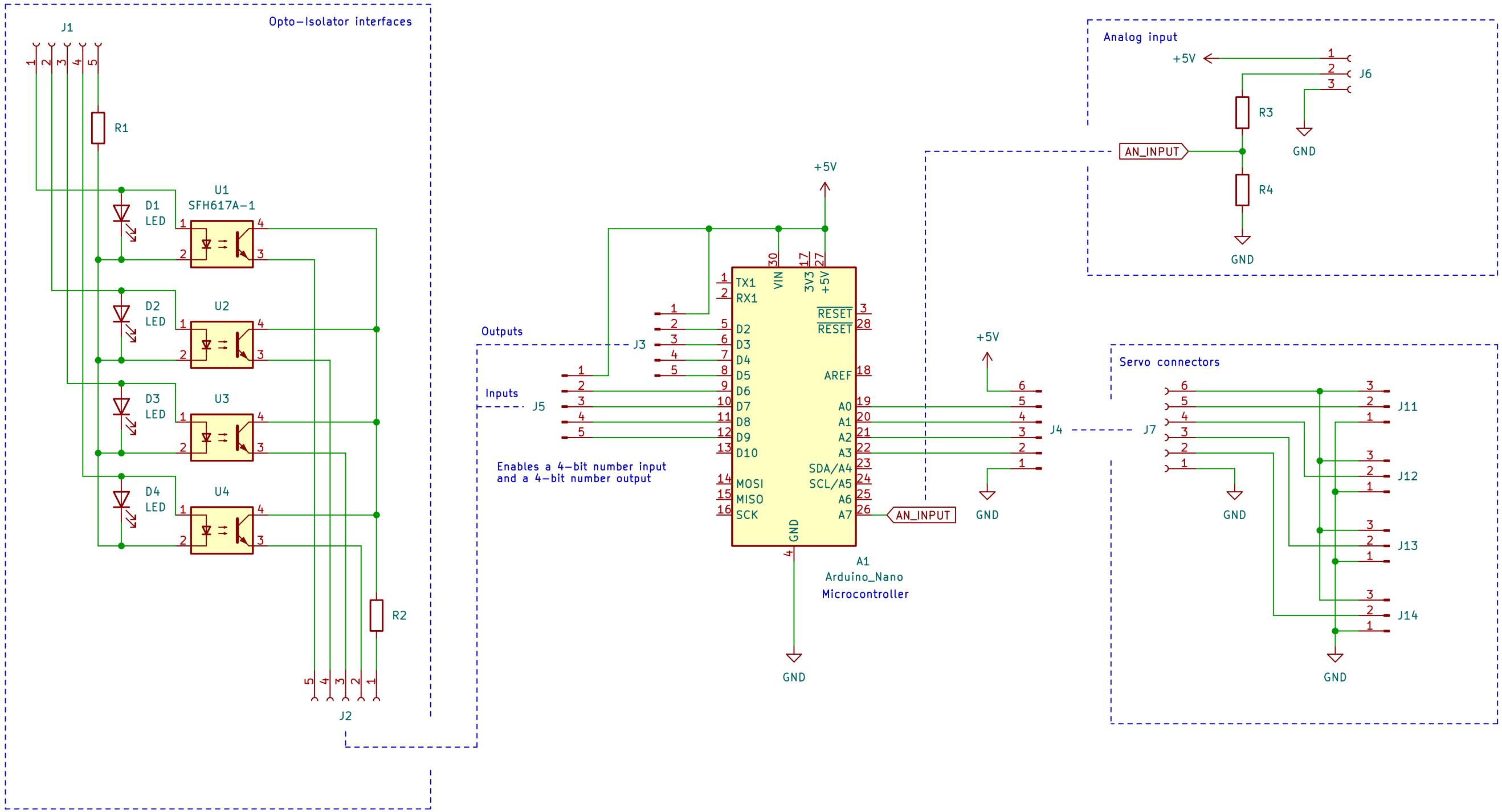

Servostation

Sheet: /
File: Servostation_Electronics.kicad_sch

Title: Servostation Electronics

Size: A4	Date: 18/01/2023	**Rev:** Mk0.1.0
KiCad E.D.A. eeschema (6.0.9)		Id: 1/1