PROVISIONAL PATENT APPLICATION

Filed under 35 U.S.C. §111(b)

1. TITLE OF THE INVENTION

Portable Open-Mask Underwater Breathing System with Mouthpiece Regulator

2. CROSS-REFERENCE TO RELATED APPLICATIONS

Not applicable. This is a standalone provisional patent application.

3. FIELD OF THE INVENTION

The present invention relates to portable underwater breathing apparatus, and more particularly to a lightweight, consumer-oriented open-mask breathing system with an integrated mouthpiece regulator designed for recreational shallow-water use by non-certified users. The invention is classified within the field of underwater breathing apparatus (IPC: B63C 11/02) and personal diving equipment.

4. BACKGROUND OF THE INVENTION

Recreational exploration of underwater environments has historically been limited by the complexity, cost, and training requirements associated with existing breathing apparatus. The following deficiencies exist in the prior art:

Traditional self-contained underwater breathing apparatus (SCUBA) requires formal certification through organizations such as PADI (Professional Association of Diving Instructors) or SSI (Scuba Schools International). A complete SCUBA system, comprising buoyancy compensator, regulator set, tank, wetsuit, and accessories, typically weighs between 15 and 25 kilograms and costs between $1,500 and $5,000. This equipment burden and training requirement excludes the vast majority of casual ocean enthusiasts from underwater exploration beyond breath-hold capabilities.

Existing portable underwater breathing devices, such as those marketed by SMACO and DEDEPU, provide small compressed air cylinders (typically 0.5 to 1.0 liters) with basic regulator assemblies. However, these systems require the user to hold a separate mouthpiece in one hand while wearing a separate dive or snorkel mask. This two-component approach presents several disadvantages: (a) the user must continuously grip the mouthpiece regulator,

occupying one hand; (b) there is no integration between the breathing apparatus and the vision system, requiring the user to manage two separate pieces of equipment; (c) the mouthpiece can easily be dislodged during active swimming, creating a safety concern; and (d) the overall user experience is cumbersome and unintuitive for non-divers.

Full-face snorkel masks designed for recreational surface use (such as the Tribord Easybreath and similar products) provide an integrated mask-and-breathing solution, but these devices are designed exclusively for surface snorkeling. They do not accept compressed air input and cannot provide underwater breathing capability. Furthermore, reported safety concerns with CO2 buildup in some full-face snorkel designs have limited their adoption.

Professional full-face diving masks (such as those manufactured by Kirby Morgan, Ocean Technology Systems, and Interspiro) do provide integrated mask-and-breathing functionality with compressed air. However, these systems are designed for commercial, military, and technical diving applications. They typically weigh 800 to 1,800 grams for the mask alone, cost $1,500 to $4,000 or more, and are engineered for working depths of 30 to 300+ meters — far exceeding the needs of recreational shallow-water users.

Accordingly, there exists a significant unmet need in the market for an integrated underwater breathing and vision system that: (a) combines mask and breathing apparatus into a single, cohesive system; (b) interfaces with widely available mini compressed air tanks; (c) requires no dive certification or specialized training; (d) weighs under 900 grams excluding tank; (e) is priced accessibly for the consumer market; and (f) is designed specifically for casual shallow-water exploration at depths of 1 to 5 meters. The present invention addresses this gap.

5. SUMMARY OF THE INVENTION

The present invention provides a portable underwater breathing system comprising the following principal components:

• An open-frame dive mask (10) with a tempered glass dual-lens visor (12) and a medical-grade liquid silicone rubber face seal (14);

• A low-profile mouthpiece regulator assembly comprising a second-stage demand regulator (28) integrated with an orthodontic-style mouthpiece (24) via a flexible corrugated breathing tube (26);

• Compatibility with standard commercially available 0.5-liter mini compressed air tanks (36) operating at pressures up to 3,000 PSI (200 bar);

• A tank retention system allowing the compressed air tank to be held by hand or mounted to the user's body via an optional waist belt harness (described in a related provisional application);

• A total dry weight under 900 grams excluding the compressed air tank;

• An open-mask breathing architecture wherein the user inhales through the mouthpiece and exhales through the nose or around the mouthpiece, with exhaled air exiting naturally through the unsealed lower portion of the mask;

• No dive certification required for intended shallow-water recreational use at depths of 1 to 5 meters.

In one embodiment, the system is configured such that the mask is worn on the user's face in the conventional manner, the breathing tube routes from the regulator mounted on the tank to the mouthpiece positioned within the mask frame, and the user holds the tank in one hand during use. In an alternative embodiment, the tank is mounted to the user's waist via an optional body-mounted harness system, freeing both hands for swimming, photography, or other activities.

6. DETAILED DESCRIPTION OF THE INVENTION

The following detailed description refers to the accompanying drawings, which form a part hereof. Like reference numerals refer to like elements throughout the several views. The description provides specific details for a thorough understanding of the invention, but it will be understood by those skilled in the art that the invention may be practiced without these specific details.

6.1 Open-Frame Mask Assembly

Referring to FIGS. 1 and 4, the mask assembly (10) comprises a rigid frame constructed from injection-molded polycarbonate (PC). The frame defines a low-profile housing that conforms to the facial geometry of the intended user population. The frame is configured to receive two tempered glass lenses (12) in a dual-lens configuration, with a central nose bridge (58) separating the left and right viewing areas.

Each lens (12) is constructed from tempered soda-lime glass conforming to EN 16805 or equivalent safety standards. The lenses are set into the frame via compression-fit silicone gaskets that provide a watertight seal while allowing lens replacement for maintenance. An anti-fog hydrophilic coating is applied to the interior surface of each lens to minimize condensation during use.

A face seal (14) constructed from medical-grade liquid silicone rubber (LSR, durometer Shore A 30–40) is bonded to the perimeter of the mask frame. The face seal is anatomically contoured to conform to the orbital, nasal, and cheek regions of the face, providing a comfortable watertight seal across a range of facial geometries. The LSR material is hypoallergenic, resistant to UV degradation, and maintains elasticity across a temperature range of -20°C to +60°C.

A nose pocket (16) is integrated into the face seal, extending inward from the lower-central portion of the seal. The nose pocket allows the user to pinch the nose through the soft silicone material, enabling Valsalva maneuver equalization of middle ear pressure during descent. The nose pocket volume is approximately 15 to 25 mL.

Strap attachment points (18) are molded into the left and right lateral aspects of the mask frame. Each attachment point comprises a slot-and-tab connector configured to receive the head strap (20). The head strap (20) is constructed from medical-grade silicone rubber and is adjustable in length to accommodate head circumferences from approximately 52 cm to 62 cm. A quick-release buckle (22) is positioned at the rear of the head strap, enabling single-hand removal of the mask in emergency situations.

A breathing tube entry point (56) is located at the lower-central portion of the mask frame. This port is configured to receive the proximal end of the breathing tube (26) and route it to the mouthpiece (24) position within the interior of the mask frame. The open-mask design means the mask frame does not create an airtight seal around the mouth — the lower portion of the mask remains open to allow natural exhale path for exhaled air (38) to exit as bubbles.

Materials: Polycarbonate frame (PC, Makrolon or equivalent), tempered soda-lime glass lenses, LSR face seal (Wacker Elastosil or equivalent), silicone rubber head strap, Delrin or stainless steel buckle hardware.

Total mask weight: Approximately 180 to 250 grams, depending on configuration.

6.2 Mouthpiece Regulator System

Referring to FIGS. 1 and 3, the mouthpiece regulator system comprises a second-stage demand regulator (28), a flexible corrugated breathing tube (26), and an orthodontic-style mouthpiece (24).

The second-stage demand regulator (28) is a balanced diaphragm type regulator configured to deliver air on demand in response to the user's inhalation effort. The regulator body is constructed from glass-reinforced nylon (PA66-GF30) for corrosion resistance and lightweight performance. Internal components, including the demand lever (42), valve seat (44), and associated springs, are constructed from chrome-plated brass or marine-grade stainless steel (316L).

The regulator operates on the balanced downstream principle. When the user inhales, reduced pressure in the air flow chamber (54) causes the diaphragm (40) to deflect inward, actuating the demand lever (42), which opens the valve seat (44) to admit air from the intermediate-pressure supply. When the user ceases inhalation, the spring bias returns the diaphragm and lever to the closed position, stopping airflow. This demand-actuated delivery system optimizes air consumption by delivering air only when the user is actively inhaling.

A purge button (30) is positioned on the front face of the regulator body. When depressed, the purge button manually deflects the diaphragm (40), opening the valve seat (44) and allowing a free flow of air into the breathing chamber. This purge function allows the user to clear water from the regulator housing and breathing tube without inhalation effort.

The regulator is compatible with standard CGA-346 (yoke) or DIN 300 (G5/8″ thread) first-stage connections via a low-pressure (LP) hose port (46). Operating parameters are as follows:

• Intermediate pressure input: 125–150 PSI (8.5–10.3 bar) from first-stage regulator

• Breathing resistance: target less than 1.2 joules per liter at 10-meter depth equivalent

• Maximum operating depth: 10 meters (33 feet) — intended use range: 1 to 5 meters

• Free-flow rate on purge: minimum 400 liters per minute at surface

The flexible corrugated breathing tube (26) connects the LP hose port (46) of the regulator to the tube connector (52) at the mask entry point. The tube is constructed from medical-grade silicone rubber with corrugated walls for flexibility without kinking. The tube length is approximately 30 to 45 centimeters, providing sufficient reach for the user to hold the tank at

waist or arm level while wearing the mask on the face. The interior diameter of the tube is approximately 22 millimeters, providing low breathing resistance.

The mouthpiece (24) is constructed from medical-grade silicone rubber in an orthodontic bite-tab configuration. Upper and lower bite flanges (48) allow the user to grip the mouthpiece with the teeth, while a lip flange (50) creates a comfortable seal against the inner surface of the lips. The mouthpiece is connected to the breathing tube via the tube connector (52) and is positioned within the open area of the mask frame, below the nose pocket (16). The user breathes by inhaling through the mouthpiece and exhaling through the nose (with exhaled air exiting the open lower portion of the mask) or around the mouthpiece.

6.3 Tank Interface

Referring to FIGS. 1 and 2, the system is configured to interface with commercially available 0.5-liter aluminum compressed air cylinders (36). These cylinders are widely available from manufacturers including SMACO and DEDEPU, and are typically pre-certified to DOT (Department of Transportation) and/or CE (Conformité Européenne) standards for compressed gas containers.

The tank (36) connects to a first-stage regulator (32) via standard M18×1.5 thread connection (34) at the tank valve. The first-stage regulator (32) reduces tank pressure from the storage pressure of up to 3,000 PSI (200 bar) to the intermediate pressure of 125–150 PSI required by the second-stage demand regulator (28).

A single 0.5-liter tank at 3,000 PSI provides approximately 250 liters of air at surface pressure. At shallow depths (1–5 meters) with normal breathing rates of approximately 15–20 liters per minute, this provides approximately 5 to 10 minutes of breathing time. Breathing duration varies with depth, water temperature, exertion level, and individual physiology.

It is expressly noted that the compressed air tank itself is NOT part of the present invention. The tank is a commercially available, independently certified pressure vessel. The present invention relates to the integrated mask, regulator, and breathing tube system that interfaces with such tanks.

6.4 System Integration and Method of Use

Referring to FIG. 2, the complete system is used as follows:

Step 1: The user dons the mask (10) by placing it over the eyes and nose, pressing the face seal (14) against the skin to establish a watertight seal, and adjusting the head strap (20) for a snug but comfortable fit.

Step 2: The user places the mouthpiece (24) between the teeth, biting gently on the bite flanges (48) and sealing the lips around the lip flange (50).

Step 3: The user opens the valve on the compressed air tank (36), pressurizing the first-stage regulator (32) and LP hose.

Step 4: The user holds the tank (36) in one hand (or mounts it to an optional body harness) and enters the water.

Step 5: During submersion, the user inhales through the mouthpiece (24). The demand regulator (28) delivers air on each inhalation. The user exhales through the nose; exhaled air exits through the open lower area of the mask frame and rises as bubbles (38) to the surface.

Step 6: When the air supply is depleted, the user surfaces normally. The mask provides clear vision during ascent. The user can continue to breathe naturally through the nose once at the surface with the lower mask area above water.

The open-mask architecture provides a critical safety advantage: in the event of regulator malfunction or air depletion, the user can immediately breathe normally through the nose (at surface) or hold breath and ascend safely from shallow depth. There is no sealed airspace trapping the user's face, as would be the case with a full-face sealed mask.

7. BRIEF DESCRIPTION OF THE DRAWINGS

FIG. 1 is an exploded isometric view showing all major components of the portable open-mask underwater breathing system in spatial alignment, including the mask assembly (10), head strap (20), mouthpiece (24), breathing tube (26), second-stage regulator (28), first-stage regulator (32), and compressed air tank (36).

FIG. 2 is a side profile view of the complete system as worn on a user's head, showing the mask (10) on the face, the breathing tube (26) routing from the regulator assembly to the mouthpiece (24), and the tank (36) held in the user's hand, with exhaled bubbles (38) shown exiting the open mask area.

FIG. 3 is a cross-section detail view of the mouthpiece regulator assembly, showing the diaphragm (40), demand lever (42), valve seat (44), purge button (30), LP hose port (46), mouthpiece (24) with bite flanges (48) and lip flange (50), tube connector (52), and air flow chamber (54).

FIG. 4 is a front view of the mask assembly showing the dual-lens configuration (12), face seal perimeter (14), nose pocket (16), strap attachment points (18), breathing tube entry point (56), and nose bridge (58).

8. ABSTRACT

A portable underwater breathing system comprising an open-frame dive mask with a dual-lens tempered glass visor and silicone face seal, integrated with a mouthpiece-style second-stage demand regulator via a flexible breathing tube. The system interfaces with commercially available 0.5-liter compressed air mini tanks to provide short-duration underwater breathing capability for recreational shallow-water use without requiring dive certification. The open-mask design allows a natural exhale path while the demand regulator delivers air only on inhalation, optimizing air consumption. Total system weight excluding tank is under 900 grams.

INVENTOR

Samuel D’Agostino

Miami, Florida, United States

DISCLAIMER

This provisional patent application establishes a filing date and priority for the described invention. It does not constitute a granted patent. A corresponding non-provisional utility patent application must be filed within twelve (12) months of this provisional filing date to preserve the priority date.

DRAWINGS

FIG. 1

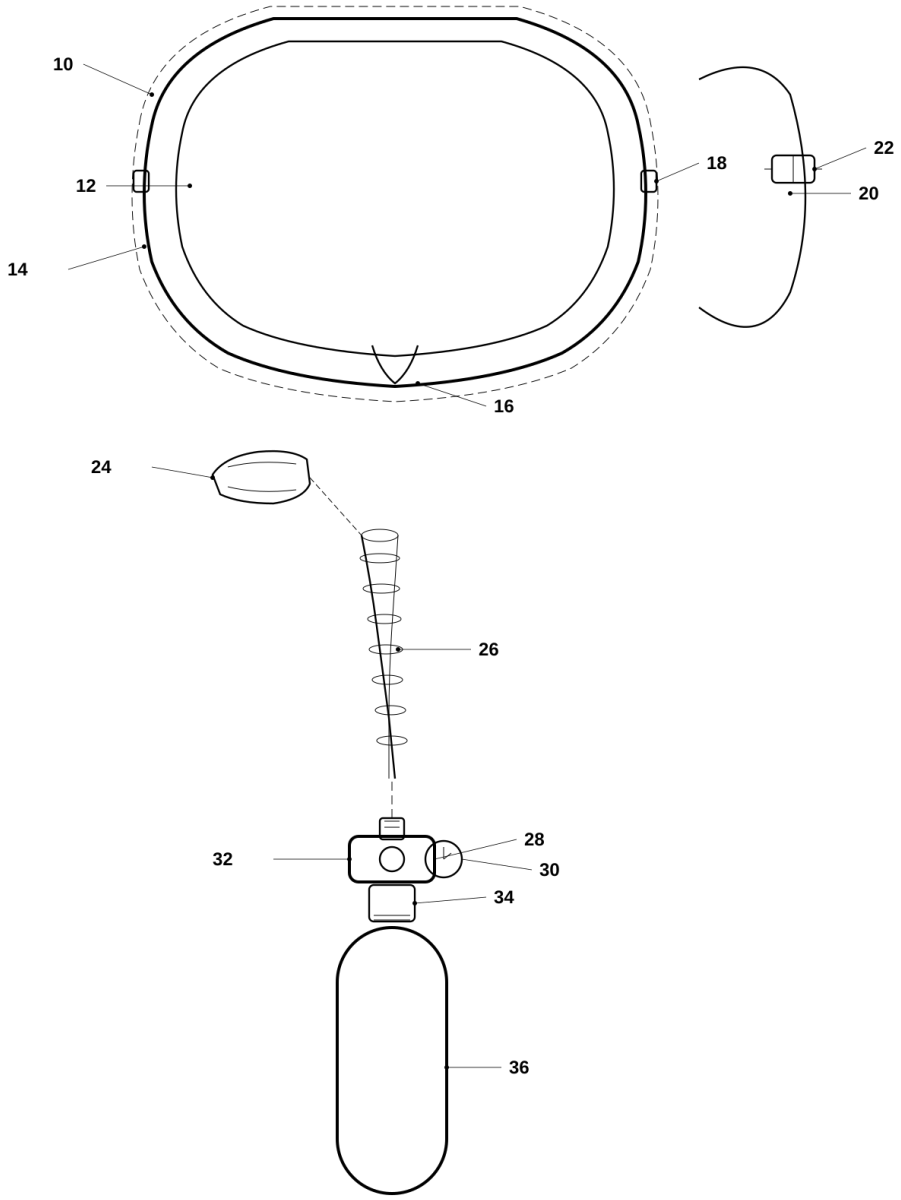

Reference Numerals:
10 — Mask assembly | 12 — Panoramic lens | 14 — Silicone face seal | 16 — Nose pocket
18 — Strap attachment points | 20 — Head strap | 22 — Quick-release buckle | 24 — Mouthpiece
26 — Breathing tube (corrugated) | 28 — Regulator body | 30 — Pressure gauge | 32 — First-stage regulator
34 — Tank valve connection (M18x1.5) | 36 — 0.5L compressed air tank

FIG. 1 — Exploded Isometric View of AquaPulse System

FIG. 2

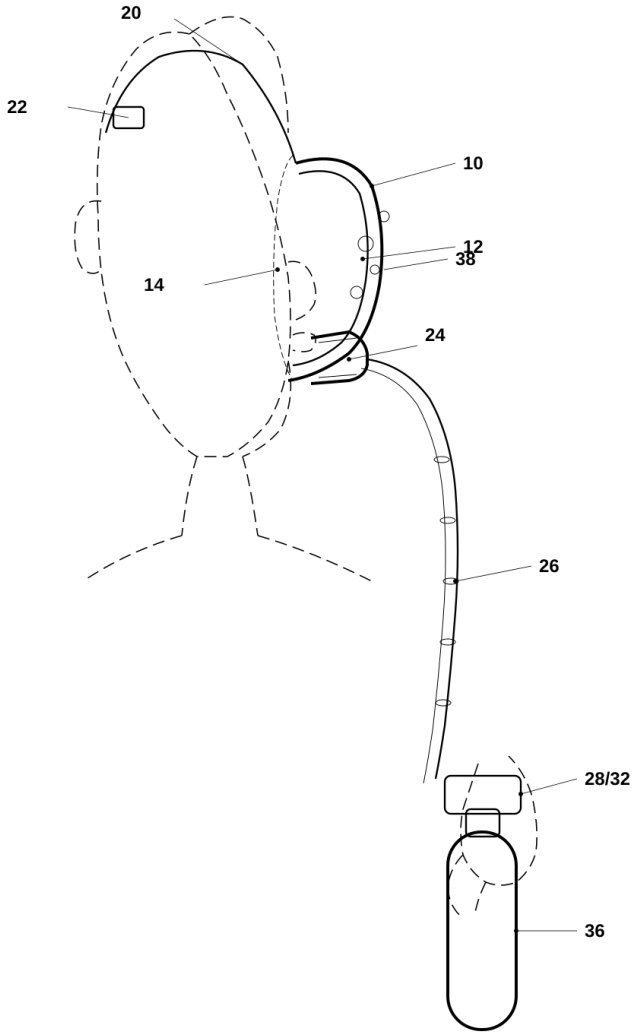

Reference Numerals:
10 — Mask assembly | 12 — Visor | 14 — Face seal | 20 — Head strap | 22 — Buckle
24 — Mouthpiece | 26 — Breathing tube | 28/32 — Regulator/first-stage | 36 — Tank | 38 — Exhaled bubbles

FIG. 2 — Side Profile View (System Worn by User)

FIG. 3

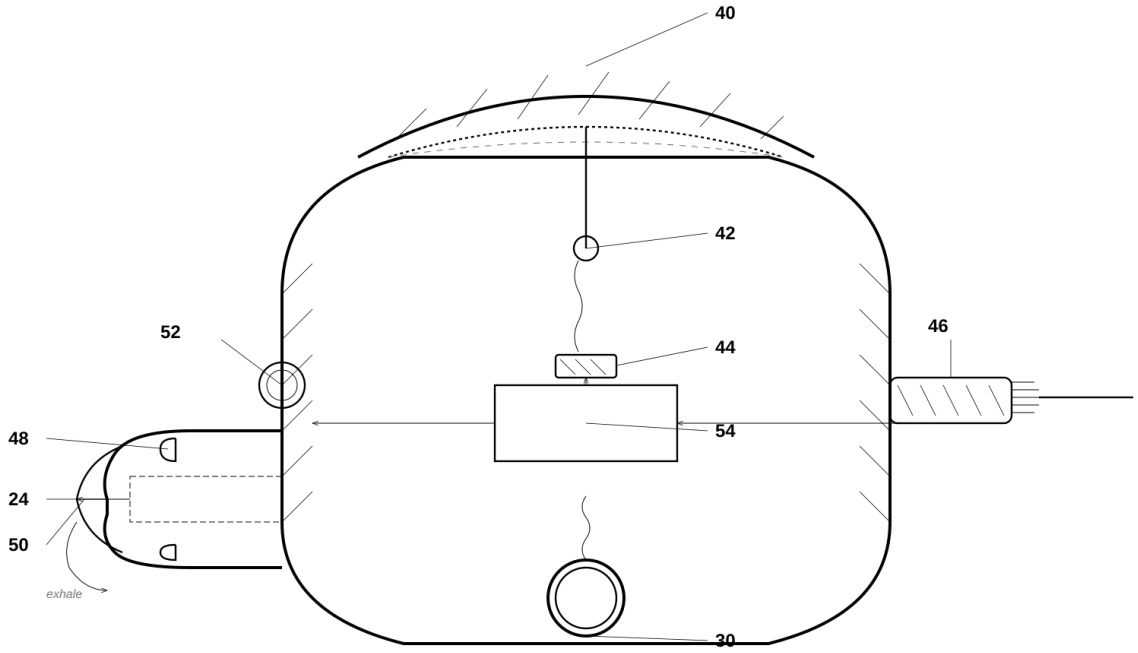

Reference Numerals:
24 — Mouthpiece | 30 — Purge button | 40 — Diaphragm | 42 — Demand lever | 44 — Valve seat
46 — LP hose port | 48 — Bite flanges | 50 — Lip flange | 52 — Tube connector | 54 — Air flow chamber

FIG. 3 — Cross-Section Detail of Mouthpiece Regulator Assembly

FIG. 4

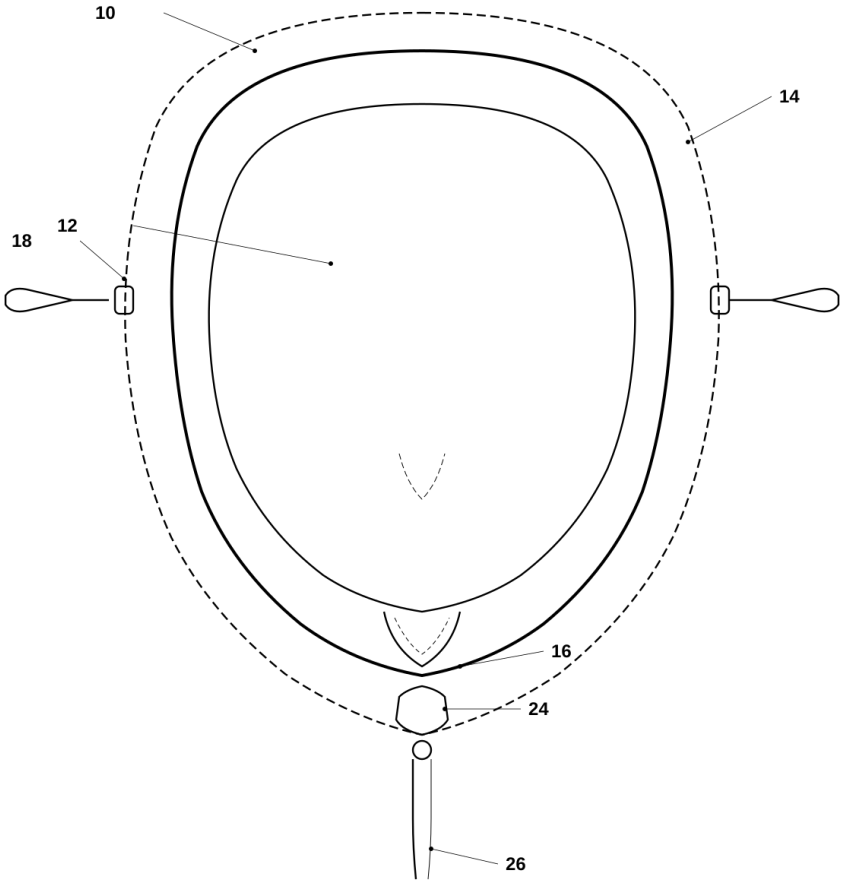

Reference Numerals:
10 — Mask frame | 12 — Single panoramic lens | 14 — Silicone face seal (dashed) | 16 — Nose pocket
18 — Strap attachment points | 24 — Mouthpiece | 26 — Breathing tube entry

FIG. 4 — Front View of Mask Assembly