PROVISIONAL PATENT APPLICATION

Filed under 35 U.S.C. §111(b)

1. TITLE OF THE INVENTION

Dual-Tank Body-Mounted Harness System for Portable Underwater Breathing Apparatus

2. CROSS-REFERENCE TO RELATED APPLICATIONS

This application is related to a co-pending provisional patent application entitled "Portable Open-Mask Underwater Breathing System with Mouthpiece Regulator" (the "AquaPulse" system) by the same inventor. The present harness system is designed to be used in conjunction with the AquaPulse breathing system, although it may also be used with other compatible portable underwater breathing apparatus.

3. FIELD OF THE INVENTION

The present invention relates to wearable body-mounted harness systems for portable underwater breathing apparatus, and more particularly to a lightweight waist-belt harness with dual tank cradles and an integrated Y-valve manifold for hands-free use of mini compressed air cylinders during recreational underwater activities.

4. BACKGROUND OF THE INVENTION

Existing portable underwater breathing devices that utilize small compressed air cylinders (typically 0.5 to 1.0 liters) require the user to hold the air tank by hand during use. This hand-held requirement presents significant limitations:

• One hand is permanently occupied holding the tank, reducing the user's ability to swim efficiently, operate a camera, hold objects, or maintain balance underwater.

• Users who wish to document their underwater experience (a rapidly growing demographic of content creators) cannot simultaneously hold a tank and operate recording equipment.

• Hand fatigue during extended use limits practical dive duration below the actual air supply capacity.

• A dropped tank may be difficult to retrieve, creating both an inconvenience and a potential safety hazard.

Traditional scuba buoyancy compensator devices (BCDs) do provide body-mounted tank carrying capability. However, BCDs are designed for full-size scuba tanks (11 to 15 liters), typically weigh 3 to 5 kilograms, cost $300 to $800, and include buoyancy compensation bladders and associated inflation/deflation mechanisms that are unnecessary for shallow-water recreational use with mini tanks. No BCD or harness product exists that is purpose-designed for the mounting of one or two 0.5-liter mini compressed air cylinders.

Furthermore, no existing consumer product provides a manifold system that connects two mini tanks to a single regulator, enabling extended dive duration with automatic tank switching. Users of existing portable systems are limited to the air supply of a single tank per dive, typically 5 to 10 minutes.

Accordingly, there exists a need for a lightweight, purpose-built body harness that: (a) mounts one or two 0.5-liter mini tanks on the user's waist; (b) provides a manifold connection allowing both tanks to feed a single regulator; (c) frees both hands for swimming, photography, and exploration; (d) enables emergency doffing in under three seconds; and (e) weighs under 500 grams. The present invention addresses this need.

5. SUMMARY OF THE INVENTION

The present invention provides a wearable harness system comprising the following principal components:

• An adjustable waist belt (102) constructed from 50mm marine-grade webbing with neoprene comfort padding (116) and a quick-release buckle (100);

• Two injection-molded tank cradles (108), each configured to receive a standard 0.5-liter compressed air cylinder (110) via a snap-lock retention mechanism (104) with a release tab (122);

• A Y-valve manifold (112) with dual input ports (130, 136), integrated check valves (132), and a single output port (138), allowing simultaneous connection of two tanks to a single breathing regulator;

• An optional thigh strap (114) for stability during active swimming;

• Total dry weight of approximately 400 grams;

• Emergency doffing capability: complete system separation in under three seconds via quick-release buckle and tank release tabs.

6. DETAILED DESCRIPTION OF THE INVENTION

The following detailed description refers to the accompanying drawings (FIGS. 1–5), which form a part hereof. Like reference numerals refer to like elements throughout the several views.

6.1 Waist Belt Assembly

Referring to FIGS. 1 and 4, the waist belt (102) comprises a 50-millimeter (2-inch) wide belt constructed from high-tenacity polyester or nylon webbing rated for a minimum tensile strength of 500 kg. The belt is adjustable from 60 centimeters to 130 centimeters in circumference, accommodating waist sizes from approximately 24 inches to 52 inches.

A quick-release buckle (100) is positioned at the front center of the belt. The buckle is constructed from marine-grade 316 stainless steel or engineering-grade Delrin (polyoxymethylene) for corrosion resistance in saltwater environments. The buckle mechanism is a side-squeeze release type, operable with one hand, requiring a deliberate two-point squeeze to release — preventing accidental opening during use while enabling rapid emergency doffing.

Neoprene comfort padding (116) lines the interior contact surface of the belt in the areas that contact the user's body. The padding comprises 3-millimeter closed-cell neoprene bonded to the interior face of the webbing. The closed-cell construction prevents water absorption, which would add weight during use.

Two D-ring attachment points (106) are sewn into the belt at the 10 o'clock and 2 o'clock positions (relative to the front buckle). These D-rings provide accessory mounting points for equipment clips, safety lanyards, or additional accessories. The D-rings are constructed from 316 stainless steel wire, 4mm gauge, with a working load limit of 50 kg each.

Weight: Approximately 120 grams (belt assembly including buckle, padding, and D-rings).

6.2 Tank Cradle System

Referring to FIGS. 1, 2, and 5, each tank cradle (108) is an injection-molded component constructed from glass-reinforced nylon (PA66-GF30, 30% glass fiber content) for high strength-to-weight ratio and corrosion resistance. Two cradles are provided, positioned on the left and right hips of the belt for balanced weight distribution.

Each cradle (108) defines a semi-cylindrical recess configured to accommodate a standard 0.5-liter aluminum compressed air cylinder having an outside diameter of approximately 63 millimeters. The recess includes two anti-rotation ridges (124) molded into the interior wall. These ridges engage longitudinal features on the tank body (such as the tank's base ring or valve assembly), preventing the tank from rotating during use.

A snap-lock retention mechanism (104) is integrated into the upper portion of each cradle. The mechanism comprises a spring-loaded latch that engages the tank's neck ring or base flange (126) when the tank is inserted. The spring is a stainless steel compression spring providing approximately 3 to 5 kg of retention force — sufficient to securely hold the tank during swimming and surface activities, but releasable by the user's deliberate action.

A release tab (122) is positioned on the outboard side of each cradle. When pressed inward, the release tab disengages the spring-loaded latch, allowing the tank to be removed with a downward pull. The tab requires a deliberate press-and-pull action, preventing accidental release.

Referring to FIG. 5, the tank insertion sequence is as follows: (a) the user positions the tank below the cradle with the valve end upward; (b) the user pushes the tank upward into the cradle — the spring-loaded latch contacts the tank's neck ring and begins to engage; (c) continued upward pressure seats the tank fully in the cradle, at which point the latch snaps closed with an audible click, confirming secure retention.

Each cradle is attached to the waist belt via belt mounting clips (120) that thread onto the belt webbing. The clips allow the cradle position to be adjusted along the belt for optimal fit.

Weight per cradle: Approximately 65 grams.

6.3 Y-Valve Manifold

Referring to FIG. 3, the Y-valve manifold (112) is a dual-input, single-output brass manifold that connects two tank first-stage regulators to a single breathing tube and second-stage regulator.

The manifold body is machined from marine-grade brass (CZ121 or equivalent) and comprises: two input ports (130, 136) each having standard M18×1.5 internal threads for connection to standard first-stage regulator LP hose outputs; a central merge chamber (134) where air from both inputs converges; and a single output port (138) with a standard LP hose connection for routing to the breathing regulator.

Critically, each input port incorporates an integrated check valve (132). Each check valve comprises a spring-loaded ball or poppet valve that permits airflow from the input port into the central merge chamber but prevents reverse flow from the merge chamber back through the input port. These check valves serve two essential functions:

• When one tank is depleted before the other, the check valve on the depleted side prevents air from the full tank from flowing backward through the manifold and out through the depleted tank's regulator.

• When the manifold is used in single-tank mode (one tank connected, one port empty), the check valve on the empty port seals that port, preventing air loss.

In dual-tank operation, the manifold enables sequential depletion: the user breathes normally, drawing air from whichever tank has higher intermediate pressure. As the first tank depletes, intermediate pressure drops, and airflow automatically transitions to the second tank. This transition is seamless and requires no user action.

Weight: Approximately 85 grams.

6.4 Thigh Strap (Optional)

Referring to FIGS. 1 and 4, an optional thigh strap (114) is provided. The thigh strap comprises a single adjustable strap constructed from 25-millimeter webbing that loops from the waist belt to the upper thigh of the user. The strap prevents the waist belt from riding upward during vigorous kicking or inverted swimming positions.

The thigh strap incorporates a quick-release buckle for emergency removal. The strap is adjustable in length and can be worn on either leg or omitted entirely based on user preference and activity level.

Weight: Approximately 30 grams.

6.5 System Integration and Method of Use

Referring to FIGS. 1 and 4, the complete harness system is used as follows:

Step 1: The user wraps the waist belt (102) around the natural waistline and secures the quick-release buckle (100).

Step 2: One or two 0.5-liter compressed air tanks (110) are inserted into the cradles (108) using the snap-lock mechanism as described in Section 6.2 and FIG. 5.

Step 3: First-stage regulators on each tank are connected to the Y-valve manifold (112) input ports via standard LP hoses.

Step 4: The manifold output port (138) is connected to the breathing tube of the AquaPulse system (or compatible breathing apparatus) via a standard LP hose.

Step 5: The user opens both tank valves and enters the water.

Step 6: During diving, the user breathes normally. With two tanks at 3,000 PSI, total air supply is approximately 500 liters at surface pressure, providing approximately 10 to 20 minutes of breathing time at shallow depth.

Step 7: Emergency doffing: In any emergency, the user presses the belt buckle (100) to release the belt. Both tank release tabs (122) can be pressed simultaneously to separate the tanks from the cradles. Complete system separation is achievable in under three seconds.

7. BRIEF DESCRIPTION OF THE DRAWINGS

FIG. 1 is a front view of the complete HydroHarness system as worn on a user's torso, showing the waist belt (102), quick-release buckle (100), left and right tank cradles (108), tanks (110), Y-valve manifold (112), D-ring attachments (106), and optional thigh strap (114).

FIG. 2 is an exploded view of a single tank cradle assembly showing the cradle body (108), belt mounting clips (120), spring-loaded latch (104), release tab (122), anti-rotation ridges (124), and tank (110) with neck ring (126).

FIG. 3 is a cross-section view of the Y-valve manifold showing dual input ports (130, 136), check valves (132), central merge chamber (134), and single output port (138).

FIG. 4 is a side profile view of the harness worn by a user, showing belt (102), cradle (108), tank (110), thigh strap (114), and breathing tube (140) routing.

FIG. 5 is a sequence diagram showing the tank insertion process in three stages: (a) approach, (b) engaging, (c) locked.

8. ABSTRACT

A body-mounted harness system for portable underwater breathing apparatus, comprising an adjustable waist belt with dual injection-molded tank cradles configured to receive standard 0.5-liter compressed air cylinders via a snap-lock retention mechanism. A Y-valve manifold with integrated check valves connects two tanks to a single breathing regulator, enabling extended underwater breathing duration with automatic tank switching. The system weighs approximately 400 grams dry and provides hands-free operation, with a quick-release buckle and tank release tabs enabling complete emergency doffing in under three seconds.

INVENTOR

Samuel D’Agostino

Miami, Florida, United States

DISCLAIMER

This provisional patent application establishes a filing date and priority for the described invention. It does not constitute a granted patent. A corresponding non-provisional utility patent application must be filed within twelve (12) months of this provisional filing date to preserve the priority date.

DRAWINGS

FIG. 1

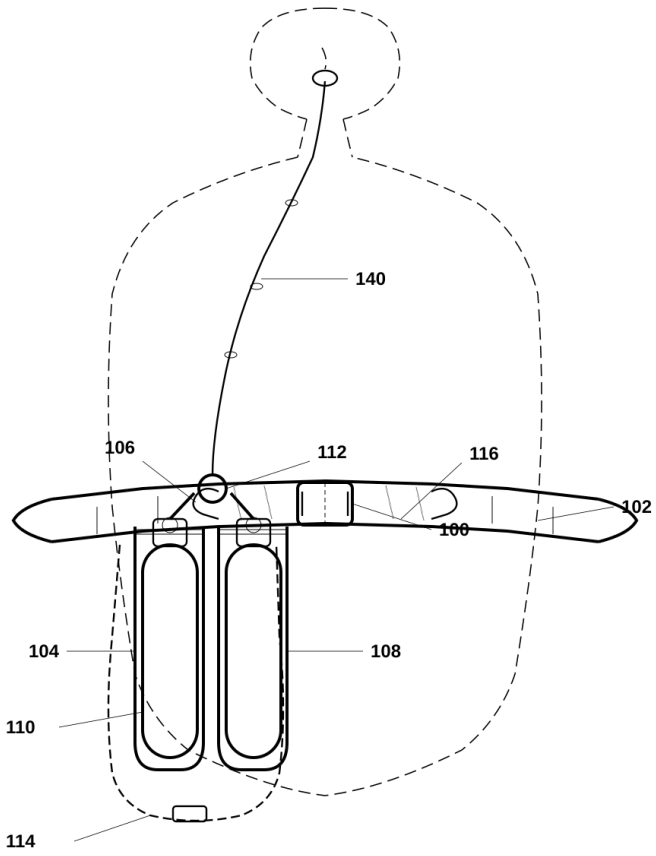

Reference Numerals:
100 — Quick-release belt buckle | 102 — Waist belt (50mm webbing) | 104 — Fabric loop retention
106 — D-ring attachment | 108 — Tank cradle (webbing loop) | 110 — 0.5L tank | 112 — Y-valve manifold
114 — Stabilizer strap (upper thigh) | 116 — Neoprene comfort padding | 140 — Breathing tube

FIG. 1 — Front View of HydroHarness (Worn by User)

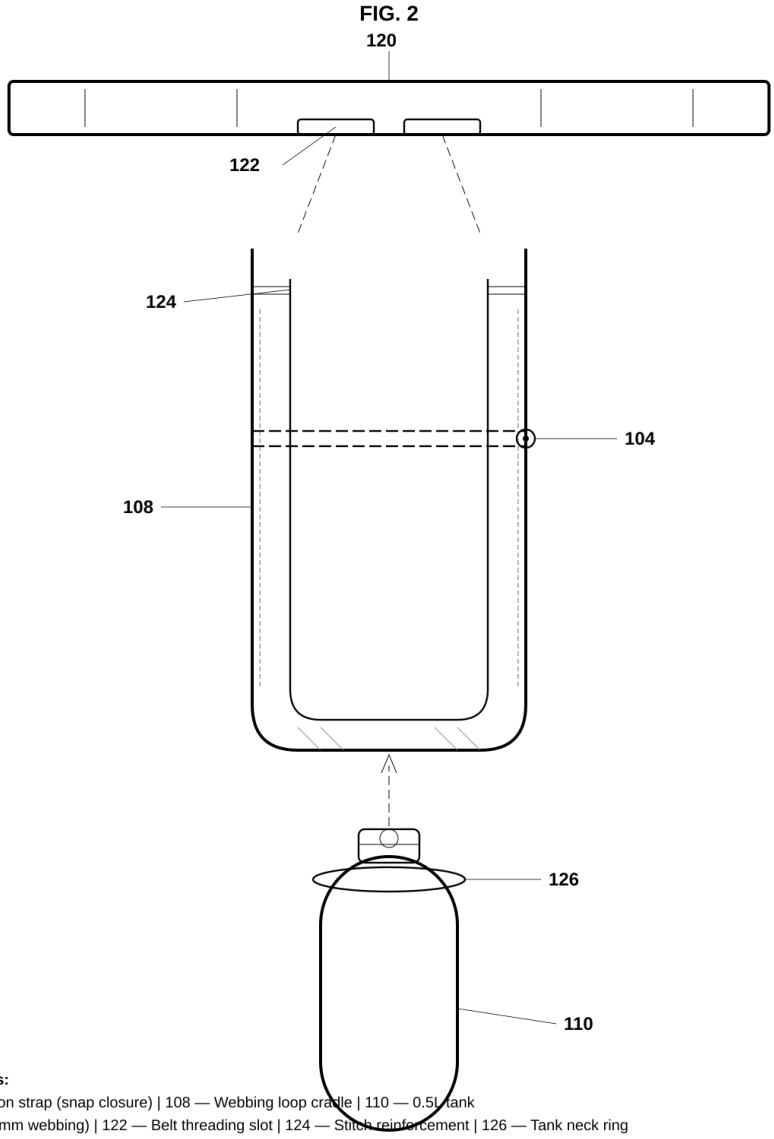

Reference Numerals:
104 — Elastic retention strap (snap closure) | 108 — Webbing loop cradle | 110 — 0.5L tank
120 — Waist belt (50mm webbing) | 122 — Belt threading slot | 124 — Stitch reinforcement | 126 — Tank neck ring

FIG. 2 — Exploded View of Tank Cradle Assembly

FIG. 3

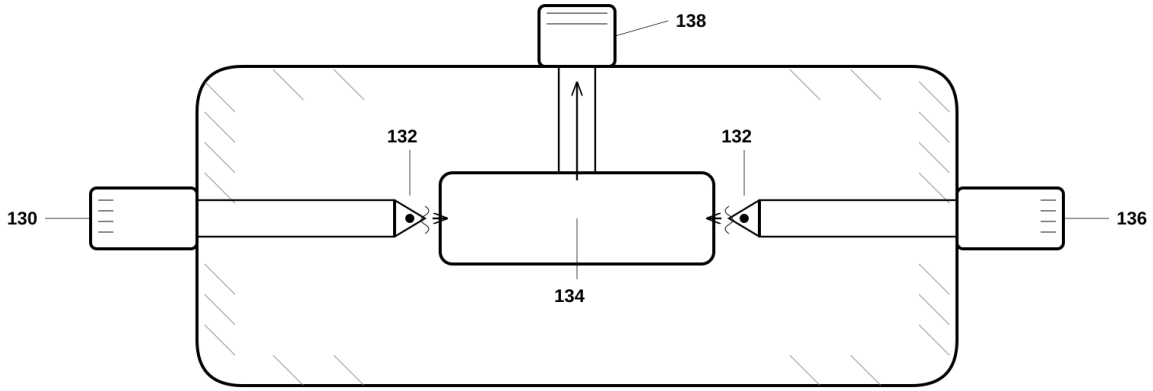

Reference Numerals:
130 — Left input port (M18x1.5, Tank 1) | 132 — Check valves (x2) | 134 — Central merge chamber
136 — Right input port (M18x1.5, Tank 2) | 138 — Single output port (to LP hose)

FIG. 3 — Cross-Section of Y-Valve Manifold

FIG. 4

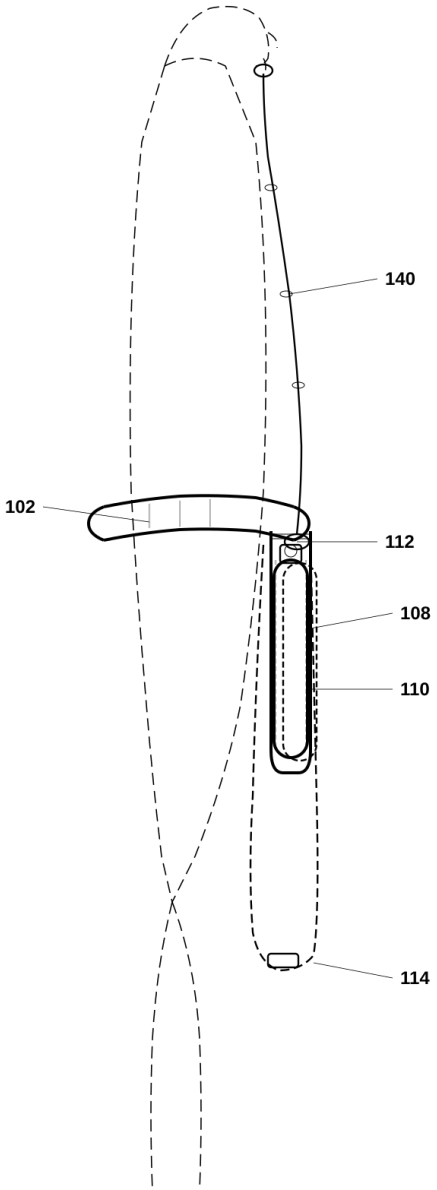

Reference Numerals:
102 — Waist belt | 108 — Tank cradle | 110 — 0.5L tank | 112 — Y-valve manifold | 114 — Thigh strap | 140 — Breathing tube

FIG. 4 — Side Profile View (Harness Worn by User)

FIG. 5

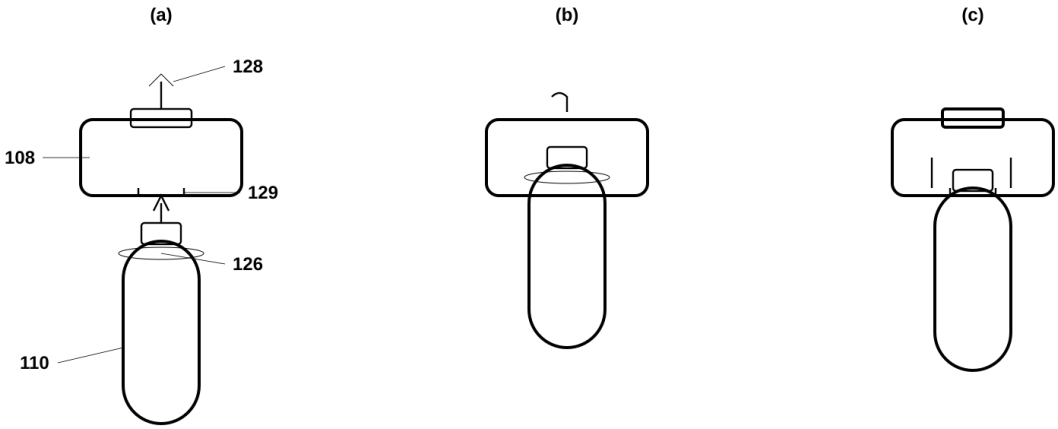

Reference Numerals:
108 — Tank cradle | 110 — 0.5L tank | 126 — Tank neck ring | 128 — Spring-loaded latch | 129 — Anti-rotation channel

Sequence: (a) Tank approaches with latch open (b) Neck ring engages latch (c) Fully locked, anti-rotation engaged

FIG. 5 — Tank Insertion Sequence