PROVISIONAL PATENT APPLICATION

Filed under 35 U.S.C. §111(b)

1. TITLE OF THE INVENTION

Full-Face Underwater Helmet with Integrated Side-Mount Tank, Magnetic Quick-Release Retention System, and Acoustic Exhaust Diffusion System

2. CROSS-REFERENCE TO RELATED APPLICATIONS

Related to co-pending provisionals: (1) "Portable Open-Mask Underwater Breathing System" (AquaPulse); (2) "Dual-Tank Body-Mounted Harness System" (HydroHarness) by the same inventor.

3. FIELD OF THE INVENTION

Full-face underwater breathing helmets with integrated side-mount compressed air tank, magnetic quick-release strap retention, and acoustic exhaust diffusion for recreational diving and underwater content creation (IPC: B63C 11/02, B63C 11/12).

4. BACKGROUND OF THE INVENTION

Existing full-face masks (Kirby Morgan, OTS Guardian, Interspiro Divator) weigh 1.0-1.8 kg, cost $1,500-$4,000+, designed for commercial/military use. Consumer full-face snorkel masks are surface-only. No product integrates: side-mounted tank, magnetic strap retention, acoustic exhaust management, and action camera mounting. Content creators need quiet, camera-ready, lightweight gear for shallow-water use.

5. SUMMARY OF THE INVENTION

- PC-GF20 or carbon fiber helmet shell (200) — 613g lightweight / 430g premium
- Full-face visor (202) with interchangeable tints, anti-fog, UV400
- GoPro-compatible camera mount (204) molded into shell
- Side-mounted 0.5L tank (206) via sealed bulkhead fitting (208) — NO external hoses
- MAGNETIC QUICK-RELEASE straps (210) — N52 neodymium, don/doff under 3 seconds
- ACOUSTIC EXHAUST DIFFUSER (212) — multi-port plate, 15-25 dB noise reduction
- Sealed communications port (214) for future modules

6. DETAILED DESCRIPTION

6.1 Helmet Shell

Shell (200): injection-molded PC-GF20 (lightweight, ~613g total) or vacuum-formed carbon fiber composite (premium, ~430g). Full-face coverage, smooth hydrodynamic contour. Interior comfort liner (220): 3mm EVA foam with moisture-wicking fabric, removable. 180° horizontal / 120° vertical vision. Shell thickness: 2.5-3.5mm PC, 1.5-2.5mm CF.

6.2 Full-Face Visor System

Visor (202): single-piece optically clear polycarbonate. Anti-fog hydrophilic interior coating, anti-scratch hardcoat exterior (3H pencil hardness), UV400. Compression-fit silicone gasket (Shore A 40-50) for tool-free removal. Five interchangeable tints: clear, smoke, amber, blue mirror, rose. Demist channel (252) routes air across visor interior.

6.3 Magnetic Quick-Release Strap Retention — KEY INNOVATION

NOVEL MECHANISM: No known prior art in diving equipment. Replaces buckle-and-strap systems.

Four ferromagnetic receiver plates (230): 316L stainless steel, 30mm diameter, 3mm thick, recessed flush into shell wall. Two at temples (crown strap 248), two at jaw (chin strap 250).

Four magnetic pucks (232): N52-grade neodymium magnets (highest commercial grade), 25mm diameter, 5mm thick. 3-5 kg perpendicular pull force per connection. Fully encapsulated in medical-grade silicone (234) — corrosion-proof in saltwater.

Straps (236): 25mm silicone-coated nylon webbing with sliding friction keeper. Crown strap (248) over top of head, chin strap (250) under chin. Adjustable 52-62cm head circumference.

Operation: Place helmet on head — magnetic pucks self-align and snap to receiver plates within 5-10mm proximity. Don time: under 3 seconds. Emergency release: firm perpendicular pull overcomes magnetic force instantly.

6.4 Integrated Side-Mount Tank — KEY INNOVATION

0.5L tank (206) mounts to right side of shell via snap-lock cradle (216). 15° forward cant for hydrodynamic balance.

PROPRIETARY SEALED BULKHEAD FITTING (208): Through-hull connection molded into shell wall. Exterior port accepts first-stage regulator (244) output. Dual O-ring seals (246) rated 15m+ depth. Interior port feeds second-stage demand valve (222).

Air path: Tank -> First-stage -> Bulkhead through shell wall -> Demand valve -> Interior breathing space. NO EXTERNAL HOSES. Eliminates snag hazards, improves hydrodynamics. Side-mount assembly adds ~180g. Tank replaceable underwater.

6.5 Acoustic Exhaust Diffuser — KEY INNOVATION

NOVEL APPROACH: Multi-port diffusion not previously applied to full-face dive masks.

Chin chamber (238): ~150 mL collection volume in lower chin area. Multi-port diffuser plate (212): PA66-GF30 + LSR membrane, 12-20 holes at 2-3mm diameter each. One-way mushroom valve (224) prevents water ingress during inhalation.

Principle: Many small holes -> many tiny 2-3mm bubbles instead of few large 5-15mm bubbles. Acoustic energy proportional to diameter squared — halving diameter reduces energy 4×. Estimated 15-25 dB noise reduction vs. single-port exhaust. Lateral dispersion keeps bubbles out of camera field of view.

6.6 Integrated Action Camera Mount

GoPro-compatible 3-prong mount (204) structurally molded into shell front-top. Center-forehead position for POV footage. Rated 30m+ depth. Optional secondary mount at right temple. Eliminates adhesive mount failures.

6.7 Communications Port

Sealed pass-through port (214) on left side. 4-pin wet-mate connector for future modules (comms, dive computer, LED). Waterproof blanking cap when unused.

8. ABSTRACT

A full-face underwater helmet for recreational diving and content creation, comprising a polycarbonate shell with integrated full-face visor, a side-mounted compressed air tank connected through a proprietary sealed bulkhead fitting, a magnetic quick-release strap retention system using encapsulated neodymium magnets for rapid don/doff, and an acoustic exhaust diffuser system employing a multi-port diffuser plate that disperses exhaled air into small bubbles to reduce noise. The helmet incorporates a structurally integrated GoPro-compatible camera mount, interchangeable tinted visor system, and sealed communication port. Total weight: ~613g lightweight, representing 40%+ reduction vs. existing commercial full-face dive masks.

INVENTOR

Samuel D'Agostino, Miami, Florida, United States

DISCLAIMER

This provisional patent application establishes a filing date and priority. It does not constitute a granted patent. Non-provisional must be filed within 12 months to preserve priority.

FIG. 1 — Front Isometric View of DRIFT Helmet

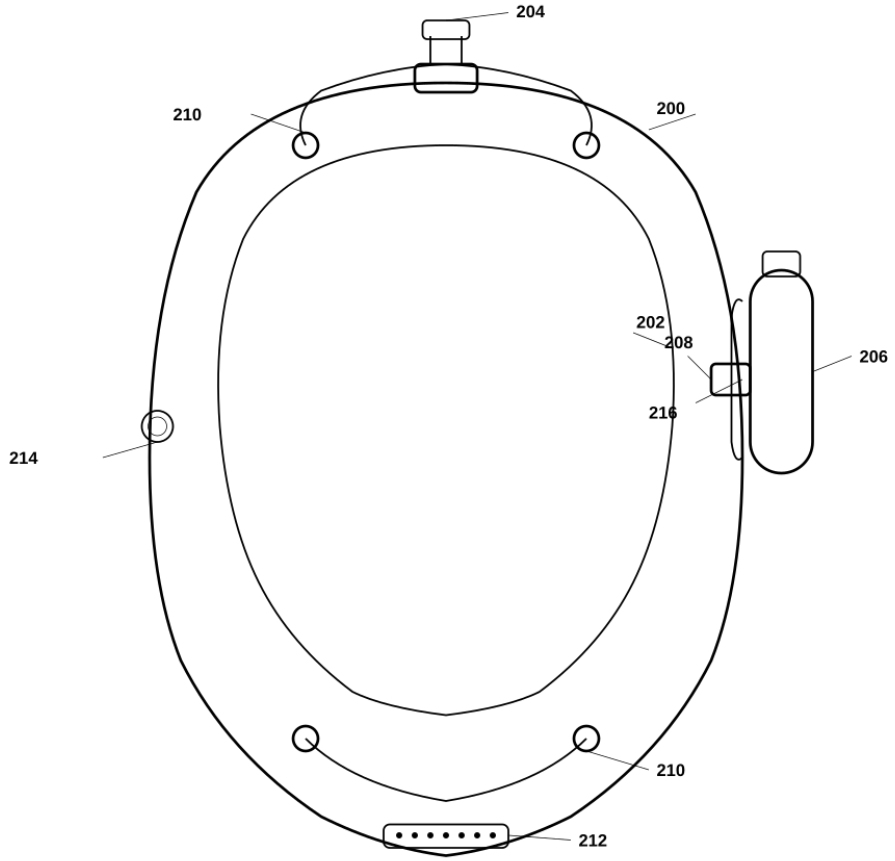

Reference Numerals:
200 — Helmet shell | 202 — Full-face visor | 204 — GoPro camera mount | 206 — 0.5L side-mount tank
208 — Sealed bulkhead fitting | 210 — Magnetic strap pucks | 212 — Acoustic exhaust diffuser
214 — Communications port | 216 — Tank cradle

FIG. 1 — Front Isometric View of DRIFT Helmet

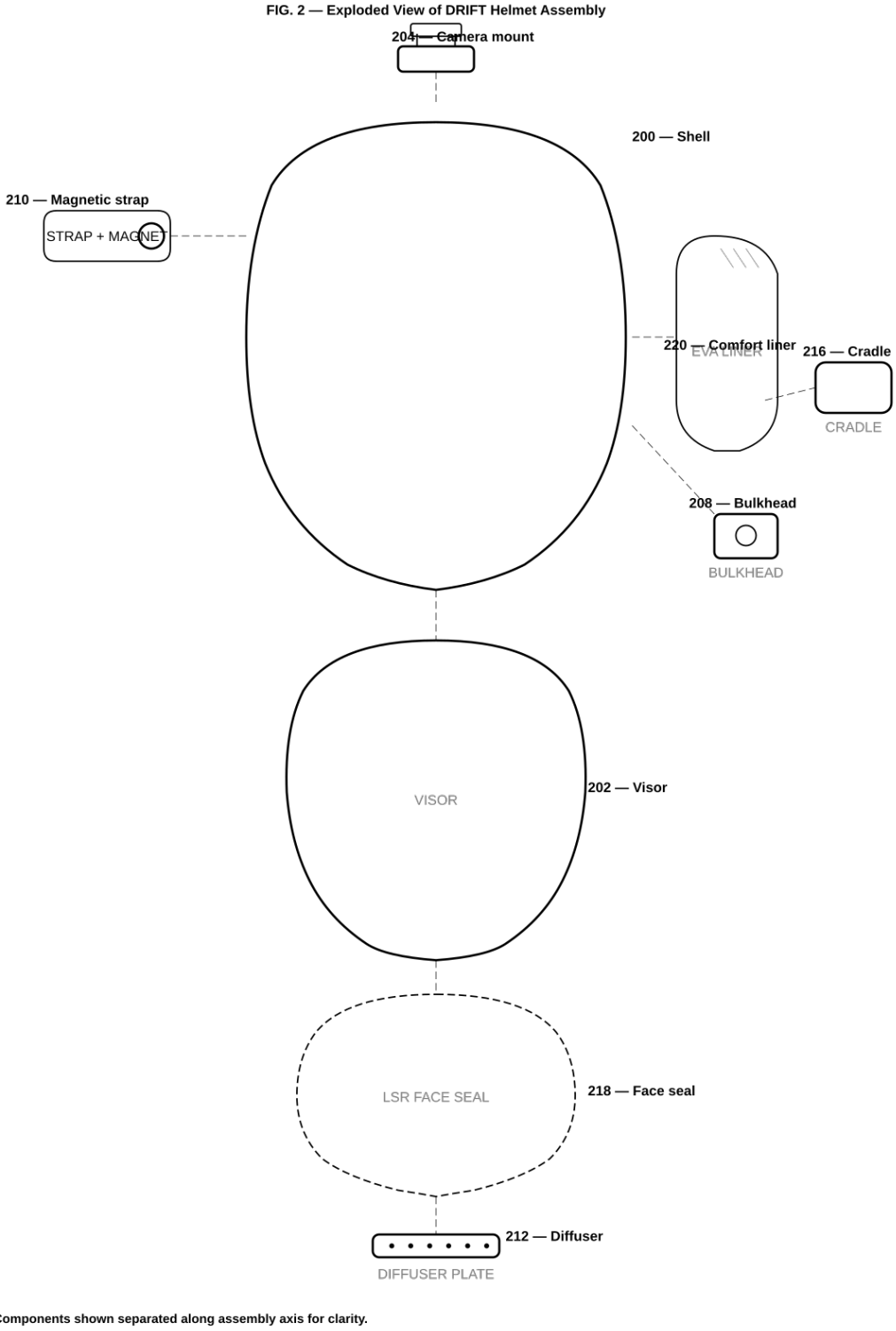

FIG. 2 — Exploded View of DRIFT Helmet Assembly

FIG. 3 — Cross-Section Side View (Air Path Detail)

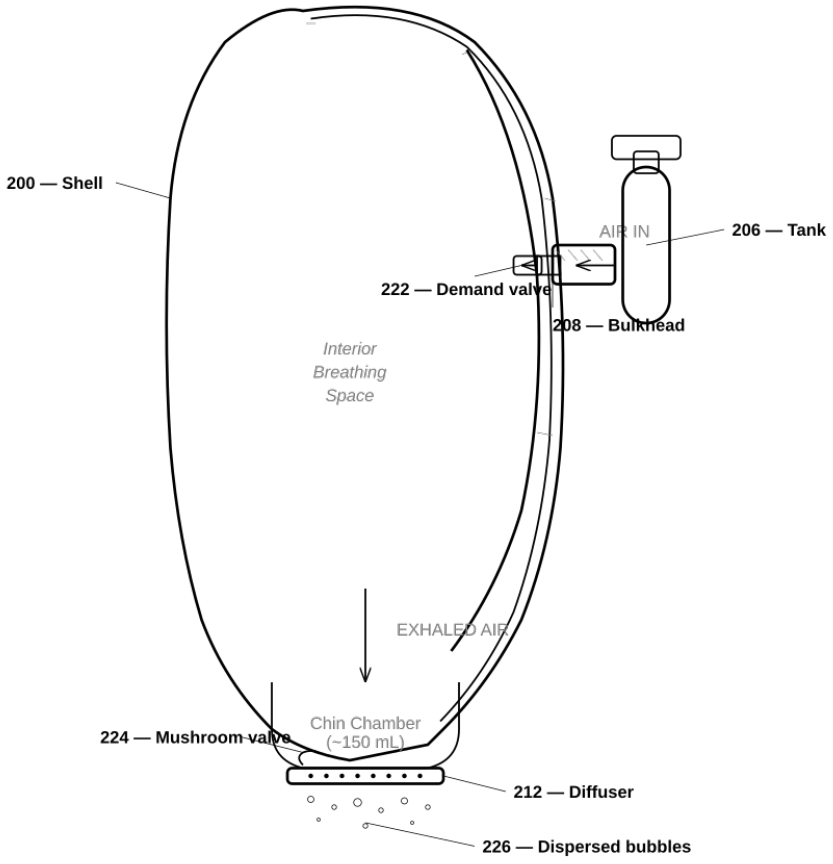

Air Path: Tank (206) → Bulkhead (208) → Demand valve (222) → Interior breathing space → Chin chamber → Diffuser (212) → Bubbles (226)
Cross-hatching indicates solid material in cross-section. Dashed lines indicate hidden/internal features.

FIG. 3 — Cross-Section Side View (Air Path and Exhaust Path)

FIG. 4 — Magnetic Quick-Release Strap Mechanism (Detail)

Operation: Strap terminal magnetic puck (232) snaps to ferromagnetic receiver plate (230) recessed in helmet shell (228).
N52 neodymium magnets encapsulated in medical-grade silicone (234) for saltwater corrosion resistance.
Release: deliberate perpendicular pull overcomes 3-5 kg magnetic force. Don/doff time: under 3 seconds.

FIG. 4 — Magnetic Quick-Release Strap Mechanism (Detail)

FIG. 5 — Acoustic Exhaust Diffuser System (Detail)

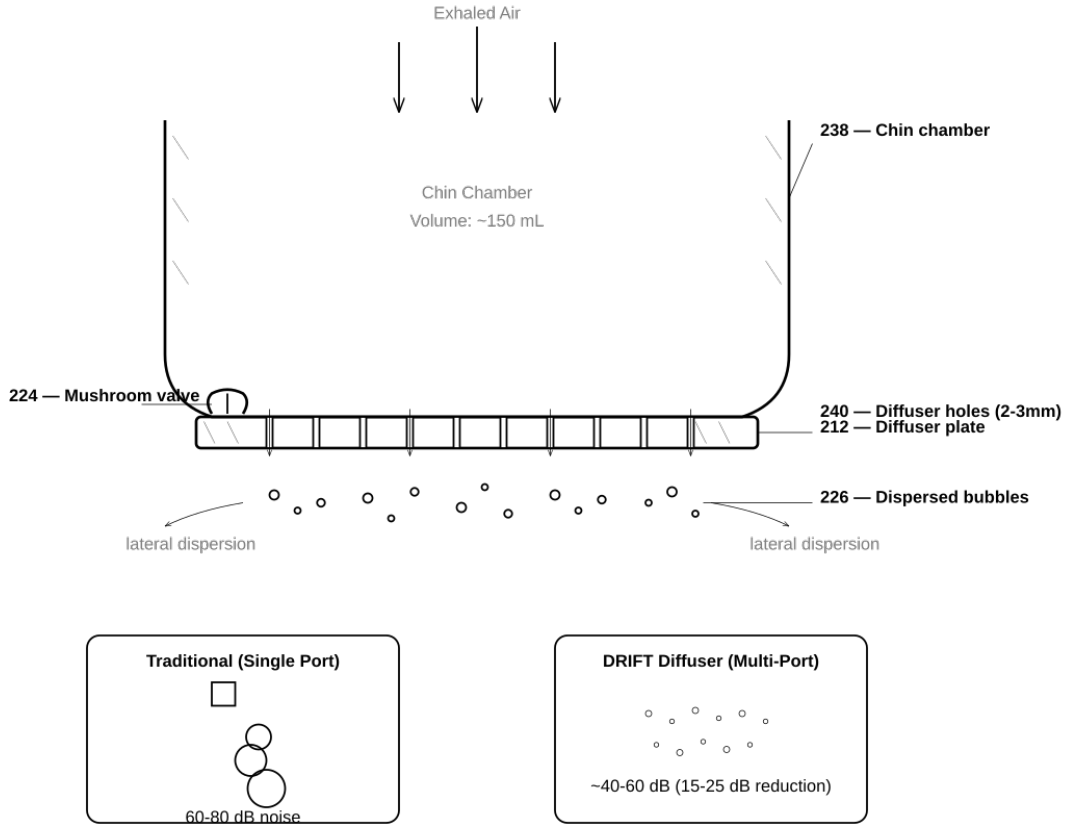

Noise Reduction Principle: Multiple small holes produce many tiny bubbles (lower acoustic energy) vs. single large port producing few large bubbles (higher a
Estimated noise reduction: 15-25 dB. Lateral bubble dispersion also keeps bubbles out of camera field of view.

FIG. 5 — Acoustic Exhaust Diffuser System (Detail)

FIG. 6 — Side-Mount Tank System (Detail Cross-Section)

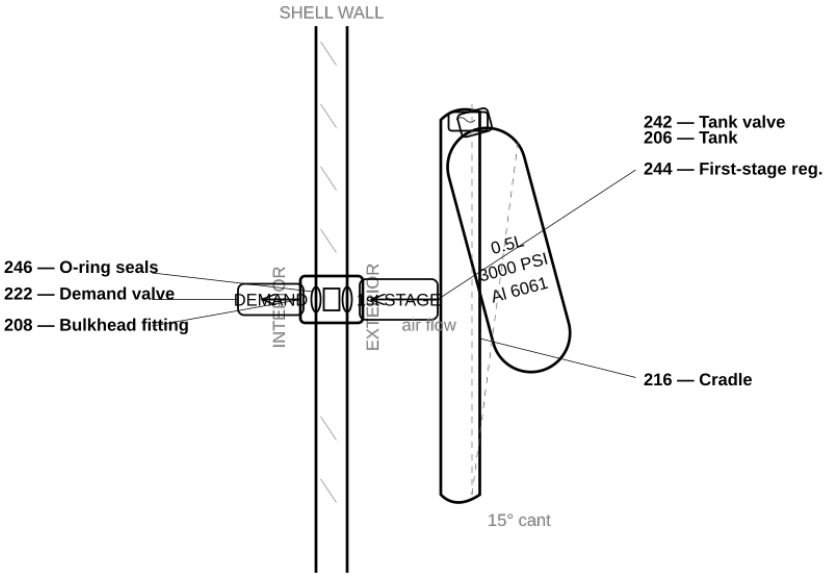

Air Path: Tank (206) → First-stage regulator (244) → Bulkhead fitting (208) with O-ring seals (246) → Demand valve (222) → Interior breathing space
No external hoses: air routes through the sealed bulkhead in the helmet shell wall. Tank replaceable underwater via snap-lock cradle (216).

FIG. 6 — Side-Mount Tank System (Detail Cross-Section)

FIG. 7 — Rear View of DRIFT Helmet

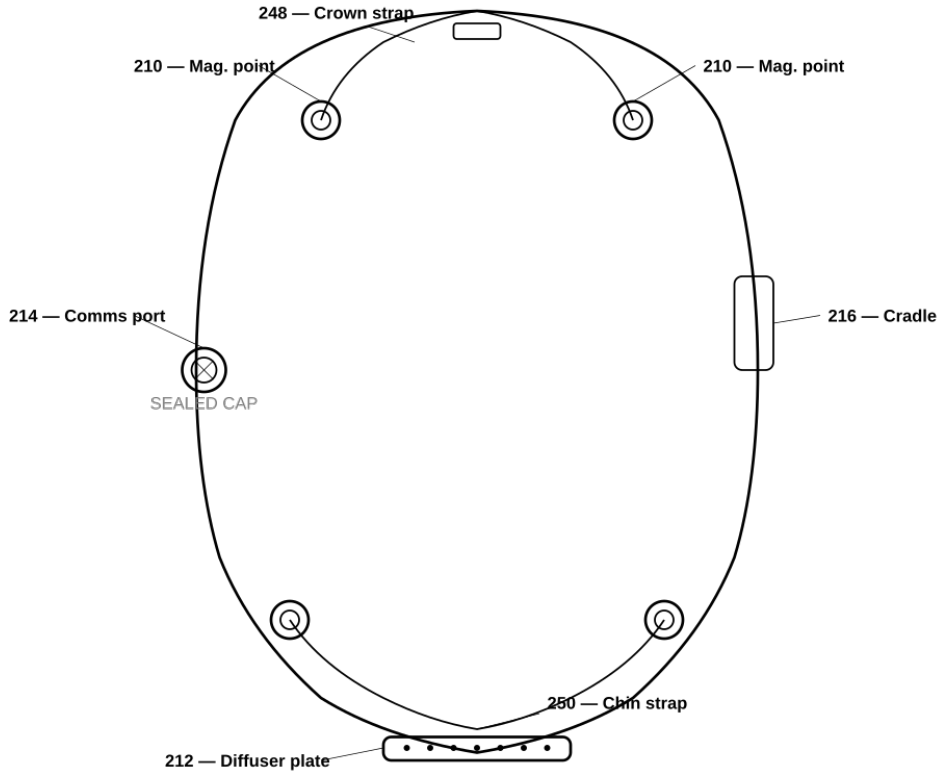

Four magnetic attachment points (210) shown: 2 on crown strap path, 2 on chin strap path.
Diffuser plate (212) positioned at bottom-rear for optimal bubble dispersion away from camera field of view.
Communications port (214) sealed with waterproof blanking cap. 4-pin wet-mate connector for future modules.

FIG. 7 — Rear View of DRIFT Helmet

FIG. 8 — Interchangeable Visor Tint System

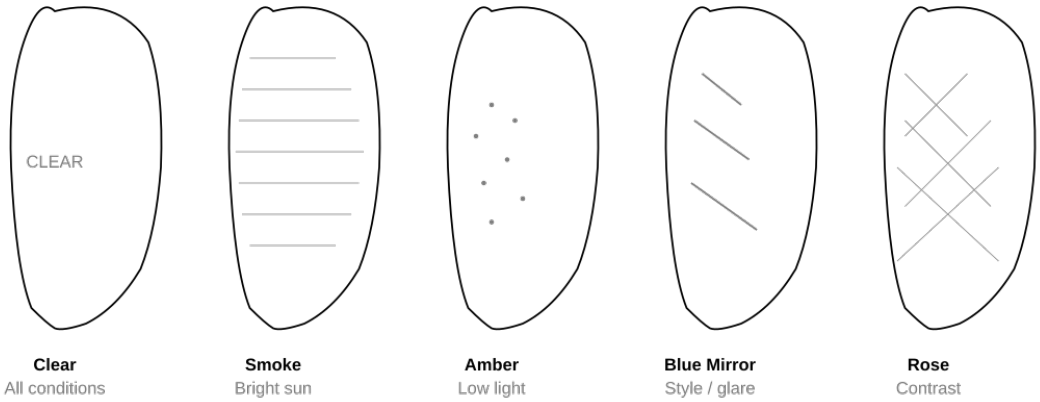

Tool-free visor swap via compression-fit silicone gasket

202 — Interchangeable visor panels (5 tint options shown)

All visors: optically clear polycarbonate, anti-fog interior, anti-scratch exterior, UV400 protection.
User swaps entire visor panel — no tools required. Gasket maintains watertight seal across all variants.

FIG. 8 — Interchangeable Visor Tint System